THE 45TH EDITION

K-Series | LH-Series | DLH-Series | Joist Girders

STANDARD SPECIFICATIONS

Load Tables and Weight Tables for Steel Joists and Joist Girders

SJI 100-2020 | American National Standard

The information presented in this publication has been developed by the Steel Joist Institute and is produced in accordance with recognized engineering principles and is for general information only. The SJI and its committees have made a concerted effort to present accurate, reliable, and useful information on the design of steel joists and Joist Girders. Application of this information should not be used or relied upon for any specific project without competent professional assessment of its accuracy, suitability and applicability by a licensed professional engineer or architect. The publication of the material contained in this catalog is not intended as a representation or warranty on the part of the Steel Joist Institute. Any person making use of this information does so at one's own risk and assumes all liability arising from such use.

Copyright © 2020

by

Steel Joist Institute

All rights reserved.This catalog or any part thereof must not be reproduced
in any form without the written permission of the Steel Joist Institute.

Cover photograph of Clemson University Allen N. Reeves Football Operations Complex courtesy of HOK Group, Inc.

Printed in the United States of America

First Printing – July 2020

CONTENTS

INTRODUCTIONS

ORGANIZATION

History 1
Policy 5
Membership 5
Publications, Presentations, Tools 6

SERIES

Introduction to K-Series, LH-Series, DLH-Series 7
Introduction to Composite Steel Joists, CJ-Series 10
Introduction to Joist Girders 11

DESIGN TOPICS

Joist Moment of Inertia and Deflection 12
Load/Load and SP Designations 13
Concentrated Loads at Joist Chords 15
Approximate Duct Opening Sizes 16
Minimum Shear 18

ACCESSORIES AND DETAILS

Bottom Bearing Details 19
Bridging Details 20

K-SERIES, LH-SERIES, DLH-SERIES, JOIST GIRDERS

STANDARD SPECIFICATIONS

Section 1. Scope & Definitions 21
2. Referenced Specifications, Codes and Standards 24
3. Materials 26
4. Design and Manufacture 28
5. Application 45
6. Erection Stability and Handling 58

Load Tables K-Series

K-Series LRFD Load Table – U. S. Customary Units 61
K-Series LRFD Load Table – Metric Units 66
K-Series ASD Load Table – U. S. Customary Units 70
K-Series ASD Load Table – Metric Units 75

Load Tables K-Series (continued)

KCS LRFD Load Table – U. S. Customary Units 79
KCS LRFD Load Table – Metric Units 81
KCS ASD Load Table – U. S. Customary Units 82
KCS ASD Load Table – Metric Units 84

Economy Tables

LRFD K-Series Economy Table – U. S. Customary Units 85
LRFD K-Series Economy Table – Metric Units 91
ASD K-Series Economy Table – U. S. Customary Units 95
ASD K-Series Economy Table – Metric Units 99

Top Chord Extensions (S-Type) and (R Type), K-Series 103

Joist Substitutes and Outriggers, K-Series 108

Load Tables LH-Series and DLH-Series

LH-Series LRFD Load Table – U. S. Customary Units 113
LH-Series LRFD Load Table – Metric Units 124
LH-Series ASD Load Table – U. S. Customary Units 135
LH-Series ASD Load Table – Metric Units 145
DLH-Series LRFD Load Table – U. S. Customary Units 156
DLH-Series LRFD Load Table – Metric Units 158
DLH-Series ASD Load Table – U. S. Customary Units 161
DLH-Series ASD Load Table – Metric Units 163

Weight Tables Joist Girders

Joist Girder LRFD & ASD Weight Tables - U. S. Customary 165

CODE OF STANDARD PRACTICE FOR STEEL JOISTS AND JOIST GIRDERS

Section 1. General 177
2. Joists, Joist Girders and Accessories 179
3. Materials 198
4. Inspection 199
5. Estimating 199
6. Plans and Specifications 200
7. Handling and Erection 202
8. Business Relations 203

GLOSSARY

Glossary 204

APPENDICES

Appendix A - Fire-Resistance Ratings 210

Appendix B - OSHA Steel Erection Standards

Bay Length Definitions 220

Part §1926.751 - Definitions 222

Part §1926.757 - Open web steel joists 223

OSHA Directive Number CPL 02-01-040 229

Illustration of OSHA Bridging Terminus Points 230

The following document contained in this catalog has been approved by the American National Standards Institute (ANSI):

Standard Specification for K-Series, LH-Series, DLH-Series Open Web Steel Joists and for Joist Girders (SJI 100-2020)

Approval of an American National Standard requires review by ANSI that the requirements for due process, consensus, and other criteria for approval have been met by the standards developer.

Consensus is established when, in the judgment of the ANSI Board of Standards Review, substantial agreement has been reached by directly and materially affected interests. Substantial agreement means much more than a simple majority, but not necessarily unanimity. Consensus requires that all views and objections be considered, and that a concerted effort be made towards their resolution.

The use of American National Standards is completely voluntary; their existence does not in any respect preclude anyone, whether he has approved the standards or not, from manufacturing, marketing, purchasing, or using products, processes, or procedures not conforming to the standards.

The American National Standards Institute does not develop standards and will in no circumstances give an interpretation of any American National Standard. Moreover, no person shall have the right or authority to issue an interpretation of an American National Standard in the name of the American National Standards Institute. Requests for interpretations should be addressed to the secretariat or sponsor whose name appears on the title page of this standard.

CAUTION NOTICE: This American National Standard may be revised or withdrawn at any time. The procedures of the American National Standards Institute require that action be taken periodically to reaffirm, revise, or withdraw this standard. Purchasers of American National Standards may receive current information on all standards by calling or writing the American National Standards Institute.

Copyright © 2020 by Steel Joist Institute
All rights reserved.

No part of this publication may be reproduced in any form, in an electronic retrieval system or otherwise, without prior written permission of the publisher.

Printed in the United States of America

STEEL JOIST INSTITUTE

HISTORY

Formed five years after the first open web steel joist was manufactured, the Institute has worked since 1928 to maintain sound engineering practice throughout our industry. As a non profit organization of active manufacturers, the Institute cooperates with governmental and business agencies to establish steel joist standards. Continuing research and updating are included in its work.

The first joist in 1923 was a Warren truss type, with top and bottom chords of round bars and a web formed from a single continuous bent bar. Various other types were developed, but problems also followed because each manufacturer had their own design and fabrication standards. Architects, engineers and builders found it difficult to compare rated capacities and to use fully the economies of steel joist construction.

Members of the industry began to organize the Institute, and in 1928 the first standard specifications were adopted, followed in 1929 by the first load table. The joists covered by these early standards were later identified as open web steel joists, SJ Series.

Other landmark adoptions by the Institute include the following:

1953
Introduction of Longspan Steel Joists, L Series. Specifications and a standard load table, covering spans through 96 feet and depths through 48 inches, were jointly approved with the American Institute of Steel Construction.

1959
Introduction of the S Series Joists, which replaced the SJ Series Joists. The allowable tensile stress was increased from 18,000 to 20,000 psi, joist depths were expanded through 24 inches, and spans increased through 48 feet.

1961
(a) Introduction of the J Series Joists, which replaced the S Series Joists. The allowable tensile stress was increased from 20,000 psi to 22,000 psi, based on the use of steel with a minimum yield strength of 36,000 psi.

(b) Introduction of the LA Series Joists, which replaced the L Series Joists. The LA Series Joists were designed to a maximum tensile stress of either 20,000 psi or 22,000 psi, depending on the yield strength of the steel.

(c) Introduction of the H Series Joists, whose design was based on steel with a minimum yield strength of 50,000 psi, and an allowable tensile stress of 30,000 psi.

1962
Introduction of the LH Series Joists, utilizing steel whose minimum yield strength was between 36,000 psi and 50,000 psi and an allowable tensile strength of 22,000 psi to 30,000 psi.

1965
Development of a single specification for both the J and H Series Joists by the Steel Joist Institute and the American Institute of Steel Construction.

1966
Development and introduction by the SJI and AISC of the LJ Series Joists, which replaced the LA Series Joists. Also, the development of a single specification for both the LJ and the LH Series Joists, with the use of 36,000 psi minimum yield strength steel for the LJ Series, and 36,000 psi to 50,000 psi minimum yield strength steel for the LH Series.

1970
Introduction of the DLJ and DLH-Series Joists to include depths through 72 inches and spans through 144 feet.

1971
Elimination of chord section number 2 and the addition of joist designations 8J3 and 8H3 to the load tables.

1972
(a) Adoption by the SJI and AISC of a single specification for the LJ , LH , DLJ , and DLH-Series Joists.

(b) Adoption by the SJI and AISC of the expanded specifications and load tables for Open Web Steel Joists with increased depths through 30 inches, and spans through 60 feet, plus adding chord section numbers 9, 10, and 11.

1978
(a) Elimination of the J , LJ , and DLJ Series Joists because of the widespread acceptance of high strength steel joists.

(b) Introduction of Joist Girders, complete with specifications and weight tables, in response to the growing need for longer span primary structural members with highly efficient use of steel.

1986
Introduction of the K-Series Joists, which replaced the H Series Joists. The reasons for developing the K-Series Joists were: (1) to achieve greater economies by utilizing the Load Span design concept; (2) to meet the demand for roofs with lighter loads at depths from 18 inches to 30 inches; (3) to offer joists whose load carrying capacities at frequently used spans are those most commonly required; (4) to eliminate the very heavy joists in medium depths for which there was little, if any, demand.

1994
(a) Introduction of the KCS Joists as a part of the K-Series Specification in response to the need for a joist with a constant moment and constant shear. The KCS Joist is an economical alternative joist that may be specified for special loading situations.

(b) Addition of metric nomenclature for all Joist and Joist Girder Series in compliance with government and industry standards.

(c) Addition of revised stability criteria.

2002
(a) Introduction of Joist Substitutes, K-Series.

(b) K-Series, LH- and DLH- Series and Joist Girder Specifications approved as American National Standards (ANSI).

(c) Revisions to K-Series Section 6, LH- and DLH-Series Section 105, and Recommended Code of Standard Practice for conformance to OSHA Steel Erection Standard §1926.757.

(d) Addition of Standing Seam Roof requirements to the K-Series Specification Section 5.8(g) and the LH-Series and DLH-Series Specification Section 104.9(g).

(e) Addition of Definition for Parallel Chord Sloped Joists – K-Series and LH-Series.

2005
(a) Major revision of K-Series, LH- and DLH-Series and Joist Girder Specifications to allow the design of joists and Joist Girders to be either in accordance with Load and Resistance Factor Design (LRFD) or Allowable Strength Design (ASD).

(b) Major revision of K-Series and LH- and DLH-Series Load Tables to be in both LRFD and ASD.

(c) Expansion of Joist Girder Weight Tables to spans through 120 feet.

(d) Code of Standard Practice was renamed.

2007
Introduction of the CJ-Series Composite Steel Joists, complete with specifications, weight tables and bridging tables, in response to the growing need to have a standard design specification for all member companies producing composite steel joists.

2010
(a) Expanded Range of Products

Most significant is the extension of the DLH-Series joist range from a maximum of 72 inches deep and 144 feet long to a maximum now of 120 inches deep and 240 feet long. In conjunction with the increased range, the standard camber for spans over 100 feet has been reduced and the LH-Series and DLH-Series Load Tables have been converted from a “Clearspan” to “Span” basis. An alternate “load/load” method of specifying Longspan joists has been introduced. Changes were also made with regard to Joist Substitutes and Top Chord Extensions.

(b) Substantial changes were made to the criteria for the spacing of bridging rows and the design of bridging. The changes make the criteria more cohesive between K-Series and LH-Series joists.

(c) A number of changes were made relative to bearing seat and end anchorage conditions, primarily incremental criteria rather than one standard for LH-Series and DLH-Series joists due to the broad range. In addition, design responsibilities are better defined and additional options for masonry bearing conditions are permitted.

(d) Several design criteria or checks that were already being performed but had not been shown in the specifications, are now included. These include node shear, girder top chord transverse bending, and weld design criteria. Based on SJI research, new criteria for crimped end angle webs have been applied.

(e) The Code of Standard Practice is updated with more discussion of the options available when specifying joist for non-uniform loads.

2015

(a) The three previous Specifications, K-Series, LH-Series and DLH-Series and Joist Girders, have been combined into one, unified Specification. Load Tables for each Series have not been combined and remain unchanged

(b) Adjustments were made to the k factors for web and bottom chord slenderness ratios.

(c) Several design criteria or checks that were already being performed but had not been shown in the specifications, are now included. These include uncrimped single angles and erection bridging.

(d) The joint eccentricity criteria have been updated.

(e) Minimum end anchorage requirements have been increased for uplift.

(f) When exact locations for concentrated loads are known, the joist shall be designed without the need for field applied web members.

(g) For both K-Series and KCS joists, bending stress can no longer be neglected for panels less than 24”. The top chord design criteria now match that of LH-Series and DLH-Series.

(h) The Code of Standard Practice has been reorganized, revised and updated, including additional information on uplift and end anchorage.

2020

(a) The LH-Series Load Tables have been expanded to incorporate shorter spans with higher uniform design loads as well as additional standard designations, particularly for floor systems. Because of these expanded LH-Series Load Tables, the Safe Load as well as the LH Load/Load weight tables are no longer needed and have been removed.

(b) LH-Series Load Tables layout has been reformatted to match the K-Series Load Tables.

(c) Tables outlining bearing conditions and bridging information have been updated to include the new LH-Series chord numbers.

(d) The Duct Opening Accessories page has been updated.

(e) Added page describing additional joist minimum shear criteria for web design.

POLICY

The manufacturers of any standard SJI products shall be required to submit design data for verification of compliance with Steel Joist Institute Specifications, undergo physical design verification tests, and undergo an initial plant inspection and subsequent biennial in-plant inspections for all products for which they wish to be certified.

SJI Member companies complying with the above conditions shall be licensed to publish the appropriate copyrighted SJI Specifications, Load Tables and Weight Tables.

MEMBERSHIP

Membership is open to manufacturers who produce, on a continuing basis, joists of the K Series, LH-Series, and DLH-Series, and/or Joist Girders, conforming to the Institute's Specifications and Load Tables. Membership requirements differ as described below.

APPLICATION PROCESS

The Institute's Consulting Engineer checks to see that designs conform to the Institute's Specifications and Load Tables. This comprises an examination of: (1) Complete engineering design details and calculations for selected designations for each type of materials and constructions; (2) Data obtained from physical tests of a limited number of joists, conducted by an independent laboratory, to verify conclusions from analysis of the applicant's engineering design details and calculations.

An initial plant inspection and subsequent biennial inspections are required to ensure that the applicant/member possesses the facilities, equipment and personnel required for proper manufacturing.

RESPONSIBILITY FOR PRODUCT QUALITY

The plant inspections are not a guarantee of the quality of any specific joists or Joist Girders; this responsibility lies fully and solely with the individual manufacturer.

SERVICES TO NONMEMBERS

The Institute's facilities for checking the design of K Series, LH Series, and DLH-Series Joists or Joist Girders are available on a cost basis.

The Steel Joist Institute does not check joist designs for specific construction projects. Manufacturing to Institute Specifications is the responsibility of the individual manufacturer.

PUBLICATIONS, PRESENTATIONS, TOOLS

Visit the SJI Web Site at **www.steeljoist.org** for a complete listing of SJI publications, presentations, and design tools.

1. Listings for SJI Webinar presentations, live and on-demand, and available for PDH credit are found on the website.

2. Catalog of Standard Specifications, Load Tables and Weight Tables and Code of Standard Practice for Steel Joists and Joist Girders

3. Catalog of Standard Specifications, Weight Tables, Bridging Tables and Code of Standard Practice for Composite Steel Joists.

4. The following **TECHNICAL DIGESTS** are also available from the Institute:
   - No. 3 Structural Design of Steel Joist Roofs to Resist Ponding Loads (2018)
   - No. 5 Vibration of Steel Joist – Concrete Slab Floors (2015)
   - No. 6 Design of Steel Joist Roofs to Resist Uplift Loads (2012)
   - No. 8 Welding of Open-Web Steel Joists and Joist Girders (2020)
   - No. 9 Handling and Erection of Steel Joists and Joist Girders (2008)
   - No. 10 Design of Fire-Resistive Assemblies with Steel Joists (2003)
   - No. 11 Design of Lateral Load Resisting Frames Using Steel Joists and Joist Girders (2007)
   - No. 12 Evaluation and Modification of Open Web Steel Joists and Joist Girders (2020)

5. 90 Year Download Open Web Steel Joist Construction (1928-2018)

6. The following DESIGN TOOLS are also available from the Institute:
   - Roof Bay Analysis Tool – With Ponding Analysis
   - Floor Bay Analysis Tool
   - Joist Girder Moment Connection Design Tools
   - Historical Load Tables

INTRODUCTION TO K-SERIES, LH-SERIES, DLH-SERIES

Open Web Steel Joists were primarily developed to provide structural support for floors and roofs of buildings. They possess the following advantages and features which have resulted in their wide use and acceptance throughout the United States and other countries.

First and foremost, they are economical. For many types of buildings, no other products or methods for supporting floors and roofs can compete with steel joists. The advantages listed in the following paragraphs all contribute to the overall economy of using Open Web Steel Joists.

Open Web Steel Joists are light in weight – they possess an exceptionally high strength-to-weight ratio in comparison with other building materials. Coupled with their low price per pound, they contribute significantly to lower building costs. An additional economy stemming from their light weight is the fact that the structural materials supporting the joists, such as beams and Joist Girders, columns, and the foundations themselves, can therefore be lighter, thus leading to even greater economies.

Open Web Steel Joists represent unitized construction. Upon arrival at the job site, the joists are ready immediately for proper installation. No forming, pouring, curing, or stripping is required. Furthermore, their light weight makes the erection procedure simple and fast.

The open webs in the joists permit the ready passage and concealment of pipes, ducts and electric conduits within the depth of the floor. In high rise buildings this can result in a reduced overall building height, which translates into considerable cost savings. As soon as the joists are erected and bridged, with ends properly attached, a working platform is available for the immediate follow-up of allied trades; this allows field work to progress rapidly and efficiently.

In combination with other materials, joists can provide fire resistive assemblies for both floors and roofs of buildings for nearly any hourly rating required. Appendix A, Fire Resistance Ratings, provides detailed information on this subject.

Joists can be used in all types, sizes or heights of buildings. They can be found in the roof of the neighborhood convenience store, big box retailer, school, church or synagogue, mid-rise hotel or hospital. Add to that warehouses, distribution centers plus many industrial applications.

K-Series Joists are standardized regarding depths, spans, and load-carrying capacities. There are 103 separate designations in the Load Tables, representing joist depths from 10 inches (254 mm) through 30 inches (762 mm) in 2 inch (51 mm) increments and spans through 60 feet (18,288 mm). Standard K-Series Joists have a 2 1/2-inch (64 mm) end bearing depth so that, regardless of the overall joist depths, the tops of the joists lie in the same plane. Seat depths deeper than 2 1/2-inch (64 mm) can also be specified.

Standard K-Series Joists are designed for simple span uniform loading which results in a parabolic moment diagram for chord forces and a linearly sloped shear diagram for web forces. When non-uniform and/or concentrated loads are encountered, the shear and moment diagrams required may be shaped quite differently and may not be covered by the shear and moment design envelopes of a standard K-Series Joist. When conditions such as this arise, a KCS (K-Series Constant Shear) Joist may be a good option. KCS Joists are designed in accordance with the Standard Specification for K-Series Joists with a few unique advantages.

KCS Joist advantages:

1. Provides a versatile K-Series Joist that can be easily specified to support uniform and non-uniform loads plus concentrated loads applied at panel points.
2. Eliminate many repetitive load diagrams required on contract documents and allow some flexibility of load locations.

KCS Joist chords are designed for a flat positive moment envelope. The moment capacity is constant at all interior panels. All webs are designed for a vertical shear equal to the specified shear capacity and interior webs will be designed for 100% stress reversal.

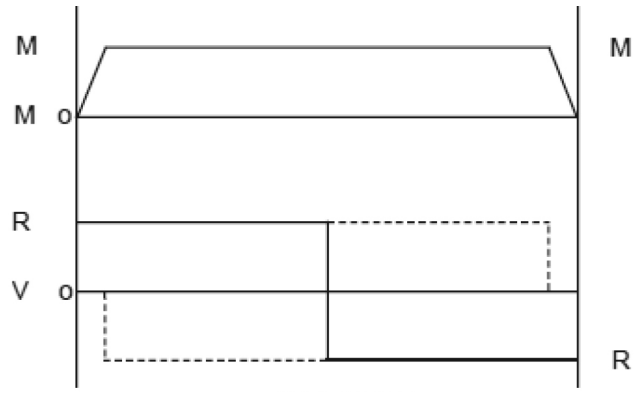

KCS JOIST
SHEAR AND MOMENT ENVELOPES

Both LRFD and ASD KCS Joist load tables list the shear and moment capacity of each joist. The selection of a KCS Joist requires the specifying professional to calculate the maximum moment and shear imposed and select the appropriate KCS Joist.

LH-Series Joists have been standardized in depths from 18 inches (457 mm) through 48 inches (1219 mm), for spans through 96 feet (29,260 mm).

DLH-Series Joists have been standardized in depths from 52 inches (1321 mm) through 120 inches (3048 mm), for spans up through 240 feet (73,152 mm).

LH-Series and DLH-Series Steel Joists can be furnished with either under-slung or square ends, with parallel chords or with single or double pitched top chords to provide sufficient slope for roof drainage. Square end joists are primarily intended for bottom chord bearing. Sloped parallel-chord joists shall use span as defined by the length along the slope. The joist designation is determined by its nominal depth at the center of the span and by the chord size designation.

The depth of the bearing seat at the ends of underslung LH-Series and DLH-Series Joists has been established at 5 inches (127 mm) for chord section number 2 through 17. A bearing seat depth of 7 1/2 inches (191 mm) has been established for the DLH-Series Joists chord section number 18 through 25.

Open Web Steel Joists are manufactured with standardized camber as given in Section 4.6.

For the proper handling of concentrated and/or varying loads, see Section 2.4 in the Code of Standard Practice for Steel Joists and Joist Girders.

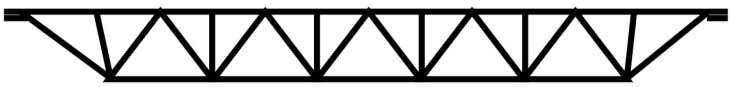

PARALLEL CHORDS, UNDERSLUNG

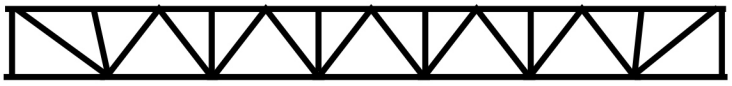

PARALLEL CHORDS, SQUARE ENDS

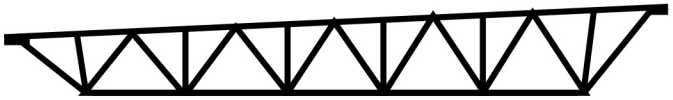

TOP CHORD PITCHED ONE WAY, UNDERSLUNG

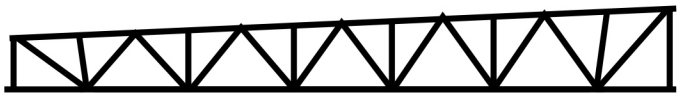

TOP CHORD PITCHED ONE WAY, SQUARE ENDS

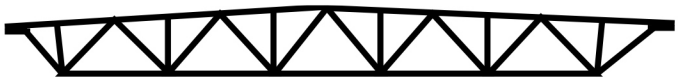

TOP CHORD PITCHED TWO WAYS, UNDERSLUNG

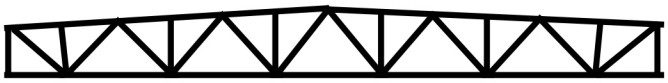

TOP CHORD PITCHED TWO WAYS, SQUARE ENDS

The illustrations above show modified Warren type web systems. However, the web systems may be any type, whichever is standard with the manufacturer furnishing the product.

INTRODUCTION TO COMPOSITE STEEL JOISTS, CJ-SERIES

Open Web Composite Steel Joists, CJ-Series, were developed to provide structural support for floors and roofs which incorporate an overlying concrete slab while also allowing the steel joist and slab to act together as an integral unit after the concrete has adequately cured.

The CJ-Series Joists are capable of supporting larger floor or roof loadings due to the attachment of the concrete slab to the top chord of the composite joist. Shear connection between the concrete slab and steel joist is typically made by the welding of shear studs thru the steel deck to the underlying CJ-Series Composite Steel Joist.

CJ-Series joists can provide an economical alternative to K-Series, KCS, or LH-Series joists when taking into account overall costs. Some potential advantages may include those listed below:

1. Reductions in overall floor to floor height of the structure.
2. Maximum span-to-depth ratios of 30 permit the use of shallower joists for any given span.
3. Efficient composite design makes it more economical to span greater distances. This results in larger column spacing, thus increasing the rental value of floor space.
4. Composite Steel Joists can be more efficient than other series depending on loading and span due to a potential reduction in the joist weight for any given joist depth. Lighter weight joists translate into potentially lighter weight columns and reduced foundation costs.
5. Live load deflections are significantly reduced. With the overlying concrete slab locked to the steel joist, the resulting composite action provides a stiffer floor system.
6. Efficient erection of the CJ-Series joist system reduces construction time and permits early occupancy of the building. Wider joist spacing reduces the number of joists to be erected and fireproofed.

The composite joist designation is determined by its nominal depth, the letters “CJ”, followed by the total uniform composite load, uniform composite live load, and finally the uniform composite dead load. Composite Steel Joists are furnished with parallel chords with either under-slung or square ends and act as pinned-pinned members. For specifications, load tables, and additional information to determine if CJ-Series may be suitable for your project, please refer to the latest edition of the *Steel Joist Institute Standard Specifications for Composite Steel Joists*.

INTRODUCTION TO JOIST GIRDERS

Joist Girders are open web steel trusses used as primary framing members. They are typically designed as simple spans supporting equally spaced concentrated loads for a floor or roof system. These concentrated loads are considered to act at the panel points of the Joist Girders. Joist Girders have been designed to allow for a growing need for longer span primary members, coupled with a need for more efficient steel usage.

These members have been standardized in the LRFD and ASD Weight Tables for depths from 20 inches (508 mm) to 120 inches (3048 mm), and spans to 120 feet (36,576 mm). Standardized camber is as shown in Section 4.6 of the Specifications. Joist Girders are furnished with underslung ends and bottom chord extensions. The minimum standard depth at the bearing ends has been established at 7 1/2 inches (191 mm) for all Joist Girders, and increases to 10" (254 mm) for high capacity joist girders. Joist Girders are usually attached to the columns by bolting with two 3/4-inch diameter (19 mm) bolts. A loose connection of the bottom chord to the column or other support is recommended during erection in order to stabilize the bottom chord laterally and to help brace the Joist Girder against possible overturning. A vertical stabilizer plate shall be provided on each column for the bottom chord of the Joist Girder. The stabilizer plate shall be furnished by other than the joist manufacturer.

CAUTION: If a rigid connection of the bottom chord is to be made to the column or other support, it shall be made only after the application of the dead loads. The Joist Girder is then no longer simply supported and the system must be investigated for continuous frame action by the specifying professional.* Bearing details of joists on perimeter Joist Girders, or interior Joist Girders with unbalanced loads, should be designed such that the joist reactions pass through the centroid of the Joist Girder.

The Weight Tables list the approximate weight in pounds per linear foot (kiloNewtons per meter) for a Joist Girder supporting the concentrated panel point loads shown. Please note that the weight of the Joist Girder must be included in the panel point load (See Code of Standard Practice for Steel Joists and Joist Girders, Section 2.4 for examples).

For calculating the approximate deflection or checking for ponding, the following formulas in U. S. Customary Units and Metric Units may be used in determining the approximate moment of inertia of a Joist Girder.

I_{JG} = 0.027 NPLd: where N = number of joist spaces;

P = Total panel point load in kips (unfactored); L = Joist Girder length in feet; and d = effective depth of the Joist Girder in inches, or,

I_{JG} = 0.3296 NPLd: where N = number of joist spaces;

P = Total panel point load in kiloNewtons (unfactored); L = Joist Girder length in millimeters and d = effective depth of the Joist Girder in millimeters.

The Joist Girder manufacturer should be contacted when a more exact Joist Girder moment of inertia must be known.

* For further reference, refer to Steel Joist Institute Technical Digest Number 11, "Design of Lateral Load Resisting Frames Using Steel Joists and Joist Girders".

JOIST MOMENT OF INERTIA AND DEFLECTION

The moment of inertia of K-Series, LH-Series and DLH-Series joists in the load table can be estimated using the following equations:

$I_J = 26.767\ (W)\ (L^3)\ (10^{-6})$ ASD, US Customary Units with W in plf and L = Span – 0.33 in feet

$I_J = 2.6953\ (W)\ (L^3)\ (10^{-5})$ ASD, Metric Units with W in kN/m and L = Span -102 in mm

The equations shown above provide an approximate "gross" moment of inertia, not including the effects of shear deformation. An open web steel joist can be expected to have approximately 15 percent more deformation than a solid web member. When a conventional beam formula is used to calculate joist deflection, a factor of 1.15 should be applied to account for the web shear deformation.

Example:

Find the Inertia for a 24K7 @ 40'-0":

SJI tables 253 / 148

$I_J = 26.767\ (W)\ (L^3)\ (10^{-6})$ where W = RED figure in the Load Table and L = (Span – 0.33) in feet.

$I_J = 26.767(148)\ (40\text{-}0.33)^3(10^{-6}) = 247\ in^4$

Compute Joist Deflection:

Increase deflection 15% to account for shear deformation in webs.

$(1.15)(5WL^4/384EI)$

$(1.15)(5)(148/12)\ [(40\text{-}.33) \times 12)]^4 / [(384)(29 \times 10^6)\ (247)] = 1.32"$

Verify the RED number represents the joist loading that produces L/360 deflection

$L/360 = (40\text{-}.33) \times 12/360 = 1.32"$

The 15 percent approximation also applies to the deflection equations when using the Joist Girder moment of Inertia equations.

Having determined the moment of inertia and live load deflection requirements, it is not typically necessary to specify a total load deflection limit. K-Series, LH-Series, DLH Series and Joist Girders are fabricated with camber, (ref. SJI 100 sect 4.6), and since these are steel structural members, 2018 IBC Table 1604.3 note G states the dead load shall be taken as zero in determining the total load deflection.

LOAD/LOAD AND SP DESIGNATIONS

Specification Section 1.4 “Definitions” provides an alternate method of specifying standard K-Series, LH-Series, or DLH-Series joists by permitting the joist designation to be provided in a “load/load” sequence in lieu of the using the SJI Load Table Section Numbers. The format for a standard joist designation using the SJI Load Table Section Number is, for example 28K9, 36LH12, or 60LH18. The format for a joist designation using the “load/load” method is ddKtl/ll, ddLHtl/ll, or ddDLHtl/ll where:

dd is the nominal depth of the joist in inches, (mm)

tl is the total uniformly distributed load applied to the joist top chord, plf (KN)

ll is the uniform live load for which the deflection shall be checked and limited as required by the SJI-100 Specification, plf (KN)

Refer to Specification section 1.4 for the range of permissible depths and spans for each Series.

This “load/load” method provides the advantages of ease of specifying and some economy where the required load capacity falls between two standard designation chord numbers. However, care and consideration is required to properly communicate the scope of the total load. In some cases, particularly where seismic loads are involved, a simple designation of the format ddKSP, ddLHSP, or ddDLHSP may be more appropriate, where “SP” refers to a loading schedule or diagrams.

Consider as an example: **24K250/150** ASD, spaced 5’-0” center to center.

For this example, the 250 plf total load could represent a dead load of 20 psf and a live load of 30 psf. That represents just one of several possible load combinations. If it is indeed the controlling downward load combination, then this is a valid designation.

Other combinations of load may control, such as dead load, live load, and downward wind pressure. The Specifying Professional shall utilize a designation based on the maximum uniform load resulting from all applicable load combinations, or shall clearly indicate what additional loads or loading combinations need to be considered by the Joist Manufacturer.

Consider three examples, all ASD and 5 feet center-to-center spacing:

Example 1:

20 psf dead load, 30 psf live load, 16 psf downward wind

DL + LL = 50 psf ← controls 50 psf x 5’-0” = 250 plf TL

DL + 0.75(LL + 0.6WL) = 49.7 psf

Hence, a designation 24K250/150 is adequate and no further instruction to the Joist Manufacturer is required.

Example 2:

20 psf dead load, 20 psf live load, 20 psf downward wind

DL + LL = 40 psf

DL + 0.75(LL + 0.6WL) = 44 psf ← controls 44 psf x 5'-0" = 220 plf TL

Thus, the designation 24K220/120 can be utilized.

Example 3:

20 psf dead load, 20 psf live load, 20 psf downward wind

DL + LL = 40 psf 40 psf x 5'-0" = 200 plf TL

A designation 24K200/100, based solely upon DL + LL could be utilized, along with a specific instruction to the Joist Manufacturer to also consider a downward wind pressure of 20 psf. However, a general reference to ASCE, or wind load charts in the design loads section of structural contract drawings is not adequate. An instruction should be given in the joist notes or on the framing plan.

Note that when seismic loads are present and there are additional load combinations to be considered, a joist loading chart or schedule provides the detail required for the Joist Manufacturer to properly construct the required load combinations. A designation such as 24KSP can be used where "SP" provides an indication that the loading information is to be found in a diagram or schedule.

See the SJI Code of Standard Practice for further details about Load Schedules and guidance on how the specifying professional must calculate and provide the design loads.

CONCENTRATED LOADS AT JOIST CHORDS

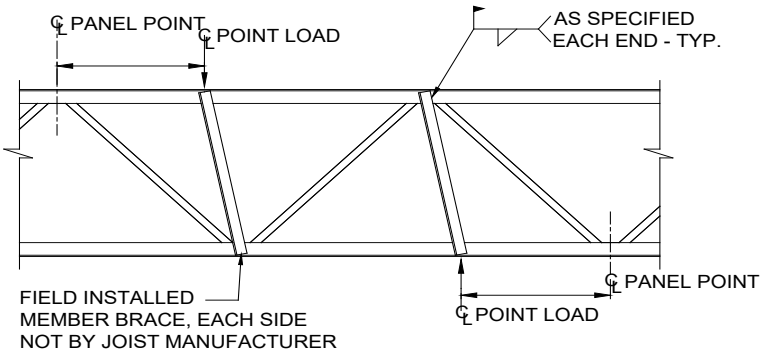

TYPICAL JOIST REINFORCMENT AT CONCENTRATED LOADS

For nominal concentrated loads between panel points, which have been accounted for in the specified uniform design loads, a "strut" to transfer the load to a panel point on the opposite chord shall not be required, provided the sum of the concentrated loads within a chord panel does not exceed 100 pounds and the attachments are concentric to the chord.

Although standard K-Series, including KCS joists, and standard LH-Series and DLH-Series joists are designed specifically to support uniformly distributed loads applied to the top chord, research conducted by the Steel Joist Institute, using second-order inelastic analysis, has demonstrated that the localized accumulation of uniform design loads of up to 100 pounds within any top or bottom chord panel has a negligible effect on the overall performance of the joist, provided that the load is applied to both chord angles in a manner which does not induce torsion on the chords.

Concentrated loads in excess of 100 pounds or which do not meet the criteria outlined above, must be applied at joist panel points, or field strut members must be utilized as shown in the detail above.

When exact dimensional locations for concentrated loads are provided by the specifying professional, the joist manufacturer will design the joist for the loads and load locations provided without the need for additional field applied web members at the specified locations.

For a traveling load with no specific location, the manufacturer can consider the worst case for both the shear and bending moment. When a traveling load is specified, the contract drawings should indicate whether the load is to be applied at the top or bottom chord, and at any panel point, or at any point with the local bending effects considered. For additional information see SJI Code of Standard Practice, Section 2.4 – Specifying Design Loads.

APPROXIMATE DUCT OPENING SIZES

An advantage of open web steel joists and Joist Girders over solid web members is the ability to pass mechanical ducts, plumbing and electrical conduits through the open webs. In floor applications, this aspect can be used to minimize floor-to-floor heights. Ideally, ducts would run through the standard web panel configurations for optimal structural efficiency.

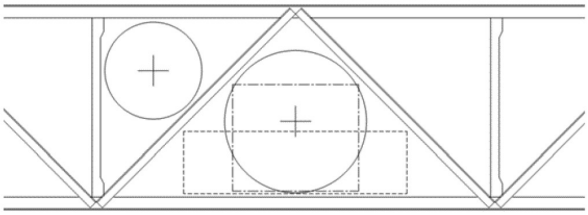

The following chart shows general guidelines for maximum duct sizes in the large web opening using typical chord and web sizes with standard web configurations. Although SJI manufacturers may differ in member sizes and configurations, these sizes have been confirmed by all SJI manufacturers. However, the manufacturer must be contacted to confirm final dimensions, including duct size and location. When passing ductwork through the joist, the specified minimum opening must account for insulation on the duct, spray applied fire proofing on the joist, or other criteria as applicable, in addition to the duct size.

Joist Depth (inches)	Panel length (inches)	Round (inches)	Square (inches)	Rectangle (inches)
10	19*	5	4	3x7
12	19*	6	5	4x7
14	19*	7	6	5x7
16	19*	8	6	6x7
18	24*	9	7	6x9
20	24*	10	8	6x11
22	24*	10	9	7x11
24	24*	12	10	7x13
18	48	10	8	6x18
20	48	10	8	7x18
22	48	10	9	8x18
24	48	12	10	8x19
26	48	15	12	9x19
28	48	16	13	10x18
30	48	17	14	11x19
32	64	20	16	11x25
36	72	24	18	13x29
40	80	26	22	14x32
44	88	28	23	17x36
48	96	32	26	19x40

* FOR JOISTS BUILT WITH BENT ROD WEB CONFIGURATION.
The Specifying Professional must indicate on the structural drawings the size and location of any duct opening that is to pass through joist. For deeper LH- and DLH-Series joists, consult manufacturer.

If ducts must pass through two or more adjacent joists, the joist manufacturer must also be alerted so that the joist web configurations can be aligned.

Vierendeel Openings

For conditions requiring larger web openings at specific locations, a special joist design leaving out certain diagonal web(s) may be needed. This can be accommodated by the joist manufacturer and is typically referred to as a Vierendeel opening. The manufacturer must be contacted to confirm final dimensions, including duct size and location. Both the specifying professional and the joist manufacturer have special criteria to consider when specifying and designing joists with Vierendeel openings.

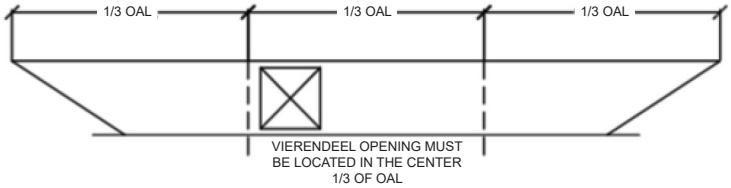

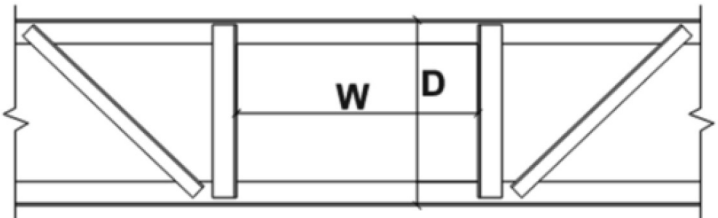

Maximum Vierendeel Opening W = 2 x D

General Guidelines for the Specifying Professional

- Maximum opening depth: Subtract 6”-12” from the joist depth to account for increased chord sizes.
- Maximum opening width: 2 x joist depth, but keep as narrow as necessary.
  Note: The maximum dimensions provided above are general guidelines, and include consideration for joist chord, web and reinforcement material. However, the joist manufacturer must be contacted to confirm final dimensions.
- If passing ductwork through the joist, the specified minimum opening must account for insulation, spray applied fire proofing on the joist, etc., as applicable, in addition to the duct size.
- Locate openings in the center third of the joist span.
- Multiple openings within a single joist span should be avoided. If required, a minimum space of twice the joist depth must be maintained between openings to allow for transfer of shear forces.

Design Considerations by the Joist Manufacturer

- Chord design must account for bending moments developed in transferring shear across an opening without diagonal web members. This commonly requires larger chords or chord reinforcing.
- The vertical webs at each edge of the opening may be designed as pinned-end members or as moment-frame members. If designed as moment frame members, these webs will likely also be reinforced and will likely require special moment connections to the chord members.
- Partial span loading effects on member forces in the region around the opening must be considered.
- To avoid interference from bridging and bridging clips, bridging lines should be located outside the openings. This may increase the number of bridging rows to adequately brace the joist.

MINIMUM SHEAR

Steel Joist Institute (SJI) specifications have a history of including minimum shear criteria for design of web members. The minimum shear criteria is intended to address the potential for loading variations due to partial span loading or from minor accumulation of uniformly distributed loads.

SJI has adopted more stringent minimum shear criteria for open web steel joists with uniformly distributed design loading. The specification continues to require a minimum shear of 25% of end reaction. Additionally, the SJI member companies design the webs for shear envelopes defined by 75% of uniform design loads assumed to be partial span loading of any length and location along the joist span, combined with full span loading of the remaining 25% of uniform design loads. The SJI anticipates formally incorporating this change in the next Specification update.

The new minimum shear criteria for joist design is as follows:

The vertical shears to be used in the design of the web members shall be determined by including all loads, but such vertical shears shall be not less than 25 percent of the maximum end reaction from the design load combinations.

For joists only, excluding KCS-Series, the web members shall also be designed for a vertical shear, based only on the uniform load, of not less than magnitude V:

$$V = 0.75\ ER\ (1-X_{pe}/L)^2 + 0.25\ (ER-2\ X_{pe}\ ER/L) \qquad \text{lbs. (kN)}$$

Where:

ER = End reaction based on the maximum uniform design total load occurring across the full length of span, not including any other design loads, lbs. (kN)

L = joist design length between end reaction working points = (Span-0.33), ft or (Span-102) mm

X_{pe} = distance from the end reaction work point, to the panel point nearest this end reaction to which the web connects, $X_{pe} < L/2$, ft. (mm)

For stress reversal, the joist tension web members, except for KCS-Series, shall be designed for an axial compression force due to a vertical shear of magnitude V:

$$V = 0.75\ ER\ (X_{pc}/L)^2 - 0.25\ (ER-2\ X_{pc}\ ER/L) \quad \text{only if } V > 0, \text{ lbs. (kN)}$$

Where:

X_{pc} = distance from the end reaction work point, to the panel point nearest joist centerline to which the web connects, $X_{pc} <= L/2$, ft. (mm)

BOTTOM BEARING DETAILS

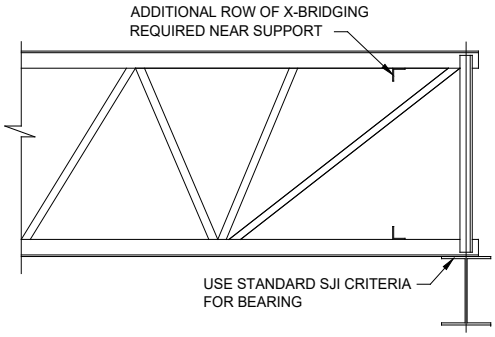

SQUARE ENDED, BOTTOM BEARING

Whenever joists are bottom chord bearing, diagonal cross bridging must be installed from joist to joist at or near the bearing location to provide additional lateral erection stability.

Note: Joist configuration and member size may vary.

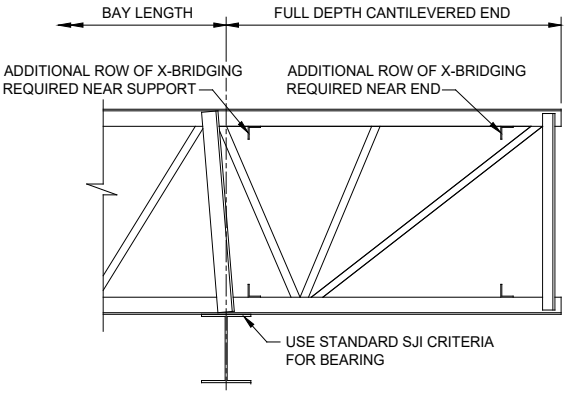

CANTILEVERED, BOTTOM BEARING, SQUARE END

The weight of walls, signage, fascia, etc. supported at the end of a cantilever square end must be shown on the contract drawings to be properly considered in the joist design.

Note: Joist configuration and member size may vary.

BRIDGING DETAILS

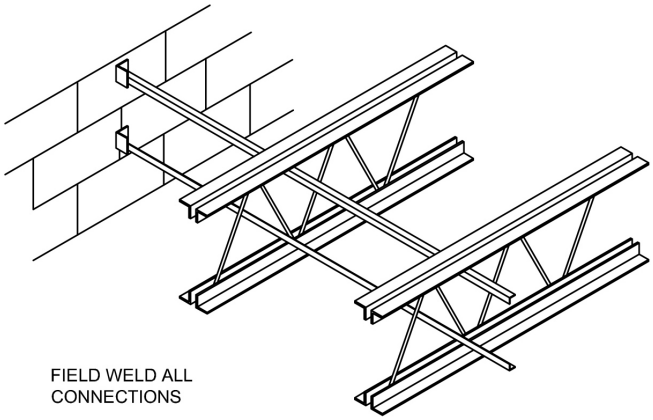

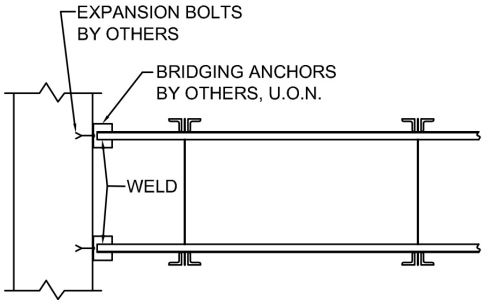

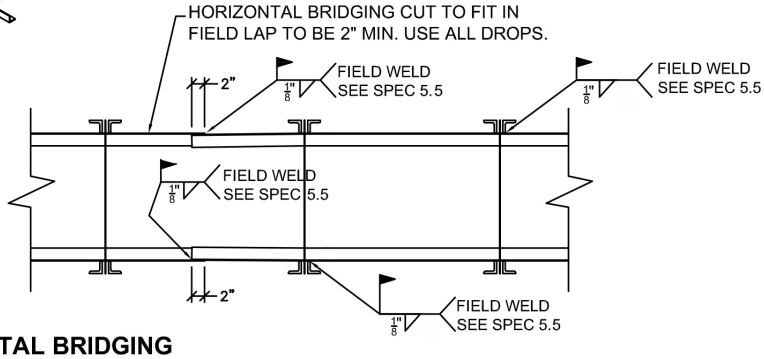

HORIZONTAL BRIDGING
SEE SJI SPECIFICATIONS

NOTE: DO NOT WELD BRIDGING TO JOIST WEB MEMBERS. DO NOT HANG ANY MECHANICAL, ELECTRICAL, ETC. FROM BRIDGING.

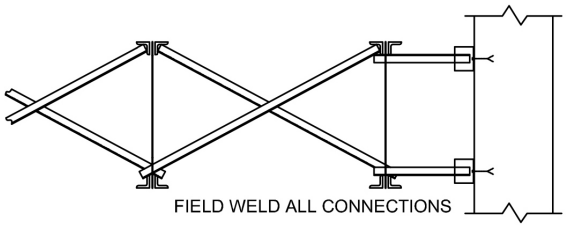

WELDED CROSS BRIDGING

HORIZONTAL BRIDGING SHALL BE USED IN SPACE ADJACENT TO THE WALL TO ALLOW FOR PROPER DEFLECTION OF THE JOIST NEAREST WALL.

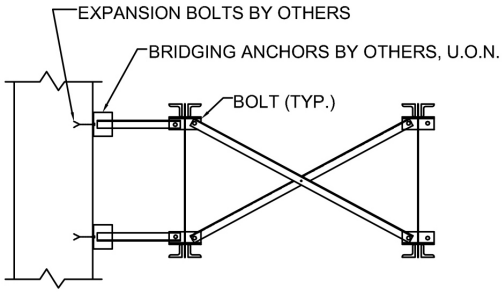

BOLTED CROSS BRIDGING

(a) HORIZONTAL BRIDGING UNITS SHALL BE USED IN THE SPACE ADJACENT TO THE WALL TO ALLOW FOR PROPER DEFLECTION OF THE JOIST NEAREST THE WALL.

(b) FOR REQUIRED BOLT SIZE REFER TO BRIDGING TABLE. NOTE: CLIP CONFIGURATION MAY VARY FROM THAT SHOWN.

STANDARD SPECIFICATION

FOR K-SERIES, LH-SERIES, AND DLH-SERIES OPEN WEB STEEL JOISTS AND FOR JOIST GIRDERS.

K-Series Adopted by the Steel Joist Institute November 4, 1985
LH/DLH-Series Adopted by the Steel Joist Institute May 10, 2006
Joist Girders Adopted by the Steel Joist Institute November 4, 1985
Revised to April 27, 2020, Effective July 1, 2020

SECTION 1.
SCOPE AND DEFINITIONS

1.1 SCOPE

The *Standard Specification for* K-*Series*, LH-*Series,* DLH-*Series Open Web Steel Joists and for Joist Girders*, hereafter referred to as the Specification, covers the design, manufacture, application, and erection stability and handling of Joist Girders and Open Web Steel Joists K-Series, LH-Series, and DLH-Series in buildings or other structures, where other structures are defined as those structures designed, manufactured, and erected in a manner similar to buildings. Joist Girders and K-Series, LH-Series, and DLH-Series joists shall be designed using Allowable Stress Design (ASD) or Load and Resistance Factor Design (LRFD) in accordance with this Specification. Included as part of this Specification are KCS joists, K-Series; Joist Substitutes, K-Series; and Top Chord Extensions and Extended Ends, K-Series.

1.2 OTHER REGULATIONS

Joist Girders and K-Series, LH-Series, and DLH-Series joists shall be erected in accordance with the Occupational Safety and Health Administration (OSHA), 29 CFR Part 1926, Safety Standards for Steel Erection, Subpart R – Steel Erection. The erection of Joist Girders and K-Series, LH-Series, and DLH-Series joists 144 ft. (43.9 m) or less in length shall be in accordance with the requirements of Section 1926.757, Open Web Steel Joists. Joist Girders and DLH–Series joists greater than 144 ft. (43.9 m) in length shall be in accordance with the requirements of Section 1926.756 Beams and Columns.

1.3 APPLICATION

This Specification includes Section 1 through Section 6. The user notes shall not be part of the Specification.

User Note: User notes are intended to provide practical guidance in the use and application of this Specification.

1.4 DEFINITIONS

The following terms shall, for the purposes of this Specification, have the meanings shown in this Section. Where terms are not defined in this Section, those terms shall have their ordinary accepted meanings in the context in which it applies.

Joist Girders, K-Series, LH-Series, and DLH-Series shall be open web, in-plane load-carrying steel members utilizing hot-rolled or cold-formed steel, including cold-formed steel whose yield strength has been attained by cold working.

Joist Girders shall be open web steel trusses used as primary framing members designed as simple spans supporting in-plane concentrated loads for a floor or roof system. These concentrated loads shall be considered to act at the top chord panel points of the Joist Girders unless otherwise specified.

The Joist Girder standard designation in ASD shall be established by its nominal depth in inches (mm), the letter “G”, followed by the number of joist spaces, the letter “N”, the load in kips (kN) at each panel point, and the letter “K”. The Joist Girder standard designation in LRFD shall be established by its nominal depth in inches (mm), the letter “G”, followed by the number of joist spaces, the letter “N”, the factored load in kips (kN) at each panel point, and the letter “F”. Joist Girders shall be designed in accordance with this Specification to support the loads defined by the specifying professional.

Joist Girders shall be designed and manufactured as either simple framing members with underslung ends and bottom chord extensions or as part of an ordinary steel moment frame (OMF). Where used as part of an OMF the specifying professional shall be responsible for carrying out all the required frame analyses (i.e. first-order and second-order), provide all the required load information and stiffness data to the joist manufacturer, and indicate the type of **Joist Girder** to column connections that are being designed on the structural drawings.

User Note: Joist Girders have been standardized in depths from 20 inches (508 mm) through 120 inches (3048 mm), for spans from 20 feet (6096 mm) through 120 feet (36576 mm).

Where this Specification refers to “steel joists”, this shall mean the K-Series, LH-Series, and DLH-Series joists.

User Note: Joists are suitable for the direct support of floors and roof slabs or decks. The K-Series joists are standardized in depths from 10 inches (254 mm) through 30 inches (762 mm), for spans up through 60 feet (18288 mm). The LH-Series joists are standardized in depths from 18 inches (457 mm) through 48 inches (1219 mm), for spans up through 96 feet (29261 mm). The DLH-Series joists are standardized in depths from 52 inches (1321 mm) through 120 inches (3048 mm), for spans up through 240 feet (73152 mm).

The K-Series, LH-Series and DLH-Series standard joist designations shall be established by their nominal depth, followed by the letters K, LH or DLH as appropriate, and then by the Section Number designation assigned. The Section Number designations shall range from 01 to 25. The K-Series, LH-Series and DLH-Series standard joist designations listed in the following Standard Load Tables shall support the uniformly distributed loads as provided in the applicable tables:

Standard LRFD Load Table Open Web Steel Joists, K-Series – U.S. Customary Units
Standard ASD Load Table Open Web Steel Joists, K-Series – U.S. Customary Units
Standard LRFD Load Table Longspan Steel Joists, LH-Series – U.S. Customary Units
Standard ASD Load Table Longspan Steel Joists, LH-Series – U.S. Customary Units
Standard LRFD Load Table Deep Longspan Steel Joists, DLH-Series – U.S. Customary Units
Standard ASD Load Table Deep Longspan Steel Joists, DLH-Series – U.S. Customary Units
Standard LRFD Load Table Open Web Steel Joists, K-Series – S.I. Units
Standard ASD Load Table Open Web Steel Joists, K-Series – S.I. Units
Standard LRFD Load Table Longspan Steel Joists, LH-Series – S.I. Units
Standard ASD Load Table Longspan Steel Joists, LH-Series – S.I. Units
Standard LRFD Load Table Deep Longspan Steel Joists, DLH-Series – S.I. Units
Standard ASD Load Table Deep Longspan Steel Joists, DLH-Series – S.I. Units

Wherever a standard SJI Section Number is specified in the joist designation (e.g. 18K4, 32LH10) and other design load cases are also specified for the joist, the steel joist shall be designed for the corresponding total load as shown in the Standard Load Tables as a minimum.

User Note: Six standard types of K-Series, LH-Series and DLH-Series joists are designed and manufactured. These types are underslung (top chord bearing) or square-ended (bottom chord bearing), with parallel chords or with single or double pitched top chords. The Standard Load Tables apply for a pitched top chord up to 1/2 inch per foot (1:24).

The steel joist or Joist Girder designation depth shall be the depth at mid-span.

An alternate method of specifying a standard K-Series, LH-Series, or DLH-Series joist shall be permitted by providing the designation in a “load/load” sequence. The format used shall be ddKtl/ll, ddLHtl/ll, or ddDLHtl/ll where:

dd is the nominal depth of the joist in inches (mm)
tl is the total uniformly distributed load applied to the joist top chord, plf (kN/m)
ll is the uniform live load for which the deflection shall be checked and limited as required by this Specification, plf (kN/m)

User Note: The load/load K-Series, LH-Series, or DLH-Series joists can be specified in depths from 10 inches (254 mm) through 120 inches (3048 mm) and spans up through 240 feet (73152 mm). The maximum uniformly distributed load-carrying capacity of 2400 plf (35.03 kN/m) in ASD and 3600 plf (52.54 kN/m) in LRFD has been established for this alternate K-Series, LH-Series, or DLH-Series format. The maximum capacity for any given load/load joist designation is a function of span, depth and chord member size. When requirements exceed the standard K-Series load table limitations for loading, span, and depth, an LH-Series designation is recommended to facilitate the proper determination of minimum seat depth, end anchorage, bridging size, deck attachment, etc. Thus, any joist exceeding a 30 inch depth, a span of 60 feet, an in-kip moment of Depth x 61 kips in ASD or Depth x 91.5 kips in LRFD, or an end reaction of 9.2 kips in ASD or 13.8 kips in LRFD should be designated as an LH-Series which allows for a cross-reference with a standard LH designation as listed in this Specification for seat, end anchorage, bridging, attachment tables, etc.

A KCS Joist is a particular type of K-Series joist, and shall be designed in accordance with this Specification based on an envelope of moment and shear capacity, rather than uniform load capacity, to support uniform plus concentrated loads or other non-uniform loads. The KCS Joists shall be selected from standardized depths from 10 inches (254 mm) through 30 inches (762 mm), for spans up through 60 feet (18288 mm). The maximum total safe uniformly distributed load-carrying capacity of a KCS Joist, K-Series, shall be 550 plf (8.02 kN/m) in ASD or 825 plf (12.03 kN/m) in LRFD. A KCS Joist shall be parallel chord only and shall be permitted to be underslung or bottom chord bearing.

The KCS Joists, K-Series, standard designations shall be established by their nominal depth, followed by the letters “KCS”, and then by the Section Number designation assigned. The Section Number designations shall range from 1 to 5. A KCS Joist shall not be designated using the alternate “load/load” method. The KCS Joists, K-Series, standard designations listed in the following Standard Load Tables shall provide the moment capacity and shear capacity as listed in the applicable tables:

Standard LRFD Load Table for KCS Open Web Steel Joists – U.S. Customary Units
Standard ASD Load Table for KCS Open Web Steel Joists – U.S. Customary Units
Standard LRFD Load Table for KCS Open Web Steel Joists – S.I. Units
Standard ASD Load Table for KCS Open Web Steel Joists – S.I. Units

Where an open web configuration becomes impractical, a Joist Substitute, K-Series, shall be designed in accordance with this Specification to support uniform loads when the span is less than 10 feet (3048 mm). The maximum total safe uniformly distributed load-carrying capacity of a Joist Substitute shall be 550 plf (8.02 kN/m) in ASD or 825 plf (12.03 kN/m) in LRFD.

The Joist Substitutes, K-Series, standard designations shall be established by their nominal depth, e.g. 2.5, followed by the letter “K” and then by the chord size designation assigned. The chord size designations shall range from 1 to 3. The Joist Substitutes, K-Series, standard designations listed in the following Load Tables shall support the uniformly distributed loads as provided in the applicable tables:

User Note: The Joist Substitutes, K-Series, are standardized as 2.5 inch (64 mm) deep sections for spans up through 10’-0” (3048 mm).

LRFD Simple Span Load Table for 2.5 Inch K–Series Joist Substitutes – U.S. Customary Units
ASD Simple Span Load Table for 2.5 Inch K–Series Joist Substitutes – U.S. Customary Units
LRFD Simple Span Load Table for 64 mm K–Series Joist Substitutes – S.I. Units
ASD Simple Span Load Table for 64 mm K–Series Joist Substitutes – S.I. Units

LRFD Outriggers Load Table for 2.5 Inch K–Series Joist Substitutes – U.S. Customary Units
ASD Outriggers Load Table for 2.5 Inch K–Series Joist Substitutes – U.S. Customary Units
LRFD Outriggers Load Table for 64 mm K–Series Joist Substitutes – S.I. Units
ASD Outriggers Load Table for 64 mm K–Series Joist Substitutes – S.I. Units

A Top Chord Extension or Extended End, K-series, shall be a joist accessory that shall be designed in accordance with this Specification to support uniform loads when one or both ends of an underslung joist needs to be cantilevered beyond its bearing seat.

User Note: The Top Chord Extensions and Extended Ends are standardized as an “S” Type (top chord angles extended only) and an “R” Type (top chord and bearing seat angles extended), respectively.

Standard designations for the "S" Type shall range from S1 to S12 for spans from 0'-6" to 4'-6" (152 to 1372 mm). Standard designations for the "R" Type shall range from R1 to R12 for spans from 0'-6" to 6'-0" (152 to 1829 mm). The maximum total safe uniformly distributed load-carrying capacity of either an "R" or "S" Type extension shall be 550 plf (8.02 kN/m) in ASD or 825 plf (12.03 kN/m) in LRFD. The "S" Type Top Chord Extensions and "R" Type Extended Ends listed in the following Standard Load Tables shall support the uniformly distributed loads as provided in the applicable tables:

LRFD Top Chord Extension Load Table (S Type) – U.S. Customary Units
ASD Top Chord Extension Load Table (S Type) – U.S. Customary Units
LRFD Top Chord Extension Load Table (R Type) – U.S. Customary Units
ASD Top Chord Extension Load Table (R Type) – U.S. Customary Units
LRFD Top Chord Extension Load Table (S Type) – S.I. Units
ASD Top Chord Extension Load Table (S Type) – S.I. Units
LRFD Top Chord Extension Load Table (R Type) – S.I. Units
ASD Top Chord Extension Load Table (R Type) – S.I. Units

1.5 STRUCTURAL DESIGN DRAWINGS AND SPECIFICATIONS

The structural design drawings and specifications shall meet the requirements in the *Code of Standard Practice for Steel Joists and Joist Girders*, except for deviations specifically identified in the design drawings and/or specifications.

SECTION 2.
REFERENCED SPECIFICATIONS, CODES AND STANDARDS

2.1 REFERENCES

The standards listed below shall be considered as part of the requirements of this Specification. Where conflicts occur between this Specification and a referenced standard, the provisions of this Specification shall take precedence unless otherwise stated. This section lists the standards that are referenced in this Specification. The standards are listed in alphabetical order by name of standards developer organization, with the specific standard designations, title and dates of each of the referenced standards below.

American Institute of Steel Construction, Inc. (AISC), Chicago, IL

ANSI/AISC 360-10 *Specification for Structural Steel Buildings*

American Iron and Steel Institute (AISI), Washington, DC

ANSI/AISI S100-2012 *North American Specification for the Design of Cold-Formed Steel Structural Members*

American Society of Civil Engineers (ASCE), Reston, VA

SEI/ASCE 7-10 *Minimum Design Loads for Buildings and Other Structures*

American Society of Testing and Materials, ASTM International (ASTM), West Conshohocken, PA

ASTM A6/A6M-13A, *Standard Specification for General Requirements for Rolled Structural Steel Bars, Plates, Shapes, and Sheet Piling*

ASTM A36/A36M-12, *Standard Specification for Carbon Structural Steel*

ASTM A242/242M-13, *Standard Specification for High-Strength Low-Alloy Structural Steel*

ASTM A307-12a, *Standard Specification for Carbon Steel Bolts and Studs, 60 000 PSI Tensile Strength*

ASTM A325/325M-13, *Standard Specification for Structural Bolts, Steel, Heat Treated, 120/105 ksi [830 MPa] Minimum Tensile Strength*

ASTM A370-12a, *Standard Test Methods and Definitions for Mechanical Testing of Steel Products*

ASTM A500/A500M-13, *Standard Specification for Cold-Formed Welded and Seamless Carbon Steel Structural Tubing in Rounds and Shapes*

ASTM A501-07 *Standard Specification for Hot-Formed Welded and Seamless Carbon Steel Structural Tubing* ASTM

A529/A529M-05(2009), *Standard Specification for High-Strength Carbon-Manganese Steel of Structural Quality* ASTM

A572/A572M-13a, *Standard Specification for High-Strength Low-Alloy Columbium-Vanadium Structural Steel*

ASTM A588/A588M-10, *Standard Specification for High-Strength Low-Alloy Structural Steel, up to 50 ksi [345 MPa] Minimum Yield Point, with Atmospheric Corrosion Resistance*

ASTM A606/A606M-09a, *Standard Specification for Steel, Sheet and Strip, High-Strength, Low-Alloy, Hot-Rolled and Cold-Rolled, with Improved Atmospheric Corrosion Resistance*

ASTM A992/A992M-11, *Standard Specification for Structural Steel Shapes*

ASTM A1008/A1008M-13, *Standard Specification for Steel, Sheet, Cold-Rolled, Carbon, Structural, High-Strength Low-Alloy and High-Strength Low-Alloy with Improved Formability, Solution Hardened, and Bake Hardenable*

ASTM A1011/A1011M-13, *Standard Specification for Steel, Sheet and Strip, Hot-Rolled, Carbon, Structural, High-Strength Low-Alloy, High-Strength Low-Alloy with Improved Formability, and Ultra-High Strength*

ASTM A1065/A1065M-09(2014) *Standard Specification for Cold-Formed Electric-Fusion (ARC) Welded High-Strength Low-Alloy Structural Tubing in Shapes with 50 ksi (345 MPA) Minimum Yield Point*

ASTM A1085-13 *Standard Specification for Cold-Formed Welded Carbon Steel Hollow Structural Sections (HSS)*

American Welding Society (AWS), Miami, FL

AWS A5.1/A5.1M-2012, *Specification for Carbon Steel Electrodes for Shielded Metal Arc Welding*

AWS A5.5/A5.5M:2006, *Specification for Low-Alloy Steel Electrodes for Shielded Metal Arc Welding*

AWS A5.17/A5.17M-97:R2007, *Specification for Carbon Steel Electrodes and Fluxes for Submerged Arc Welding*

AWS A5.18/A5.18M:2005, *Specification for Carbon Steel Electrodes and Rods for Gas Shielded Arc Welding*

AWS A5.20/A5.20M:2005, *Specification for Carbon Steel Electrodes for Flux Cored Arc Welding*

AWS A5.23/A5.23M:2011, *Specification for Low-Alloy Steel Electrodes and Fluxes for Submerged Arc Welding*

AWS A5.28/A5.28M:2005, *Specification for Low-Alloy Steel Electrodes and Rods for Gas Shielded Arc Welding*

AWS A5.29/A5.29M:2010, *Specification for Low-Alloy Steel Electrodes for Flux Cored Arc Welding*

AWS D1.1/D1.1M:2015, *Structural Welding Code - Steel*

AWS D1.3/D1.3M:2008, *Structural Welding Code Sheet Steel*

User Note: The following informative references provide practical guidance in the use and application of this Specification:

Code of Federal Regulations (CFR), Occupational Safety and Health Administration (OSHA), 29 CFR Part 1926, Safety Standards for Steel Erection; Subpart R - Steel Erection; January 18, 2001, Washington, D.C.

Steel Joist Institute (SJI), Florence, SC

SJI-COSP-2015, *Code of Standard Practice for Steel Joists and Joist Girders*

Technical Digest No. 3 (2007), *Structural Design of Steel Joist Roofs to Resist Ponding Loads*

Technical Digest No. 5 (2015), *Vibration of Steel Joist-Concrete Slab Floors*

Technical Digest No. 6 (2012), *Structural Design of Steel Joist Roofs to Resist Uplift Loads*

Technical Digest No. 8 (2008), *Welding of Open Web Steel Joists and Joist Girders*

Technical Digest No. 9 (2008), *Handling and Erection of Steel Joists and Joist Girders*

Technical Digest No. 10 (2003), *Design of Fire Resistive Assemblies with Steel Joists*

Technical Digest No. 11 (2007), *Design of Lateral Load Resisting Frames Using Steel Joists and Joist Girders*

Technical Digest No. 12 (2007), *Evaluation and Modification of Open-Web Steel Joists and Joist Girders*

The Society for Protective Coatings (SSPC), *Steel Structures Painting Manual, Volume 2, Systems and Specifications*, Paint Specification No. 15, Steel Joist Shop Primer, May 1, 1999, Pittsburgh, PA.

Van Malssen, S.H. (1984), *The Effects of Arc Strikes on Steel Used in Nuclear Construction,* Welding Journal, American Welding Society, Miami, FL, July 1984.

SECTION 3.
MATERIALS

3.1 STEEL

The steel used in the manufacture of Joist Girders and K-Series, LH-Series, and DLH-Series joists shall conform to one of the following ASTM specifications:

ASTM A36/A36M, Carbon Structural Steel

ASTM A242/A242M, High-Strength Low-Alloy Structural Steel

ASTM A500/A500M, Cold-Formed Welded and Seamless Carbon Steel Structural Tubing in Rounds and Shapes

ASTM A529/A529M, High-Strength Carbon-Manganese Steel of Structural Quality

ASTM A572/A572M, High-Strength Low-Alloy Columbium-Vanadium Structural Steel

ASTM A588/A588M, High-Strength Low-Alloy Structural Steel up to 50 ksi [345 MPa] Minimum Yield Point with Atmospheric Corrosion Resistance

ASTM A606/A606M, Steel, Sheet and Strip, High-Strength, Low-Alloy, Hot-Rolled and Cold-Rolled, with Improved Atmospheric Corrosion Resistance

ASTM A992/A992M, Structural Steel Shapes

ASTM A1008/A1008M, Steel, Sheet, Cold-Rolled, Carbon, Structural, High-Strength Low-Alloy, High-Strength Low-Alloy with Improved Formability, Solution Hardened, and Bake Hardenable

ASTM A1011/A1011M, Steel, Sheet and Strip, Hot-Rolled, Carbon, Structural, High-Strength Low-Alloy, High-Strength Low-Alloy with Improved Formability, and Ultra-High Strength

ASTM A1018/A1018M, Steel, Sheet and Strip, Heavy Thickness Coils, Hot Rolled, Carbon, Structural, High-Strength Low-Alloy, Columbium or Vanadium, and High-Strength Low-Alloy with Improved Formability and Ultra-High Strength

EXCEPTION: Steel used in the manufacture of Joist Girders and K-Series, LH-Series, and DLH-Series joists shall be permitted to be of suitable quality ordered or produced to other than the listed ASTM specifications, provided that such material in the state used for final assembly and manufacture is weldable and is proven by tests performed by the producer or manufacturer to have properties, in accordance with Section 3.2.

3.2 MECHANICAL PROPERTIES

3.2.1 Minimum Yield Strength: Steel used for Joist Girders and K-Series, LH-Series, and DLH-Series joists shall have a minimum yield strength determined in accordance with one of the procedures specified in this section, which is equal to the yield strength assumed in the design.

User note: The term "Yield Strength" as used herein designates the yield level of a material as determined by the applicable method outlined in paragraph 13.1 “Yield Point”, and in paragraph 13.2 “Yield Strength”, of ASTM A370, *Standard Test Methods and Definitions for Mechanical Testing of Steel Products*, or as specified in Section 3.2.3.

Evidence that the steel furnished meets or exceeds the design yield strength shall, if requested, be provided in the form of an affidavit or by witnessed or certified test reports.

For material used without consideration of increase in yield strength resulting from cold forming, the specimens shall be taken from as-rolled material. In the case of such material, the mechanical properties of which conform to the requirements of one of the listed ASTM specifications in Section 3.1, the test specimens and procedures shall conform to those of the applicable ASTM specification and to ASTM A370.

3.2.2 Other Materials: For materials where the mechanical properties do not conform to the requirements of one of the ASTM specifications listed in Section 3.1, these materials shall conform to the following requirements:

a) The specimens shall comply with ASTM A370,
b) The specimens shall exhibit a yield strength equal to or exceeding the design yield strength,
c) The specimens shall have an elongation of not less than 20 percent in 2 inches (51 mm) for sheet strip, or 18 percent in 8 inches (203 mm) for plates, shapes and bars with adjustments for thickness for plates, shapes and bars as prescribed in either ASTM A36/A36M, A242/A242M, A500/A500M, A529/A529M, A572/A572M, A588/A588M, or A992/A992M, whichever ASTM specification is applicable, on the basis of design yield strength.
d) The number of tests for a), b), and c) above shall be as prescribed in ASTM A6/A6M for plates, shapes, and bars; and ASTM A606/A606M, A1008/A1008M and A1011/A1011M for sheet and strip.

3.2.3 As-Formed Strength: If as-formed strength is utilized, the test reports shall show the results of tests performed on full section specimens in accordance with the provisions of the AISI S100. The reports shall also indicate compliance with the following additional requirements:

a) The yield strength calculated from the test data shall equal or exceed the design yield strength.
b) Where tension tests are made for acceptance and control purposes, the tensile strength shall be at least 8 percent greater than the yield strength of the section.
c) Where compression tests are used for acceptance and control purposes, the specimen shall withstand a gross shortening of 2 percent of its original length without cracking. The length of the specimen shall be not greater than 20 times the least radius of gyration.
d) If any test specimen fails to pass the requirements of the subparagraphs (a), (b), or (c) above, as applicable, two retests shall be made of specimens from the same lot. Failure of one of the retest specimens to meet such requirements shall be the cause for rejection of the lot represented by the specimens.

3.3 WELDING ELECTRODES

3.3.1 Welding Electrodes: The welding electrodes used for arc welding shall be in accordance with the following:

a) For connected members both having a specified minimum yield strength greater than 36 ksi (250 MPa), one of the following electrodes shall be used:

AWS A5.1: E70XX
AWS A5.5: E70XX-X
AWS A5.17: F7XX–EXXX, F7XX–ECXXX flux electrode combination
AWS A5.18: ER70S-X, E70C-XC, E70C-XM
AWS A5.20: E7XT-X, E7XT-XM
AWS A5.23: F7XX–EXXX-XX, F7XX–ECXXX-XX
AWS A5.28: ER70S-XXX, E70C-XXX
AWS A5.29: E7XTX-X, E7XTX-XM

b) For connected members both having a specified minimum yield strength of 36 ksi (250 MPa) or one having a specified minimum yield strength of 36 ksi (250 MPa), and the other having a specified minimum yield strength greater than 36 ksi (250 MPa), one of the following electrodes shall be used:

AWS A5.1: E60XX
AWS A5.17: F6XX-EXXX, F6XX-ECXXX flux electrode combination
AWS A5.20: E6XT-X, E6XT-XM
AWS A5.29: E6XTX-X, E6XTX-XM
or any of those listed in Section 3.3.1(a).

3.3.2 Other Welding Methods: Other welding methods, providing equivalent strength as demonstrated by tests, shall be permitted to be used.

3.4 PAINT

The standard shop paint shall be considered an impermanent and provisional coating.

User Note: The standard shop paint is intended to protect the steel for only a short period of exposure in ordinary atmospheric conditions.

When specified, the standard shop paint shall conform to one of the following:

a) The Society for Protective Coatings, SSPC Paint Specification No. 15.

b) Or, shall be a shop paint which meets the minimum performance requirements of SSPC Paint Specification No. 15.

SECTION 4.
DESIGN AND MANUFACTURE

4.1 METHOD

Joist Girders support steel joists or other secondary members and shall be designed in accordance with this Specification as simply-supported primary load-carrying members for in-plane loading. Steel joists shall be designed in accordance with this Specification as simply-supported trusses supporting a floor or roof deck so constructed as to brace the top chord of the steel joists against lateral buckling. Where any applicable design feature is not specifically covered herein, the design shall be in accordance with the following Specifications:

a) Where the steel used consists of hot-rolled shapes, bars or plates, AISC 360.

b) For members which are cold-formed from sheet or strip steel, AISI S100.

4.1.1 Design Basis:

Steel joist and Joist Girder designs shall be in accordance with the provisions in this Specification using Load and Resistance Factor Design (LRFD) or Allowable Strength Design (ASD) as specified by the specifying professional for the project.

4.1.2 Loads, Forces and Load Combinations:

The loads and forces used for the steel joist and Joist Girder design shall be calculated by the specifying professional in accordance with the applicable building code and specified and provided on the structural drawings.

For nominal concentrated loads, which have been accounted for in the specified uniform loads, the addition of chord bending moments or an added shop or field web member due to these nominal concentrated loads shall not be required provided that the sum of the concentrated loads within a chord panel does not exceed 100 pounds and the attachments are concentric to the chord. When exact dimensional locations for concentrated loads which do not meet the above criteria are provided by the specifying professional, the joist shall be designed for the loads and load locations provided without the need for additional field applied web members at the specified locations.

The load combinations shall be specified by the specifying professional on the structural drawings in accordance with the applicable building code. In the absence of an applicable building code, the load combinations shall be those stipulated in SEI/ASCE 7 Section 2.3 and Section 2.4 as appropriate. For LRFD designs, the load combinations in SEI/ASCE 7, Section 2.3 shall apply. For ASD designs, the load combinations in SEI/ASCE 7, Section 2.4 shall apply.

4.2 DESIGN AND ALLOWABLE STRESSES

4.2.1 Design Using Load and Resistance Factor Design (LRFD)

Joists and Joist Girders shall have their components so proportioned that the required stresses, f_u, shall not exceed ϕF_n where

f_u	= required stress	ksi (MPa)
F_n	= nominal stress	ksi (MPa)
ϕ	= resistance factor	
ϕF_n	= design stress	ksi (MPa)

4.2.2 Design Using Allowable Strength Design (ASD)

Joists and Joist Girders shall have their components so proportioned that the required stresses, f, shall not exceed F_n / Ω where

f	= required stress	ksi (MPa)
F_n	= nominal stress	ksi (MPa)
Ω	= safety factor	
F_n/Ω	= allowable stress	ksi (MPa)

4.2.3 Stresses:

The calculation of design stress or allowable stress for chords shall be based on a yield strength, F_y, of the material used in manufacturing equal to 50 ksi (345 MPa). The calculation of design stress or allowable stress for all other joist elements shall be based on a yield strength, F_y, of the material used in manufacturing, but shall not be less than 36 ksi (250 MPa) nor greater than 50 ksi (345 MPa).Yield strengths greater than 50 ksi shall not be used for the design of any members.

4.2.3.1 Tension: ϕ_t = 0.90 (LRFD), Ω_t = 1.67 (ASD)

Design Stress = $0.9F_y$ (LRFD) (4.2-1)

Allowable Stress = $0.6F_y$ (ASD) (4.2-2)

4.2.3.2 Compression: ϕ_c = 0.90 (LRFD), Ω_c = 1.67 (ASD)

Design Stress = $0.9F_{cr}$ (LRFD) (4.2-3)

Allowable Stress = $0.6F_{cr}$ (ASD) (4.2-4)

Where:

For members with $k\ell/r \leq 4.71\sqrt{E/QF_y}$

$$F_{cr} = Q\left[0.658^{\left(QF_y/F_e\right)}\right]F_y \quad (4.2\text{-}5)$$

For members with $k\ell/r > 4.71\sqrt{E/QF_y}$

$$F_{cr} = 0.877F_e \quad (4.2\text{-}6)$$

Where F_e = Elastic buckling stress determined in accordance with Equation 4.2-7

$$F_e = \frac{\pi^2 E}{\left(k\ell/r\right)^2} \quad (4.2\text{-}7)$$

In the above equations, ℓ is the length, k is the effective length factor, and r is the corresponding radius of gyration of the member as defined in Section 4.3. E is equal to 29,000 ksi (200,000 MPa).

For hot-rolled sections and cold-formed angles, Q shall be taken as the full reduction factor for slender compression members as determined in accordance with AISC 360-10.

Exception: Where a compression web member is a crimped-end angle member intersecting at the first bottom chord panel point, whether hot-rolled or cold-formed, then Q shall be determined as follows:

$$Q = [5.25/(w/t)] + t \leq 1.0 \quad (4.2\text{-}8a)$$

Where: w = angle leg length, inches
t = angle leg thickness, inches

or,

$$Q = [5.25/(w/t)] + (t/25.4) \leq 1.0 \quad (4.2\text{-}8b)$$

Where: w = angle leg length, millimeters
t = angle leg thickness, millimeters

For all other cold-formed sections the method of calculating the nominal compression strength shall be in accordance with AISI S100.

4.2.3.3 Bending: ϕ_b = 0.90 (LRFD), Ω_b = 1.67 (ASD)

Bending calculations shall be based on the elastic section modulus.

For chords and web members other than solid rounds: $F_n = F_y$

Design Stress = $\phi_b F_n = 0.9F_y$ (LRFD) (4.2-9)

Allowable Stress = $F_n/\Omega_b = 0.6F_y$ (ASD) (4.2-10)

For web members of solid round cross section: $F_n = 1.6\ F_y$

Design Stress = $\phi_b F_n = 1.45F_y$ (LRFD) (4.2-11)

Allowable Stress = $F_n/\Omega_b = 0.95F_y$ (ASD) (4.2-12)

For bearing plates used in joist seats: $F_n = 1.5\ F_y$

Design Stress = $\phi_b F_n = 1.35F_y$ (LRFD) (4.2-13)

Allowable Stress = $F_n/\Omega_b = 0.90F_y$ (ASD) (4.2-14)

4.2.3.4 Weld Strength:

Shear at throat of fillet welds, flare bevel groove welds, partial joint penetration groove welds, and plug/slot welds shall be determined as follows:

Nominal Shear Stress = $F_{nw} = 0.6F_{exx}$ (4.2-15)

LRFD: $\phi_w = 0.75$

Design Shear Strength = $\phi R_n = \phi_w F_{nw} A = 0.45F_{exx} A_w$ (4.2-16)

ASD: $\Omega_w = 2.0$

Allowable Shear Strength = $R_n/\Omega_w = F_{nw}A/\Omega_w = 0.3F_{exx} A_w$ (4.2-17)

Where:

F_{exx} is determined as follows:

E70 series electrodes or F7XX-EXXX flux-electrode combinations F_{exx} = 70 ksi (483 MPa)

E60 series electrodes or F6XX-EXXX flux-electrode combinations F_{exx} = 60 ksi (414 MPa)

A_w = effective throat area, where:

For fillet welds, A_w = effective throat area

Other design methods demonstrated to provide sufficient strength by testing shall be permitted to be used.

For flare bevel groove welds, the effective weld area is based on a weld throat width, T, where:

T (inches) = 0.12D + 0.11 (4.2-18a)

Where D = web diameter, inches

or,

T (mm) = 0.12D + 2.8 (4.2-18b)

Where D = web diameter, mm

For plug/slot welds, A_w = cross-sectional area of the hole or slot in the plane of the faying surface provided that the hole or slot meets the requirements of AISC 360.

User Note: For more on plugs/slot welds see Steel Joist Institute Technical Digest No. 8, “Welding of Open-Web Steel Joists and Joist Girders”.

Strength of resistance welds and complete-joint-penetration groove or butt welds in tension or compression (only where the stress is normal to the weld axis) shall be equal to the base metal strength:

$\phi_t = \phi_c = 0.90$ (LRFD) $\Omega_t = \Omega_c = 1.67$ (ASD)

Design Stress = $0.9\ F_y$ (LRFD) (4.2-19)

Allowable Stress = $0.6\ F_y$ (ASD) (4.2-20)

4.3 MAXIMUM SLENDERNESS RATIOS

The slenderness ratios, $1.0\ell/r$ and $1.0\ell_s/r$ of members as a whole or any component part shall not exceed the values given in Table 4.3-1, Part A.

4.3.1 Effective Slenderness Ratios: The effective slenderness ratio, $k\ell/r$ to be used in calculating the nominal stresses, F_{cr} and F'_e, is the largest value as determined from Table 4.3-1, Part B and Part C, and modified where required with equation 4.3-1. The effective length k shall be taken as 1.0 for all components in Joist Girders.

4.3.2 Compressive Members: In compression members where fillers or ties are used, they shall be spaced so that the ℓ_s/r_z ratio of each component does not exceed the governing ℓ/r ratio of the member as a whole. The terms used in Table 4.3-1 shall be defined as follows:

ℓ = length center-to-center of panel points, except ℓ = 36 inches (914 millimeters) for calculating ℓ/r_y of the top chord member for joists, and for Joist Girders this distance shall be the unbraced length between joists which are positively attached to the top chord, in. (mm).

ℓ_s = maximum length center-to-center between panel point and filler (tie), or between adjacent fillers (ties), in. (mm).

r_x = member radius of gyration about the horizontal axis of the joist or Joist Girder cross section, in. (mm).

r_y = member radius of gyration about the vertical axis of the joist or Joist Girder cross section, in. (mm).

r_z = least radius of gyration of a member component, in. (mm).

Compression web members shall be those web members subject to compressive axial loads under gravity loading.

4.3.3 Tension Members: Tension web members shall be those web members subject to tension axial loads under gravity loading, and which shall be permitted to be subject to compressive axial loads under alternate loading conditions

User Note: An example of a non-gravity alternate loading condition is net uplift.

4.3.4 Top Chords: For top chords, the end panel(s) shall be the panels between the bearing seat and the first primary interior panel point comprised of at least two intersecting web members.

4.3.5 Built-Up Web Members: For built-up web members composed of two interconnected shapes, where $\ell_s/r_z > 40$,

a modified slenderness ratio $\left(\frac{k\ell}{r_y}\right)_m$ shall replace $\frac{k\ell}{r_y}$ in equations 4.2-5, 4.2-6, and 4.2-7, where:

$$\left(\frac{k\ell}{r_y}\right)_m = \sqrt{\left(\frac{k\ell}{r_y}\right)^2 + \left(\frac{k_i \ell_s}{r_z}\right)^2} \tag{4.3-1}$$

and,

k_i = 0.50 for angles back-to-back
= 0.75 for channels back-to-back

TABLE 4.3-1

MAXIMUM AND EFFECTIVE SLENDERNESS RATIOS[1]

Description	$k\ell/r_x$	$k\ell/r_y$	$k\ell/r_z$	$k\ell_s/r_z$
I. TOP CHORD INTERIOR PANELS				
A. The slenderness ratios, $1.0\ell/r$ and $1.0\ell_s/r$, of members as a whole or any component part shall not exceed 90.				
B. The effective slenderness ratio for joists, $k\ell/r$, to determine F_{cr} where k is:				
1. Two shapes with fillers or ties	0.75	0.94	---	1.0
2. Two shapes without fillers or ties	---	---	0.75	---
3. Single component members	0.75	0.94	---	---
C. For bending, the effective slenderness ratio, $k\ell/r$, to determine F'_e where k is:	0.75	---	---	---
II. TOP CHORD END PANELS				
A. The slenderness ratios, $1.0\ell/r$ and $1.0\ell_s/r$, of members as a whole or any component part shall not exceed 120.				
B. The effective slenderness ratio for joists, $k\ell/r$, to determine F_{cr} where k is:				
1. Two shapes with fillers or ties	1.0	0.94	---	1.0
2. Two shapes without fillers or ties	---	---	1.0	---
3. Single component members	1.0	0.94	---	---
C. For bending, the effective slenderness ratio, $k\ell/r$, to determine F'_e where k is:	1.0	---	---	---
III. ALL BOTTOM CHORD PANELS				
A. The slenderness ratios, $1.0\ell/r$ and $1.0\ell_s/r$, of members as a whole or any component part shall not exceed 240.				
B. For members subject to compression, the effective slenderness ratio for joists, $k\ell/r$, to determine F_{cr} where k is:				
1. Two shapes with fillers or ties	0.9	0.94	---	1.0
2. Two shapes without fillers or ties	---	---	0.9	---
3. Single component members	0.9	0.94	---	---
C. For bending, the effective slenderness ratio, $k\ell/r$, to determine F'_e where k is:	0.9	---	---	---
IV. WEB MEMBERS				
A. The slenderness ratios, $1.0\ell/r$ and $1.0\ell_s/r$, of members as a whole or any component part shall not exceed 240 for a tension member or 200 for a compression member.				
B. For members subject to compression, the effective slenderness ratio for joists, $k\ell/r$, to determine F_{cr} where k is:				
1. Two shapes with fillers or ties	0.75	1.0	---	1.0
2. Two shapes without fillers or ties	---	---	1.0	---
3. Single component members	0.75	0.9*	---	---
*For end tension web members subject to compression, k shall equal 0.8				

(1) The effective length k shall equal 1.0 for all components of Joist Girders.

4.4 MEMBERS

4.4.1 Chords

The joist and Joist Girder bottom chord shall be designed as an axially loaded tension member.

For Joist Girders, the radius of gyration of the bottom chord about its vertical axis shall not be less than $\ell/240$ where ℓ is the distance between lines of bracing. The radius of gyration of a Joist Girder top chord about the vertical axis shall not be less than Span/575.

For steel joists, the radius of gyration of the top chord about its vertical axis shall not be less than the results of equation 4.4-1 or 4.4-2:

$$r_y \geq \ell_{br} \Big/ \left(124+0.67\,d_j+28\frac{d_j}{L}\right), \text{ in.} \qquad (4.4\text{-}1a)$$

$$r_y \geq \ell_{br} \Big/ \left(124+0.026\,d_j+0.34\frac{d_j}{L}\right), \text{ mm} \qquad (4.4\text{-}1b)$$

or,

$$r_y \geq \ell_{br}/170 \qquad (4.4\text{-}2)$$

Where:

d_j is the steel joist depth, in. (mm)

L is the joist span length, ft. (m)

r_y is the radius of gyration of the top chord about the vertical axis of the joist cross section, in. (mm)

ℓ_{br} is the spacing in inches (millimeters) between lines of bridging as specified in Section 5.5.3.1.

A steel joist top chord shall be considered as laterally braced by the floor slab or roof deck provided the requirements of Section 5.9 are met.

A Joist Girder top chord shall be considered as laterally braced by the steel joists provided positive attachment is made. The outstanding part of the top chord member shall be designed such that the allowable reaction from a single joist shall not exceed equation 4.4-3 or 4.4-4:

$$\phi P_p \text{ and } \phi P_p\,(1.6 - f_{au}/\phi Q F_y) \qquad \text{(LRFD, } \phi = 0.9) \qquad (4.4\text{-}3)$$

$$P_p/\Omega \text{ and } P_p/\Omega\,(1.6 - \Omega f_a/Q F_y) \qquad \text{(ASD, } \Omega = 1.67) \qquad (4.4\text{-}4)$$

Where:

F_y = Specified minimum yield strength, ksi (MPa)

P_p = Plastic failure mode = $[(t^2F_y)/[2(b-k)]][g+5.66(b-k)]$, kips (N)

Q = Form factor defined in Section 4.2.3.2

b = width of the outstanding part of the top chord member, in. (mm)

f_{au} = P_u/A = Required compressive stress, ksi (MPa)

f_a = P/A = Required compressive stress, ksi (MPa)

g = width of bearing seat, in. (mm)

k = value from angle properties or similar dimension for other members, in (mm)

t = thickness of the outstanding part of the top chord member, in. (mm)

The top chord of a steel joist or Joist Girder shall be designed as a continuous member subject to combined axial and bending stresses, except a Joist Girder loaded only at panel points shall be designed as an axial loaded compression member. For combined stresses the top chord shall be so proportioned that:

For **LRFD**:

at the panel point:

$$f_{au} + f_{bu} \leq 0.9F_y \tag{4.4-5}$$

at the mid panel:

for, $\dfrac{f_{au}}{\phi_c F_{cr}} \geq 0.2$,

$$\frac{f_{au}}{\phi_c F_{cr}} + \frac{8}{9}\left[\frac{C_m f_{bu}}{\left[1-\left(\dfrac{f_{au}}{\phi_c F_e'}\right)\right] Q\phi_b F_y}\right] \leq 1.0 \tag{4.4-6}$$

for, $\dfrac{f_{au}}{\phi_c F_{cr}} < 0.2$,

$$\frac{f_{au}}{2\phi_c F_{cr}} + \left[\frac{C_m f_{bu}}{\left[1-\left(\dfrac{f_{au}}{\phi_c F_e'}\right)\right] Q\phi_b F_y}\right] \leq 1.0 \tag{4.4-7}$$

f_{au} = P_u/A = Required compressive stress using LRFD load combinations, ksi (MPa)

P_u = Required axial strength using LRFD load combinations, kips (N)

A = Area of the top chord, in.^{2} (mm^2)

f_{bu} = M_u/S = Required bending stress at the location under consideration using LRFD load combinations, ksi (MPa)

M_u = Required flexural strength using LRFD load combinations, kip-in. (N-mm)

S = Elastic Section Modulus, in.^{3} (mm^3)

F_{cr} = Nominal axial compressive stress in ksi (MPa) based on $k\ell/r$ as defined in Section 4.3

C_m = $1 - 0.3\, f_{au}/\phi_c F'_e$ for end panels

C_m = $1 - 0.4\, f_{au}/\phi_c F'_e$ for interior panels

Q = Form factor defined in Section 4.2.3.2

ϕ_c = Resistance factor for compression = 0.9

ϕ_b = Resistance factor for flexure = 0.9

F_y = Specified minimum yield strength, ksi (MPa)

F'_e = $\dfrac{\pi^2 E}{(k\ell/r_x)^2}$, ksi (MPa),

where ℓ is the length, *k* is the effective length factor, and r_x is the corresponding radius of gyration of the member as defined in Section 4.3

E = Modulus of elasticity, 29,000 ksi (200,000 MPa)

For **ASD**:

at the panel point:

$$f_a + f_b \leq 0.6F_y \tag{4.4-8}$$

at the mid panel:

for, $\frac{f_a}{F_a} \geq 0.2$,

$$\frac{f_a}{F_a} + \frac{8}{9}\left[\frac{C_m f_b}{\left[1-\left(\frac{1.67f_a}{F'_e}\right)\right]QF_b}\right] \leq 1.0 \tag{4.4-9}$$

for $\frac{f_a}{F_a} < 0.2$,

$$\left(\frac{f_a}{2F_a}\right) + \left[\frac{C_m f_b}{\left[1-\left(\frac{1.67f_a}{F'_e}\right)\right]QF_b}\right] \leq 1.0 \tag{4.4-10}$$

f_a = P/A required compressive stress using ASD load combinations, ksi (MPa)

A = Area of the top chord, in.^{2} (mm^2)

P = Required axial strength using ASD load combinations, kips (N)

f_b = M/S = required bending stress at the location under consideration using ASD load combinations, ksi (MPa)

S = Elastic Section Modulus, in.^{3} (mm^3)

M = Required flexural strength using ASD load combinations, k-in. (N-mm)

F_a = Allowable axial compressive stress based on $k\ell/r$ as defined in Section 4.3; $0.6F_{cr}$, ksi (MPa)

F_b = Allowable bending stress; $0.6F_y$, ksi (MPa)

C_m = $1 - 0.50\ f_a/F'_e$ for end panels

C_m = $1 - 0.67\ f_a/F'_e$ for interior panels

Q = Form factor defined in Section 4.2.3.2

F'_e = $\frac{\pi^2 E}{(k\ell/r_x)^2}$, ksi (MPa),

where ℓ is the length, *k* is the effective length factor, and r_x is the corresponding radius of gyration of the member as defined in Section 4.3

E = Modulus of elasticity, 29,000 ksi (200,000 MPa)

The top chord and bottom chord shall be designed such that at each joint complies with equation 4.4-11 or 4.4-12:

$$f_{vmod} \leq \phi_v F_n \qquad \text{(LRFD, } \phi_v = 1.00\text{)} \qquad (4.4\text{-}11)$$

$$f_{vmod} \leq F_n/\Omega_v \qquad \text{(ASD, } \Omega_v = 1.50\text{)} \qquad (4.4\text{-}12)$$

F_n = nominal shear stress = $0.6F_y$, ksi (MPa)

f_t = axial stress = P/A, ksi (MPa)

f_v = shear stress = V/bt, ksi (MPa)

f_{vmod} = modified shear stress = $\left(\frac{1}{2}\right)\sqrt{f_t^2+4f_v^2}$

b = length of vertical part(s) of cross section, in. (mm)

t = thickness of vertical part(s) of cross section, in. (mm)

It shall not be necessary to design the top chord and bottom chord for the modified shear stress, f_{vmod}, where a round bar web member is continuous through a joint. The minimum required shear of section 4.4.2 (25 percent of the maximum end reaction) shall not be required when evaluating Equation 4.4-11 or 4.4-12.

KCS Joist, K-Series, chords shall be designed for a flat positive bending moment envelope where the moment capacity is constant at all interior panels. The top chord end panel(s) shall be designed for an axial load based on the force in the first tension web resulting from the specified shear. A uniform load of 550 plf (8.02 kN/m) in ASD or 825 plf (12.03 kN/m) in LRFD shall be used to check bending in the end panel(s). The top chord interior panels shall be designed for an axial stress resulting from the constant moment capacity plus the bending stress. The bending stress shall be determined from the smaller uniform load derived from the constant moment and constant shear, not to exceed 550 plf (ASD) or 825 plf (LRFD). The constant moment and shear shall be those values as listed in the Standard Load Table for KCS Steel Joists.

4.4.2 Web

The vertical shears to be used in the design of the web members shall be determined by including all loads, but such vertical shears shall be not less than 25 percent of the maximum end reaction from the design load combinations.

4.4.2.1 Redundant Web Members: Redundant web members used in modified Warren type web systems shall be designed to resist the gravity loads supported by the member plus an additional axial load of ½ of 1.0 percent of the top chord axial force. For a **Joist Girder**, this total axial load shall not be less than 2 percent of the top chord axial force.

4.4.2.2 Joist Girders: For Joist Girders, the tension web members shall be designed to resist at least 25 percent of their axial force in compression.

4.4.2.3 KCS Joist Web Forces: KCS Joist web forces shall be determined based on a flat shear envelope, and the following:

a) All webs shall be designed for a vertical shear equal to the specified shear capacity.
b) All webs shall be designed for 100 percent stress reversal except for the first tension web which remains in tension under all simple span gravity loads.

4.4.2.4 Single Component Web Member: In those cases where a single component web member is attached to the outside of the stem of a tee or double angle chord or any other orientation of a single web member which creates an out-of-plane moment, the web member design shall account for the stresses due to eccentricity.

4.4.2.4.1 Uncrimped Single Angle Web Members

For 1 inch uncrimped single angle web members where one leg is placed flat against one chord member in the gap, the resulting eccentricities and the effects in loading shall be considered in the design. A minimum of 50 percent of the required weld shall be deposited to each chord angle.

For angles subjected to tensile loading, the following requirements shall be met:

For **LRFD**: combined axial and bending stresses shall be proportioned in accordance with Eq. 4.4-5.

For **ASD**: combined axial and bending stresses shall be proportioned in accordance with Eq. 4.4-8.

For angles subjected to compression loading, the following requirements shall be met:

For **LRFD**:

at the panel point, combined axial and bending stresses shall be proportioned in accordance with Eq. 4.4-5.

at the mid length, the strength shall meet Eqs. 4.4-6 or 4.4-7, and 4.4-13:

$$\frac{f_{au}}{\phi_c F_{crz}} \leq 1.0 \tag{4.4-13}$$

where

f_{au} = P_u/A = Required tensile or compressive stress, ksi (MPa)

P_u = Required axial strength using LRFD load combinations, kips (N)

A = Area of the uncrimped angle web, in.^{2}, (mm^2)

f_{bu} = M_u/S = required bending stress, ksi (MPa)

M_u = Required flexural strength = $0.5 P_u \left(\frac{\text{chord gap}}{2} - \bar{y} \right)$, kip-in. (N-mm)

S = Minimum Elastic Section Modulus, in.^{3} (mm^3)

F_{cr} = F_{crx}, ksi (MPa)

F_{crx} = Nominal axial compressive stress in ksi (MPa) based on $k\ell/r_x$, where ℓ is the length, k is the effective length factor, and r_x is the corresponding radius of gyration of the member as defined in Section 4.3

F_{crz} = Nominal axial compressive stress in ksi (MPa) based on $k\ell/r_z$ where k = 1.0

C_m = 1.0

F_y = Specified minimum yield strength, ksi (MPa)

F'_e = $\frac{\pi^2 E}{\left(k\ell/r_x\right)^2}$, ksi (MPa)

Q = Form factor defined in Section 4.2.3.2

For **ASD**:

at the panel point, combined axial and bending stresses shall be proportioned in accordance with Eq. 4.4-8.

at the mid length the strength shall meet Eqs. 4.4-9 or 4.4-10, and 4.4-14:

$$\frac{f_a}{F_{az}} \leq 1.0 \qquad (4.4\text{-}14)$$

where

f_a = P/A = Required tensile or compressive stress, ksi (MPa)

P = Required axial strength using ASD load combinations, kips (N)

A = Area of the uncrimped angle web, in.^{2}, (mm^2)

f_b = M/S = required bending stress, ksi (MPa)

S = Minimum Elastic Section Modulus, in.^{3} (mm^3)

M = Required flexural strength = $0.5P\left(\frac{\text{chord gap}}{2} - \bar{y}\right)$, kip-in. (N-mm)

F_a = F_{ax}, ksi (MPa)

F_{ax} = Nominal axial compressive stress in ksi (MPa) based on $k\ell/r_x$, where ℓ is the length, k is the effective length factor, and r_x is the corresponding radius of gyration of the member as defined in Section 4.3

F_{az} = Nominal axial compressive stress in ksi (MPa) based on $K\ell/r_z$, where k = 1.0

F_b = Allowable bending stress; $0.6F_y$, ksi (MPa)

Alternate methods of design shall be permitted provided they provide strength equal to or greater than those given. Alternate design procedures shall be submitted to the Steel Joist Institute's consulting engineer for approval.

4.4.3 Fillers and Ties

Fillers or ties added on chord or web compression members shall be designed and connected for a force equal to 2 percent of the required member axial force.

4.4.4 Joist and Joist Girder Extensions

Joist and Joist Girder extensions shall be designated as one of three extension types, as follows: top chord extensions (TCX), extended ends, or full depth cantilevers.

Design criteria for joist extensions shall be specified using one of the following methods:

a) A joist top chord extension (TCX), extended end, or full depth cantilevered end shall be designed for the load from the Standard Load Tables based on the design length and designation of the specified joist. In the absence of other design information, the joist manufacturer shall design the joist extension for this loading as a default.

b) A loading diagram shall be provided for the joist extension, extended end, or full depth cantilevered end. The diagram shall include the magnitude and location of the loads to be supported, as well as the applicable load combinations.

c) 2½" deep steel joist extensions shall be permitted to be specified using extension designations found in the Top Chord Extension Load Table (S Type) for TCXs or the Top Chord Extension Load Table (R Type) for extended ends.

Any deflection requirements or limits due to the accompanying loads and load combinations on the steel joist or Joist Girder extension shall be provided by the specifying professional, regardless of the method used to specify the extension. Unless otherwise specified, the joist manufacturer shall check the extension for the specified deflection limit under uniform live load acting simultaneously on both the joist base span and the extension.

The joist manufacturer shall consider the effects of steel joist or Joist Girder extension loading on the base span of the steel joist or Joist Girder. This shall include carrying the design bending moment due to the loading on the extension into the top chord end panel(s), and the effect on the overall steel joist or Joist Girder chord and web axial forces. In the case of a K-Series Standard Type 'R' Extended End or 'S' TCX, the design bending moment shall be determined by the tabulated extension section modulus (S) multiplied by the appropriate allowable (ASD) or design (LRFD) flexural stress.

Bracing of extensions shall be clearly indicated on the structural drawings.

4.5 CONNECTIONS

4.5.1 Methods

Member connections and splices shall be made by attaching the members to one another by arc or resistance welding or other accredited methods in accordance with the following:

a) Steel joist and Joist Girder arc welded joints shall be in accordance with the American Welding Society, "Structural Welding Code-Steel", D1.1, and/or the "Structural Welding Code Sheet Steel", D1.3 with the following seven modified acceptance criteria as permitted by AWS D1.1 Clause 6.8:

1) Undercut shall not exceed 1/16 inch (2 mm) for welds oriented parallel to the principal stress.

User Note: The typical diagonal web member connection to one leg of a chord angle is considered to be parallel to the principal stress.

2) Discontinuities outside of the weld design length shall be permitted provided no cracks exist and undercut does not exceed the limits of item 1).

User Note: The weld design length is the minimum weld length needed for the connection force and weld thickness. Portions of the actual weld length with imperfections or discontinuities such as porosity or lack of a full profile are not included when comparing the actual weld length to the weld design length.

3) One unrepaired arc strike shall be permitted per joint provided it does not result in other unacceptable defects.

User Note: Minor arc strikes do not reduce the strength of AWS Group II materials (refer to Van Malssen, 1984).

4) The effective throat for flare bevel groove welds shall be calculated in accordance with equation 4.2-18.

User Note: The effective weld throat used by the SJI with round bars is based on SJI research and is more conservative than AWS D1.1 for GMAW for round bars in excess of 9/16" (14 mm). See Steel Joist Institute Technical Digest 8, "Welding of Open Web Steel Joists and Joist Girders".

5) Tack welds that are discontinuous from other welds shall meet the criteria for undercut, but shall be exempt from all other acceptance criteria.

User Note: Joist manufacturers use tack welds in the assembly process, and so long as they do not diminish the strength of the base metal and are not incorporated into the final weld for strength, they are not required to meet other inspection criteria.

6) The weld profile shall be considered acceptable provided neither the weld leg nor the weld throat is undersized less than AWS D1.1 limits within the weld design length.

7) For material with thickness less than 1/8", AWS D1.1 or D1.3 shall be considered appropriate.

User Note: AWS D1.1 does not address thicknesses less than 1/8" for hot rolled material and AWS D1.3 does not address hot rolled material, thus SJI has extended the ranges to include these material thicknesses.

b) Steel joist and Joist Girder resistance welded joints shall follow a preproduction validation procedure and a production checking procedure and shall meet the strength requirements of this Specification.

User Note: Spot, flash or upset resistance welds should have a written welding procedure qualification record and a systematic quality plan. For further information, see Steel Joist Institute Technical Digest 8, "Welding of Open Web Steel Joists and Joist Girders".

c) Welded Connections for Crimped-End Angle Web Members

1) The connection of each end of a crimped angle web member to each side of the chord shall consist of a weld group made of more than a single line of weld. The design weld length shall include an end return of no less than two times the nominal weld size.

d) Welding Program

1) The manufacturer's welders shall be qualified in accordance with either AWS D1.1 or AWS D1.3 for the applicable weld type, position, and material.

2) Manufacturers shall have a program for establishing weld procedures and operator qualification, and for weld sampling and testing. Each manufacturing facility shall have trained inspectors, and an engineer responsible for all welding procedures.

e) Weld Inspection by Outside Agencies (See Section 5.14)

1) The agency shall arrange for visual inspection to determine that welds meet the acceptance standards of Section 4.5.1.

User Note: Ultrasonic, X-ray, and magnetic particle testing are inappropriate for joists due to the configurations of the components and welds.

4.5.2 Strength

4.5.2.1 Joint Connections: Joint connections shall develop the maximum force due to any of the design loads, but not less than 50 percent of the strength of the member in tension or compression, whichever force is the controlling factor in the selection of the member.

4.5.2.2 Shop Splices: Shop splices shall be permitted to occur at any point in chord or web members. Splices shall be designed for the member force, but not less than 50 percent of the member strength. All component parts comprising the cross section of the chord or web member (including reinforcing plates, rods, etc.) at the point of the splice shall develop a nominal tensile strength of at least 1.2 times the product of the yield strength and the full design area of the chord or web. The "full design area" shall be defined as the minimum required area such that the required stress will be less than the design (LRFD) or allowable (ASD) stress.

User Note: For more information on welding, see Steel Joist Institute Technical Digest 8, "Welding of Open Web Steel Joists and Joist Girders".

4.5.3 Field Splices

Field Splices shall be designed by the manufacturer and shall be either bolted or welded. Splices shall be designed for the member force, but not less than 50 percent of the member strength.

4.5.4 Eccentricity

Members connected at a joint shall have their center of gravity lines meet at a point, where practical. Ends of joists or Joist Girders shall be proportioned to resist bending produced by eccentricity at the support.

For a single component web member, the eccentricity shall be permitted to be neglected where it does not exceed the lesser of three-quarters of the over-all dimension of the chord or 2" (51 mm). This eccentricity, measured in the plane of the joist, shall be the perpendicular distance from the centroidal axis of that web member to the point on the centroidal axis of the chord which is vertically above or below the intersection of the centroidal axis of the web member(s) forming the joint in accordance with Figure 4.5-1.

For a web member composed of at least two shapes, the eccentricity on either side of the neutral axis of chord members, measured in the plane of the joist at the joint work point, shall be permitted to be neglected where the web intersect point does not exceed one and one-half times the distance between the neutral axis and the back of the chord in accordance with Figure 4.5-2.

If these limits are exceeded, provision shall be made for the stresses due to eccentricity.

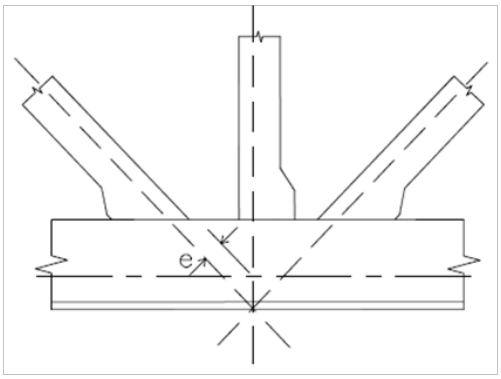

FIGURE 4.5-1

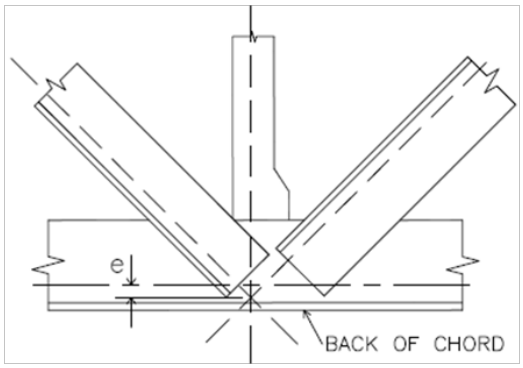

FIGURE 4.5-2

4.6 CAMBER

Steel joists and Joist Girders 100'-0" or less shall have a manufactured camber in accordance with Table 4.6-1:

TABLE 4.6-1

TOP CHORD LENGTH		APPROXIMATE CAMBER	
20'-0″	(6096 mm)	1/4″	(6 mm)
30'-0″	(9144 mm)	3/8″	(10 mm)
40'-0″	(12192 mm)	5/8″	(16 mm)
50'-0″	(15240 mm)	1″	(25 mm)
60'-0″	(18288 mm)	1 1/2″	(38 mm)
70'-0″	(21336 mm)	2″	(51 mm)
80'-0″	(24384 mm)	2 3/4″	(70 mm)
90'-0″	(27432 mm)	3 1/2″	(89 mm)
100'-0″	(30480 mm)	4 1/4″	(108 mm)

For lengths exceeding 100'-0", manufactured camber equal to Span/300 shall be used.

User Note: The specifying professional shall give consideration to coordinating this approximate camber with adjacent framing.

4.7 VERIFICATION OF DESIGN AND MANUFACTURE

User Note: This Section is included as part of this Specification since the verification of design and manufacture is a requirement of any Steel Joist Institute member company in order to be in compliance with this Specification. This Section applies only to a Steel Joist Institute member manufacturer.

4.7.1 Design Calculations

Companies manufacturing any K-Series, LH-Series, DLH-Series Joists or Joist Girders shall submit design data to the Steel Joist Institute, or an independent agency approved by the Steel Joist Institute, for verification of compliance with this Specification. Design data shall be submitted in detail and in the format specified by the Steel Joist Institute.

4.7.2 Tests of Chord and Web Members

Each manufacturer shall, at the time of design review by the Steel Joist Institute, verify by tests that the design, in accordance with Section 4.1 through Section 4.5, provides the theoretical strength of critical members. Such tests shall be evaluated considering the actual yield strength of the members of the test joists.

Material tests for determining mechanical properties of component members shall be conducted.

4.7.3 Tests of Joints and Connections

Each manufacturer shall, at the time of design review by the Steel Joist Institute, verify by shear tests on representative joints of typical joists that connections will meet the provision of Section 4.5.2. Chord and web members shall be permitted to be reinforced for such tests.

4.7.4 In-Plant Inspections

Each manufacturer shall verify their ability to manufacture K-Series, LH-Series, DLH-Series Joists and Joist Girders through periodic In-Plant Inspections. Inspections shall be performed by an independent agency approved by the Steel Joist Institute. The frequency, manner of inspection, and manner of reporting shall be determined by the Steel Joist Institute. The plant inspections shall not represent a guarantee of the quality of any specific joists; this responsibility shall lie fully and solely with the individual manufacturer.

SECTION 5.
APPLICATION

5.1 USAGE

5.1.1 Scope: This Specification shall apply to any type of structure where floors or roofs are to be supported directly by steel joists installed as hereinafter specified or where steel joists are to be supported directly by Joist Girders installed as hereinafter specified. Where joists or Joist Girders are used other than on simple spans under uniformly distributed loading for joists, or under equal concentrated gravity loading for Joist Girders, as prescribed in Section 4.1, they shall be designed to limit the required stresses to those listed in Section 4.2. The magnitude and location of all loads and forces to be considered in the joist or Joist Girder design shall be provided on the structural drawings.

5.1.2 Continuous Frame Action: Where a rigid connection of the bottom chord is to be made to a column or other structural support, the steel joist or Joist Girder is then no longer simply-supported, and the system shall be investigated for continuous frame action by the specifying professional. The specifying professional shall design the supporting structure, including the design of columns, connections, and moment plates. This design shall account for the stresses caused by lateral forces and the stresses due to connecting the bottom chord to the column or other structural support.

The designed detail of a rigid type connection and moment plates shall be shown on the structural drawings by the specifying professional. The moment plates shall be furnished by other than the joist manufacturer.

User Note: For further reference concerning continuous frame action and their connections, refer to Steel Joist Institute Technical Digest No. 11, “Design of Lateral Load Resisting Frames Using Steel Joists and Joist Girders”.

5.2 SPAN

Except for joist substitutes, the span of a joist or Joist Girder shall not exceed 24 times the depth. Design length shall equal the span minus 4 inches (102 mm) as shown in Figure 5.2-1 “Definition of Span”.

Figure 5.2-1
DEFINITION OF SPAN
(U. S. Customary Units)

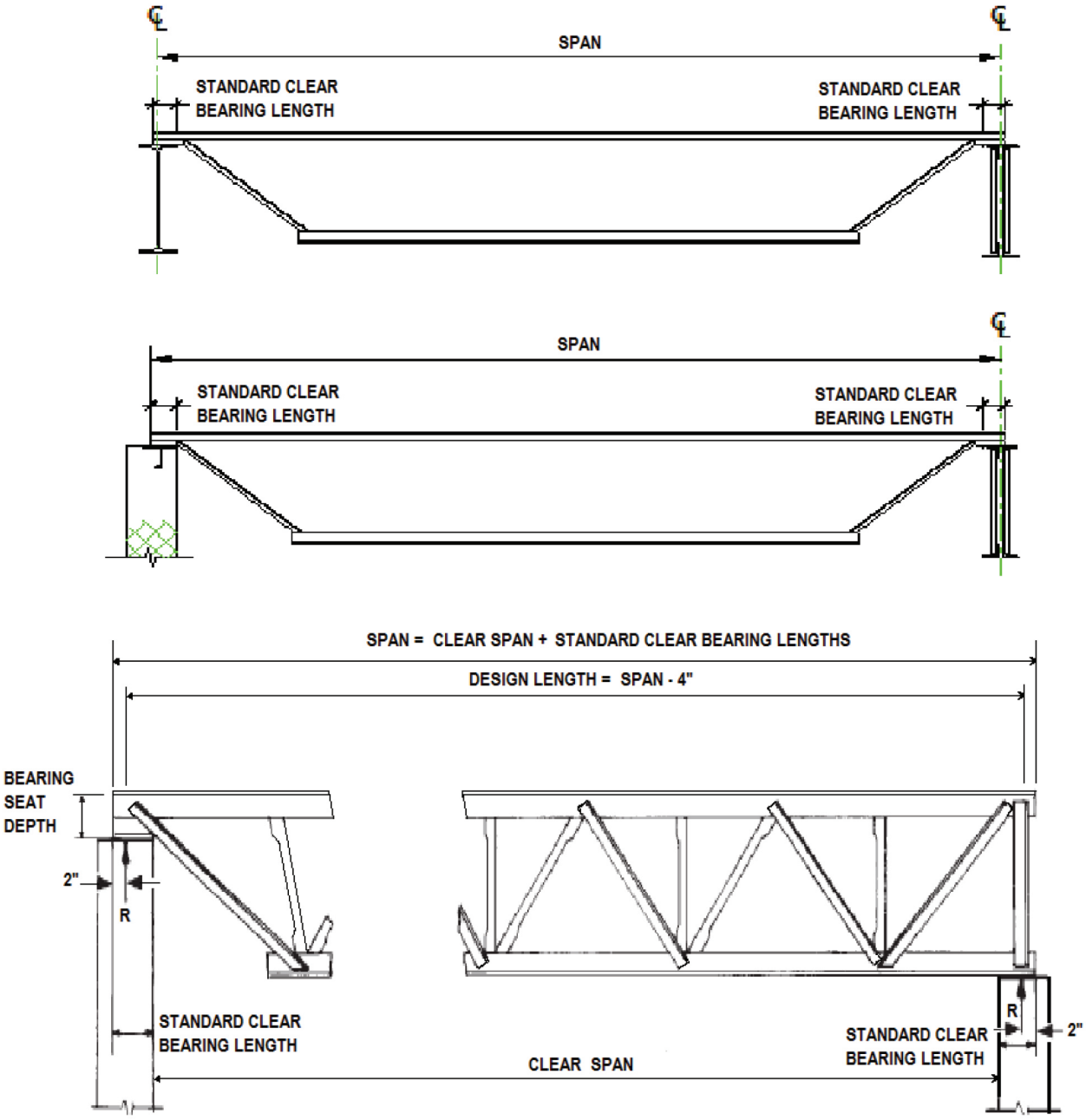

NOTES:

1) DESIGN LENGTH = SPAN - 4"
2) MINIMUM BEARING LENGTHS SHALL MEET THE REQUIREMENTS OF SECTION 5.4. BEARING LENGTHS SHOWN MAY VARY BETWEEN STANDARD CLEAR BEARING AND MINIMUM BEARING LENGTH.
3) PARALLEL CHORD JOISTS INSTALLED TO A SLOPE GREATER THAN 1/2 INCH PER FOOT SHALL USE A SPAN DEFINED BY THE LENGTH ALONG THE SLOPE.

5.3 DEPTH

Steel joists or Joist Girders shall have either parallel chords or a top chord pitch of up to 1/2 inch per foot (1:24). The steel joist or Joist Girder designation depth or nominal depth shall be the depth at mid-span, except for double pitched joists which shall be the depth at the ridge.

5.4 END SUPPORTS

Consideration of the reactions, vertical and lateral, shall be taken by the specifying professional in the design of the steel support, or the steel bearing plate on masonry or concrete. The standard location of the end reaction shall be 2" (51 mm) from the end of the span (exclusive of extensions) at each end of the steel joist or Joist Girder as shown in Figure 5.2-1 "Definition of Span". The standard end reaction location shall require the minimum bearing lengths shown in Table 5.4-1.

TABLE 5.4-1

JOIST SECTION NUMBER[1]	STANDARD CLEAR BEARING LENGTH	MINIMUM BEARING LENGTH ON STEEL
K1-12	4" (102 mm)	2 ½" (64 mm)
LH02-06	6" (152 mm)	2 ½" (64 mm)
LH07-17, DLH10-17, JG	6" (152 mm)	4" (102 mm)
LH/DLH18-25, JG[2]	6" (152 mm)	6" (152 mm)

(1) Last digit(s) of joist designation shown in Load Table.
(2) **Joist Girders** with a self weight greater than 50 plf (0.73 kN/m).

If the specifying professional requires the end reaction to be located at a distance from the face of support more than the standard clear bearing length values shown in Table 5.4-1 minus 2" (51 mm), the structural drawings shall indicate the required special location of the end reaction. The seat depth shall also be increased to the special minimum bearing seat depth per Table 5.4-3.

5.4.1 Masonry and Concrete

5.4.1.1 Scope: A K-Series, LH-Series, DLH-Series Joist or Joist Girder end supported by masonry or concrete shall bear on steel bearing plates and shall be designed as steel bearing.

5.4.1.2 Bearing Length: The ends of K-Series Joists shall extend a distance of not less than 4 inches (102 mm) over the face of masonry or concrete support unless it is deemed necessary to bear less than 4 inches (102 mm) over the support. The ends of LH-Series, DLH-Series Joists and Joist Girders shall extend a distance of not less than 6 inches (152 mm) over the face of masonry or concrete support unless it is deemed necessary to bear less than 6 inches (152 mm) over the support.

5.4.1.3 Anchorage: K-Series, **LH**-Series, **DLH**-Series Joists and **Joist Girders** shall be anchored to the steel bearing plate per Section 5.7.

The steel bearing plate shall be located not more than 1/2 inch (13 mm) from the face of the wall. If the steel bearing plate is located more than 1/2 inch (13 mm) from the face of the wall, or the minimum bearing over the masonry or concrete support cannot be provided as shown in Table 5.4-1, special consideration shall be given to the design of the steel bearing plate and the masonry or concrete by the specifying professional.

The steel bearing plate width shall not be less than that shown in Table 5.4-2 perpendicular to the length of the joist. The plate is to be designed by the specifying professional and shall be furnished by other than the joist manufacturer.

TABLE 5.4-2

JOIST SECTION NUMBER[1]	MINIMUM BEARING PLATE WIDTH
K1-12, LH02-06	7” (178 mm)
LH07-17, DLH10-17, JG	9” (229 mm)
LH/DLH18-25, JG[2]	14” (356 mm)
(1) Last digit(s) of joist designation shown in Load Table. (2) Joist Girders with a self weight greater than 50 plf (0.73 kN/m).	

5.4.2 Steel

The ends of K-Series, LH-Series, DLH-Series Joists and Joist Girders shall be anchored to the support per Section 5.7.

5.4.3 Bearing Depth

The standard non-sloping bearing seat depths shall be as shown in Table 5.4-3. If the steel joist slopes 3/8 inch per foot or greater, the high end bearing seat shall require additional depth due to the slope.

User Note: The Steel Joist Institute Code of Standard Practice provides guidance for determining additional seat depth requirements for sloped joists.

TABLE 5.4-3

JOIST SECTION NUMBER[1]	STANDARD BEARING SEAT DEPTH	STANDARD CLEAR BEARING LENGTH	SPECIAL MINIMUM BEARING SEAT DEPTH[2]
K1-12	2 ½” (64 mm)	4” (102 mm)	0.6 x (RP + 2 ½” (64 mm))
LH02-17, DLH10-17	5” (127 mm)	6” (152 mm)	0.6 x (RP + 4” (102 mm))
LH/DLH18-25	7 ½” (191 mm)	6” (152 mm)	0.6 x (RP + 4“ (102 mm)) + 2 ½” (64 mm)
JG	7 ½” (191 mm)	6” (152 mm)	RP + 4” (102 mm)
(1) Last digit(s) of joist designation shown in Load Table. (2) RP is equal to the distance the reaction is to occur from the face of the wall or leading edge of support member. The equation is not applicable for the high end of a sloped joist or Joist Girder.			

When the specifying professional requires the steel joist or Joist Girder reaction to occur at or near the centerline of the wall or other support, a special bearing seat depth shall be required and a note shall be placed on the structural drawings identifying where the reaction is to occur. The specified bearing seat depth shall be increased according to Table 5.4-3 to allow for this special requirement.

5.5 BRIDGING or BRACING

Joist Girders shall be proportioned such that they can be erected without bridging. Therefore, the following requirements shall be met:

a) The ends of the bottom chord shall be restrained from lateral movement to brace the girder from overturning. For Joist Girders at columns in steel frames, restraint shall be provided by a stabilizer plate on the column.

b) No other loads shall be placed on the Joist Girder until the steel joists bearing on the Joist Girder are in place and positively attached to the Joist Girder.

User Note: See Section 5.12 for bridging or bracing required for uplift forces.

Steel joist top and bottom chord bridging shall be required and shall consist of one or both of either horizontal or diagonal bridging.

5.5.1 Horizontal Bridging

Horizontal bridging lines shall consist of continuous horizontal steel members. The ℓ/r ratio of the bridging member shall not exceed 300, where ℓ is the distance in inches (millimeters) between attachments and r is the least radius of gyration of the bridging member.

5.5.2 Diagonal Bridging

Diagonal bridging lines shall consist of cross-bracing with a ℓ/r ratio of not more than 200, where ℓ is the distance in inches (millimeters) between connections and r is the least radius of gyration of the bracing member. Where cross-bracing members are connected at their point of intersection, the ℓ distance shall be taken as the distance in inches (millimeters) between connections at the point of intersection of the bridging members and the connections to the chords of the joists.

5.5.2.1 Diagonal Erection Bridging

User Note: Joists exhibit varying degrees of stability dependent upon the span, depth, member sizes, self weight and other parameters. Bolted diagonal Erection Bridging which must be installed prior to releasing hoisting cables may be required.

Where required as identified below, bolted diagonal Erection Bridging shall be required and shall be in accordance with the following:

(a) For joist spans up through and including 60 feet (18288 mm) in length;

Welded horizontal bridging shall be permitted except where the row of bridging nearest the center is required to be bolted diagonal Erection Bridging as indicated by the **Red** shaded area in the Load Tables. Hoisting cables shall not be released until this row of bolted diagonal Erection Bridging is completely installed and anchored.

Bolted diagonal Erection Bridging shall be provided as required in the SJI Load Tables wherever a standard SJI Section Number designation is specified. For spans 60 feet (18288mm) or less, in the absence of a standard SJI Section Number designation, minimum bolted diagonal Erection Bridging requirements shall be determined by:

1) Matching the joist design to an equivalent standard SJI Section Number designation to determine the span at which Erection Bridging is needed as designated in the tables; or
2) Using Equation 5.5-1 to determine the joist stability and the need for Erection Bridging.

$$W = \frac{-b + \sqrt{b^2 - 4 \cdot a \cdot c}}{2 \cdot a} \quad ; \qquad \text{If, } \frac{w_u}{w_{actual}} > 1.00 \text{ Erection Bridging is not required.} \tag{5.5-1}$$

$$a = \left(\frac{\pi^2 + 3}{24} \right)^2$$

$$b = P \cdot \frac{\pi^2 + 3}{12} \cdot \frac{\pi^2 + 4}{16} - \frac{\pi^4 \cdot E \cdot I_y}{2 \cdot (k \cdot L)^3} \cdot \left[\beta_x \cdot \left(\frac{\pi^2 - 3}{24} \right) - \frac{y_o}{2} \right]$$

$$c = (P)^2 \left(\frac{\pi^2 + 4}{16} \right)^2 - \frac{\pi^4 \cdot E \cdot I_y}{2 \cdot (k \cdot L)^3} \cdot \left[P \cdot \left(\beta_x \cdot \frac{\pi^2 - 4}{16} - a_e \right) + \frac{\pi^4 \cdot E \cdot C_w}{2 \cdot (k \cdot L)^3} + \frac{\pi^2 \cdot G \cdot J}{2 \cdot k \cdot L} \right]$$

Where:

P = Factored weight of erector = 1.2 x (assumed weight of 250 lbs.) = 300 lbs. (1334 N)

E = Modulus of elasticity= 29,000,000 psi (200,000 MPa)

I_y = Joist moment of inertia about y-axis, in.^{4} (mm^4) $\quad I_y = I_{yt} + I_{yb}$

I_{yt} = Top chord moment of inertia about y-axis, in.^{4} (mm^4)

I_{yb} = Bottom chord moment of inertia about y-axis, in.^{4} (mm^4)

L = Joist Span, in. (mm)

k = Effective length factor = 0.85

β_x = Cross-Sectional parameter $\quad \beta_x = \frac{1}{I_x}\left[A_b \cdot (d_e - y)^3 - A_t \cdot y^3\right] - 2 \cdot y_o$

A_b = Area of bottom chord, in.^{2} (mm^2)

A_t = Area of top chord, in.^{2} (mm^2)

d_e = Joist effective depth, in.(mm) $\quad d_e = d - y_t - y_b$

y_t = Neutral axis of top chord, in. (mm)

y_b = Neutral axis of bottom chord, in. (mm)

y = Distance from centroid of top chord to centroid of cross section, in. (mm) $\quad y = \frac{A_b \cdot d_e}{A_t + A_b}$

I_x = Joist moment of inertia about x-axis, in.^{4} (mm^4) $\quad I_x = A_t y^2 + A_b (d_e - y)^2$

y_o = Distance from centroid of cross section to shear center, in. (mm) $\quad y_o = -y + \frac{I_{yb} \cdot d_e}{I_y}$

a_e = Vertical location of load P from shear center (locate at joist center of gravity), in. (mm), where $a_e = y_o$

C_w = Warping constant $\quad C_w = \frac{d_e^{\,2} \cdot I_{yb} \cdot I_{yt}}{I_y}$

G = Shear modulus, psi (MPa) $\quad G = 0.385E$

J = St. Venant torsion constant, in.^{4} (mm^4) $\quad J = \frac{1}{3}\left(A_t \cdot t_t^{\,2} + A_b \cdot t_b^{\,2}\right)$

t_t = Thickness of top chord, in. (mm)

t_b = Thickness of top chord, in. (mm)

w_u = Ultimate lateral buckling load $\quad w_u = \frac{W \cdot 12}{L}$, plf $\quad w_u = \frac{W}{L}$, (kN/m)

w_{actual} = Joist self-weight, plf (kN/m)

b) For joist spans greater than 60 feet (18288 mm) in length;
Bolted diagonal Erection Bridging shall be used as indicated by the **Blue** and Gray shaded areas of the Load Tables. Hoisting cables shall not be released until all rows of bolted diagonal Erection Bridging are completely installed and anchored. Where the joist spacing is less than 0.70 x joist depth, bolted horizontal bridging shall be used in addition to bolted diagonal Erection Bridging.

c) The bolted diagonal Erection Bridging determined by Section 5.5.2.1a and Section 5.5.2.1b shall be considered a minimum. This bolted diagonal Erection Bridging shall be indicated on the placement plans.

User Note: Joists with special profiles having a higher center of gravity as compared to a parallel chord joist, joists which are canted, or joists having any condition which may create instability, may require additional bridging and/or special erection methods.

5.5.3 Quantity and Spacing of Bridging

5.5.3.1 Scope: Bridging shall be properly spaced and anchored to support the decking and the employees prior to the attachment of the deck to the top chord. The maximum spacing between lines of bridging, ℓ_{brmax} shall be the lesser of,

$$\ell_{brmax} = \left(124 + 0.67\, d_j + 28\frac{d_j}{L}\right) r_y \text{, in.} \tag{5.5-2a}$$

$$\ell_{brmax} = \left(124 + 0.026\, d_j + 0.34\frac{d_j}{L}\right) r_y \text{, mm} \tag{5.5-2b}$$

or,

$$\ell_{brmax} = 170\ r_y \tag{5.5-3}$$

Where:

d_j is the steel joist depth, in. (mm)

L is the joist span length, ft. (m)

r_y is the radius of gyration of the top chord about the vertical axis of the joist cross section, in. (mm)

5.5.3.2 Number of Rows: The number of rows of top chord bridging shall not be less than as shown in Table 5.5-1 and the spacing shall meet the requirements of Equations 5.5-2 and 5.5-3. The number of rows of bottom chord bridging, including bridging required per Section 5.12, shall not be less than the number of top chord rows. Rows of bottom chord bridging shall be permitted to be spaced independently of rows of top chord bridging. The spacing of rows of bottom chord bridging shall meet the slenderness requirement of Section 4.3 and any specified strength requirements.

5.5.3.3 DLH Joist Section 21 and Greater: For DLH-Series joist Section Number 21 and greater, bridging shall be installed near a bottom chord panel point or an extra web member shall be furnished to brace the bottom chord for the vertical component of the bridging force equal to the horizontal bracing force.

TABLE 5.5-1

U.S. CUSTOMARY UNITS

NUMBER OF ROWS OF TOP CHORD BRIDGING[2]

Section Number[1]	Joist Depth	1 Row	2 Rows	3 Rows	4 Rows	5 Rows	6 Rows	7 Rows	8 Rows	9 Rows
K1	All	17	>17 to 26	>26 to 28						
K2	All	21	>21 to 30	>30 to 32						
K3	All	18	>18 to 26	>26 to 40						
K4	All	20	>20 to 30	>30 to 41	>41 to 48					
K5	12K to 24K	20	>20 to 30	>30 to 42	>42 to 48					
	26K	28	>28 to 41	> 41 to 52						
K6	14K to 24K	20	>20 to 31	>31 to 42	>42 to 48					
	26K & 28K	28	>28 to 41	>41 to 54	>54 to 56					
K7	16K to 24K	23	>23 to 34	>34 to 48						
	26K to 30K	29	>29 to 44	>44 to 60						
K8	24K	25	>25 to 39	>39 to 48						
	26K to 30K	29	>29 to 44	>44 to 60						
K9	16K to 24K	22	>22 to 34	>34 to 48						
	26K to 30K	29	>29 to 44	>44 to 60						
K10	18K to 24K	22	>22 to 38	>38 to 48						
	26K to 30K	29	>29 to 48	>48 to 60						
K11	22K	24	>24 to 39	>39 to 44						
	30K	34	>34 to 49	>49 to 60						
K12	24K	25	>25 to 43	>43 to 48						
	26K to 30K	29	>29 to 47	>47 to 60						
LH02-03	All	20	>20 to 30	>30 to 40	>40					
LH04-05	All	22	>22 to 33	>33 to 44	>44 to 55	>55				
LH06-08	All	26	>26 to 45	>45 to 60	>60 to 75	>75				
LH09	All	26	>26 to 48	>48 to 64	>64 to 80	>80				
LH/DLH10	All	28	>28 to 54	>54 to 72	>72 to 90	>90				
LH/DLH11	All	30	>30 to 54	>54 to 72	>72 to 90	>90 to 108	>108			
LH/DLH12	All	34	>34 to 55	>55 to 74	>74 to 92	>92 to 111	>111			
LH/DLH13	All	36	>36 to 63	>63 to 84	>84 to 105	>105 to 126	>126			
LH/DLH14	All	38	>38 to 64	>64 to 86	>86 to 107	>107 to 129	>129			
LH/DLH15	All	42	>42 to 73	>73 to 98	>98 to 122	>122 to 147	>147			
LH/DLH 16-17	All	44	>44 to 75	>75 to 100	>100 to 125	>125 to 150	>150 to 175	>175		
LH/DLH 18-20	All	52	>52 to 78	>78 to 104	>104 to 130	>130 to 156	>156 to 182	>182 to 208	>208 to 234	>234
LH/DLH 21-25	All	60	>60 to 90	>90 to 120	>120 to 150	>150 to 180	>180 to 210	>210		

(1) Last digit(s) of joist designation shown in Load Table.

(2) Distances are Joist Span lengths in feet – See “Definition of Span” Figure 5.2-1. Refer to the Joist Load Table and Specification Section 6 for required bolted diagonal bridging and additional stability requirements. See Section 5.12 for additional bridging required for uplift design.

5.5.4 Sizing of Bridging

Horizontal and diagonal bridging shall be capable of resisting the nominal unfactored horizontal compressive force, P_{br} given in Equation 5.5-4.

$$P_{br} = 0.0025\ n\ A_t\ F_{construction}\ \text{, kips (N)} \tag{5.5-4}$$

Where:

n = 8 for horizontal bridging

n = 2 for diagonal bridging

A_t = cross sectional area of joist top chord, in.^{2} (mm^2)

$F_{construction}$ = assumed ultimate stress in top chord to resist construction loads, determined in accordance with the following:

$$F_{construction} = \left(\frac{\pi^2 E}{\left(\frac{0.9\,\ell_{brmax}}{r_y} \right)^2} \right) \geq 12.2\,\text{ksi} \tag{5.5-5a}$$

$$F_{construction} = \left(\frac{\pi^2 E}{\left(\frac{0.9\,\ell_{brmax}}{r_y} \right)^2} \right) \geq 84.1\,\text{MPa} \tag{5.5-5b}$$

Where:

E = Modulus of Elasticity of steel = 29,000 ksi (200,000 MPa)

and $\frac{\ell_{brmax}}{r_y}$ is determined from Equations 5.5-2 or 5.5-3

The bridging nominal horizontal unfactored compressive forces, P_{br}, shall be in accordance with Table 5.5-2.

TABLE 5.5-2

BRIDGING NOMINAL HORIZONTAL UNFACTORED COMPRESSIVE FORCE					
JOIST SECTION NUMBER[1]	HORIZONTAL BRIDGING P_{br} (n=8)		REQUIRED BRIDGING CONNECTION WELD[2]	DIAGONAL BRIDGING P_{br} (n=2)	
	Lbs.	(N)	In.	Lbs.	(N)
K1-8	340	(1512)	1/8" x 1" (3mm x 25mm)	85	(378)
K9-10, LH02-03	450	(2002)		113	(503)
K11-12, LH04-05	560	(2491)		140	(623)
LH06-08	750	(3336)		188	(836)
LH09	850	(3781)		213	(945)
LH/DLH10	900	(4003)		225	(1001)
LH/DLH11	950	(4226)		238	(1056)
LH/DLH12	1100	(4893)		275	(1223)
LH/DLH13	1200	(5338)		300	(1334)
LH/DLH14	1300	(5783)		325	(1446)
LH/DLH15	1450	(6450)		363	(1612)
LH/DLH16-17	1850	(8229)	1/8" x 1 ½ " (3mm x 38mm)	463	(2057)
LH/DLH18-20	2350	(10453)		585	(2602)
LH/DLH21-22	3150	(14012)	1/8" x 2" (3mm x 51mm)	790	(3514)
LH/DLH23-24	4130	(18371)	1/8" x 3" (3mm x 76mm)	1035	(4604)
LH/DLH25	4770	(21218)		1195	(5316)
(1) Last digit(s) of joist designation shown in Load Table. (2) Or other connection type designed for the required force.					

5.5.5 Connections

Connections to the joist chords shall be made by welding or mechanical means and shall be capable of resisting the unfactored or nominal horizontal force, P_{br}, of Equation 5.5-4 but not less than 700 pounds (3114 N).

5.5.6 Bottom Chord Bearing Joists

Where bottom chord bearing joists are utilized, a row of diagonal bridging shall be provided near the support(s). This bridging shall be installed and anchored before the hoisting cable(s) is released.

5.6 INSTALLATION OF BRIDGING

Bridging shall support the top and bottom chords against lateral movement during the construction period and shall hold the steel joists in the approximate position as shown on the joist placement plans.

The ends of all bridging lines terminating at walls or beams shall be anchored thereto.

5.7 BEARING SEAT ATTACHMENTS

5.7.1 Masonry and Concrete

Ends of K-Series, LH-Series, and DLH-Series Joists and Joist Girders resting on steel bearing plates on masonry or structural concrete shall be attached thereto, as shown in Table 5.7-1, with a minimum of two fillet welds, or with two bolts, or the equivalent.

5.7.2 Steel

Ends of K-Series, LH-Series, and DLH-Series Joists and Joist Girders resting on steel supports shall be attached thereto, as shown in Table 5.7-1, with a minimum of two fillet welds, or with two bolts, or the equivalent. Where K-Series, LH-Series and DLH-Series Joists and Joist Girders are used to provide lateral stability to the supporting member, the final connection shall be made by welding or as designated by the specifying professional.

TABLE 5.7-1

JOIST SECTION NUMBER [1]	MINIMUM FILLET WELD	MINIMUM BEARING SEAT BOLTS FOR ERECTION
K1-12	2– 1/8” x 2 1/2” (3 x 64 mm)	2– 1/2” (13 mm) A307
LH02-06	2– 3/16” x 2 1/2” (5 x 64 mm)	
LH07-17, DLH10-17, JG	2– 1/4” x 2 1/2” (6 x 64 mm)	2– 3/4” (19 mm) A307
LH/ DLH18-25, JG[2]	2– 1/4” x 4” (6 x 102 mm)	2– 3/4” (19 mm) A325

(1) Last digit(s) of joist designation shown in load table.
(2) Joist Girders with a self weight greater than 50 plf (0.73 kN/m).

5.7.3 Uplift

Where uplift forces are a design consideration, roof joists shall be anchored to resist such forces and shall meet the requirements of Section 5.12.

5.8 JOIST SPACING

Joists shall be spaced so that the loading on each joist does not exceed the design load (LRFD or ASD) for the particular joist designation and span as shown in the applicable load tables.

5.9 FLOOR AND ROOF DECKS

5.9.1 Material

Floor and roof decks shall be permitted to consist of cast-in-place or pre-cast concrete or gypsum, cold-formed steel, wood, or other suitable material capable of supporting the required load at the specified joist spacing.

5.9.2 Thickness

Cast-in-place slabs shall be not less than 2 inches (51 mm) thick.

5.9.3 Centering

Centering for cast-in-place slabs shall be permitted to be ribbed metal lath, corrugated steel sheets, paper-backed welded wire fabric, removable centering or any other suitable material capable of supporting the slab at the designated joist spacing.

Centering shall not cause lateral displacement or damage to the top chord of joists during installation or removal of the centering or placing of the concrete.

5.9.4 Bearing

Slabs or decks shall bear uniformly along the top chords of the joists.

5.9.5 Attachments

The spacing of attachments along the joist top chord shall not exceed 36 inches (914 mm). Such attachments of the slab or deck to the top chords of joists shall be capable of resisting the forces given in Table 5.9-1.

TABLE 5.9-1

JOIST SECTION NUMBER[1]	NOMINAL FORCE REQUIRED[2]
K1-12	100 lbs/ft. (1.46 kN/m)
LH02-04	120 lbs/ft. (1.75 kN/m)
LH05-09	150 lbs/ft. (2.19 kN/m)
LH/DLH10-17	200 lbs/ft. (2.92 kN/m)
LH/DLH18-19	250 lbs/ft. (3.65 kN/m)
LH/DLH20-21	300 lbs/ft. (4.38 kN/m)
LH/DLH22-24	420 lbs/ft. (6.13 kN/m)
LH/DLH25	520 lbs/ft. (7.59 kN/m)
(1) Last digit(s) of joist designation shown in Load Table. (2) Nominal bracing force is unfactored.	

5.9.6 Wood Nailers

Where wood nailers are used, such nailers in conjunction with deck or slab shall be firmly attached to the top chords of the joists in conformance with Section 5.9.5.

5.9.7 Joist With Standing Seam Roofing or Laterally Unbraced Top Chords

Where the roof systems do not provide lateral stability for the steel joists in accordance with Section 5.9.5 sufficient stability shall be provided to brace the steel joists laterally under the full design load. For this condition, the compression chord design shall include the effects of both the in-plane and out-of-plane buckling of the steel joist (e.g., buckling about the vertical axis of the steel joist cross section). In any case where the attachment requirement of Section 5.9.5 is not achieved, out-of-plane strength shall be achieved by adjusting the bridging spacing and/or increasing the compression chord area and the y-axis radius of gyration. The effective slenderness ratio about the vertical axis equals $0.94\ L/r_y$; where L is the bridging spacing in inches (millimeters) and r_y is the radius of gyration of the top chord in inches (millimeters). The maximum bridging spacing shall not exceed that specified in Section 5.5.3.

User Note: Some examples of roof systems which may not provide adequate top chord lateral stability may be standing seam roofs, skylights, or other openings which do not provide top chord attachments per Section 5.9.5.

Horizontal bridging members attached to the compression chords and their anchorages shall be designed for a compressive axial force, P_{br}, given in Equation 5.9-1.

$$P_{br} = 0.001nP + 0.004P\sqrt{n} \geq 0.0025nP, \text{ kips (N)} \quad (5.9\text{-}1)$$

Where n is the number of joists between end anchors and P is the chord design force in kips (N)

The attachment force between the horizontal bridging member and the compression chord shall be 0.01P. Horizontal bridging attached to the tension chords shall be proportioned so that the slenderness ratio between attachments does not exceed 300. Diagonal bridging shall be proportioned so that the slenderness ratio between attachments does not exceed 200.

5.10 DEFLECTION

The deflection due to the design live load shall not exceed the following:

Floors: 1/360 of span.
Roofs: 1/360 of span where a plaster ceiling is attached or suspended, or
1/240 of span for all other cases.

The specifying professional shall give consideration to the effects of deflection and vibration in the selection of joists.

User Note: For further information on vibration, refer to Steel Joist Institute Technical Digest 5, “Vibration of Steel Joist-Concrete Slab Floors".

5.11 PONDING

The ponding investigation shall be performed by the specifying professional.

User Note: For further reference, refer to Steel Joist Institute Technical Digest 3, “Structural Design of Steel Joist Roofs to Resist Ponding Loads” and AISC 360.

5.12 UPLIFT

Where uplift forces due to wind are a design requirement, these forces shall be indicated on the structural drawings in terms of NET uplift in pounds per square foot (Pascals). The structural drawings shall indicate if the net uplift is based upon an LRFD or ASD load combination. When these forces are specified, they shall be considered in the design of joists, Joist Girders, and required bridging or bracing. Wherever uplift due to wind forces is a design consideration, the following shall be required:

a) For joists, a single line of **bottom chord** bridging shall be provided near the first bottom chord panel points.

b) For **Joist Girders**, if the ends of the bottom chord are not strutted and extended to column stabilizer plates, bracing shall be provided near the first bottom chord panel points.

User Note: For further reference, refer to Steel Joist Institute Technical Digest 6, “Structural Design of Steel Joist Roofs to Resist Uplift Loads”.

5.13 DIAPHRAGMS AND COLLECTORS

Where diaphragm collector forces due to wind or seismic forces are a design requirement, these forces shall be indicated on the structural drawings. The structural drawings shall indicate the nominal (unfactored) forces. The structural drawings shall also indicate the Seismic Design Category, and the Seismic Force Resisting System type, and applicable seismic design coefficients. When this data is specified, joist collectors or chords in horizontal diaphragm systems, shall be designed in conformance with the provisions of Section 4 through Section 6. End connections and splices in joists incorporated into Seismic Force Resisting System (SFRS) as horizontal diaphragms as collectors or chords shall adhere to the requirements stipulated by the applicable building code.

5.14 INSPECTION

Joists shall be inspected by the manufacturer before shipment to verify compliance of materials and workmanship with the requirements of this Specification.

User Note: If the purchaser requires an inspection of the steel joists or Joist Girders by someone other than the manufacturer's own inspectors, they shall be permitted to reserve the right to do so in their "Invitation to Bid" or the accompanying "Job Specifications". Arrangements shall be made with the manufacturer for such inspection of the joists or Joist Girders at the manufacturing shop by the purchaser's inspectors at purchaser's expense.

5.15 PARALLEL CHORD SLOPED JOISTS AND JOIST GIRDERS

The span of a parallel chord sloped joist or Joist Girder shall be defined by the length along the slope. Minimum depth, load-carrying capacity, and bridging requirements shall be determined by the sloped definition of span. The Load Table capacity shall be the component normal to the joist.

SECTION 6
ERECTION STABILITY AND HANDLING

As a minimum, erection stability and handling of joists and Joist Girders shall meet the requirements of this Section 6.

User Note: Additional requirements for erection of steel joists and Joist Girders can be found in Steel Joist Institute Technical Digest No. 9, “Handling and Erection of Steel Joists and Joist Girders”.

6.1 STABILITY REQUIREMENTS

User Note: It is not recommended that an erector climb on unbridged joists, extreme caution shall be exercised since unbridged joists exhibit some degree of instability under the erector's weight.

a) In steel framing, where joists/Joist Girders are utilized at column lines, the joist/Joist Girder shall be field-bolted at the column. Before hoisting cables are released and before an employee is allowed on the joists/Joist Girder the following conditions shall be met:
   1) The seat at each end of the joist/Joist Girder is attached in accordance with Section 5.7. Where a bolted seat connection is used for erection purposes, as a minimum, the bolts shall be snug tightened. The snug tight condition shall be defined as the tightness that exists where all plies of a joint are in firm contact. This shall be attained by a few impacts of an impact wrench or the full effort of an employee using an ordinary spud wrench.
   2) Where stabilizer plates are required the joist/Joist Girder bottom chord shall engage the stabilizer plate.

   During the construction period, the contractor shall provide means for the adequate distribution of loads so that the carrying capacity of any joist or Joist Girder is not exceeded.

b) <u>Before an employee is allowed on the steel joist</u>: BOTH ends of joists at columns (or joists designated as column joists) shall be attached to its supports. For all other joists a minimum of one end shall be attached before the employee is allowed on the joist. The attachment shall be in accordance with Section 5.7.

   Where a bolted seat connection is used for erection purposes, as a minimum, the bolts shall be snug tightened. The snug tight condition shall be defined as the tightness that exists where all plies of a joint are in firm contact. This shall be attained by a few impacts of an impact wrench or the full effort of an employee using an ordinary spud wrench.

c) On steel joists that do not require erection bridging as shown by either the unshaded area of the Load Tables or as determined by Section 5.5.2.1, only one employee shall be allowed on the steel joist until all bridging is installed and anchored.

d) Where the span of the steel joist is within the Red shaded area of the Load Table, or in the absence of a standard SJI Section Number designation and Erection Bridging is required in accordance with Section 5.5.2.1, the following shall apply:

1) The row of bridging nearest the midspan of the steel joist shall be bolted diagonal Erection Bridging; and
2) Hoisting cables shall not be released until this bolted diagonal Erection Bridging is installed and anchored, unless an alternate method of stabilizing the joist has been provided; and
3) No more than one employee shall be allowed on these spans until all other bridging is installed and anchored.

e) Where the span of the steel joist is within the Blue shaded area of the Load Table, the following shall apply:

1) All rows of bridging shall be bolted diagonal bridging; and
2) Hoisting cables shall not be released until the two rows of bolted diagonal Erection Bridging nearest the third points of the steel joist are installed and anchored; and
3) No more than two employees shall be allowed on these spans until all bridging is installed and anchored.

f) Where the span of the steel joist is in the Gray shaded area of the Load Table, the following shall apply:

1) All rows of bridging shall be bolted diagonal bridging; and
2) Hoisting cables shall not be released until all bridging is installed and anchored; and
3) No more than two employees shall be allowed on these spans until all other bridging is installed and anchored.

g) Where permanent bridging terminus points cannot be used during erection, additional temporary bridging terminus points shall be required to provide lateral stability.

h) In the case of bottom chord bearing joists, the ends of the joist shall be restrained laterally per Section 5.5.6 before releasing the hoisting cables.

i) After the joist is straightened and plumbed, and all bridging is completely installed and anchored, the ends of the joists shall be fully connected to the supports in accordance with Section 5.7.

6.2 LANDING AND PLACING LOADS

a) Except as stated in Section 6.2(d), no "construction loads" shall be allowed on the steel joists until all bridging is installed and anchored, and all joist bearing ends are attached.

User Note: For definition of "construction load" see Code of Federal Regulations (CFR), Occupational Safety and Health Administration (OSHA), 29 CFR Part 1926, Safety Standards for Steel Erection; Subpart R - Steel Erection, §1926.751 Definitions; January 18, 2001, Washington, D.C.

b) During the construction period, loads placed on the steel joists shall be distributed so as not to exceed the capacity of the steel joists.

c) The weight of a bundle of joist bridging shall not exceed a total of 1000 pounds (454 kilograms). The bundle of joist bridging shall be placed on a minimum of three steel joists that are secured at one end. The edge of the bridging bundle shall be positioned within 1 foot (0.30 m) of the secured end.

d) No bundle of deck shall be placed on steel joists until all bridging has been installed and anchored and all joist bearing ends attached, unless the following conditions are met:

1) The contractor has first determined from a "qualified person" and documented in a site-specific erection plan that the structure or portion of the structure is capable of supporting the load;
2) The bundle of decking is placed on a minimum of three steel joists;

3) The joists supporting the bundle of decking are attached at both ends;
4) At least one row of bridging is installed and anchored;
5) The total weight of the decking does not exceed 4000 pounds (1816 kilograms); and
6) The edge of the bundle of decking is placed within 1 foot (0.30 meters) of the bearing surface of the joist end.

User Note: For definition of "qualified person" see Code of Federal Regulations (CFR), Occupational Safety and Health Administration (OSHA), 29 CFR Part 1926, Safety Standards for Steel Erection; Subpart R - Steel Erection, §1926.751 Definitions; January 18, 2001, Washington, D.C.

e) The edge of the construction load shall be placed within 1 foot (0.30 meters) of the bearing surface of the joist end.

6.3 FIELD WELDING

All field welding shall be performed in accordance with the structural drawings. Field welding shall not damage the joists or Joist Girders.

On cold-formed steel members whose yield strength has been attained by cold working, and whose as-formed strength is used in the design, the total length of weld at any one point shall not exceed 50 percent of the overall developed width of the cold-formed section.

6.4 HANDLING

Particular attention shall be considered for the handling and erection of K-Series, LH-Series, DLH-Series steel joists and Joist Girders. Damage to the joists and accessories shall be avoided. Hoisting cables shall be attached at panel point locations and those locations shall be selected to minimize erection stresses.

Each joist shall be adequately braced laterally before any loads are applied. If lateral support is provided by bridging, the bridging lines as defined in Section 6.1(c), 6.1(d), 6.1(e), and 6.1(f) shall be anchored to prevent lateral movement.

6.5 FALL ARREST SYSYTEMS

Steel joists and Joist Girders shall not be used as anchorage points for a fall arrest system unless written direction to do so is obtained from a "qualified person".

User Note: For definition of "qualified person" see Code of Federal Regulations (CFR), Occupational Safety and Health Administration (OSHA), 29 CFR Part 1926, Safety Standards for Steel Erection; Subpart R - Steel Erection, §1926.751 Definitions; January 18, 2001, Washington, D.C.

STANDARD LRFD LOAD TABLE

OPEN WEB STEEL JOISTS, K-SERIES

Based on a 50 ksi (345 MPa) Maximum Yield Strength
Adopted by the Steel Joist Institute May 1, 2000
Revised to May 18, 2010 – Effective December 31, 2010

The **BLACK** figures in the Load Table give the TOTAL safe factored uniformly distributed load-carrying capacities, in pounds per linear foot, of **LRFD** K-Series Steel Joists.

The approximate joist weights, in pounds per linear foot (kiloNewtons per meter), given in the Load Table may be added to the other building weights to determine the unfactored DEAD load. In all cases the factored DEAD load, including the joist self-weight, must be deducted from the TOTAL load to determine the factored LIVE load. The approximate joist weights do not include accessories.

The **RED** figures in the Load Table represent the unfactored uniform load, in pounds per linear foot (kiloNewtons per meter), which will produce an approximate joist deflection of 1/360 of the span. This load can be linearly prorated to obtain the unfactored uniform load for supplementary deflection criteria (i.e. an unfactored uniform load which will produce a joist deflection of 1/240 of the span may be obtained by multiplying the **RED** figures by 360/240). In no case shall the prorated, unfactored load exceed the unfactored TOTAL load-carrying capacity of the joist as given in the Standard **ASD** Load Table for Open Web Steel Joists, K-Series.

Where the joist span is in the **RED SHADED** area of the Load Table, the row of bridging nearest the mid span shall be diagonal bridging with bolted connections at chords and intersections. Hoisting cables shall not be released until this row of bolted diagonal bridging is completely installed. The **RED SHADED** area extends up through 60'–0" (18288 mm).

The approximate gross moment of inertia (not adjusted for shear deformation) of a standard joist listed in the Load Table may be determined as follows:

$I_j = 26.767(W)(L^3)(10^{-6})$ in^4 or $2.6953(W)(L^3)(10^{-5})$ mm^4, where W= **RED** figure in the Load Table, and
L = (span – 0.33) in feet or (span – 102) in millimeters

The TOTAL safe factored uniformly distributed load-carrying capacities, in pounds per linear foot (kiloNewtons per meter), of **LRFD** K-Series Steel Joists shall not exceed 825 plf (12.03 kN/m) for spans shorter than what is explicitly shown in the Load Table. The maximum prorated unfactored RED load shall not exceed 550 plf (8.02 kN/m) (the TOTAL load-carrying capacity of the joist as given in the Standard **ASD** Load Table for Open Web Steel Joists, K-Series).

Loads for span increments not explicitly given in the Load Table may be determined using linear interpolation between the load values given in adjacent span columns.

For the proper handling of concentrated and/or varying loads, see Section 2.4 in the Code of Standard Practice for Steel Joist and Joist Girders.

LRFD

STANDARD LOAD TABLE FOR OPEN WEB STEEL JOISTS, K-SERIES
Based On A 50 ksi Maximum Yield Strength - Loads Shown In Pounds Per Linear Foot (plf)

Joist Designation	10K1	12K1	12K3	12K5	14K1	14K3	14K4	14K6	16K2	16K3	16K4	16K5	16K6	16K7	16K9
Depth (in.)	10	12	12	12	14	14	14	14	16	16	16	16	16	16	16
Approx. Wt (lbs./ft.)	5.0	5.0	5.7	7.1	5.2	6.0	6.7	7.7	5.5	6.3	7.0	7.5	8.1	8.6	10.0
Span (ft.) ↓															
10	825 550														
11	825 542														
12	825 455	825 550	825 550	825 550											
13	718 363	825 510	825 510	825 510											
14	618 289	750 425	825 463	825 463	825 550	825 550	825 550	825 550							
15	537 234	651 344	814 428	825 434	766 475	825 507	825 507	825 507							
16	469 192	570 282	714 351	825 396	672 390	825 467	825 467	825 467	825 550	825 550	825 550	825 550	825 550	825 550	825 550
17	415 159	504 234	630 291	825 366	592 324	742 404	825 443	825 443	768 488	825 526	825 526	825 526	825 526	825 526	825 526
18	369 134	448 197	561 245	760 317	528 272	661 339	795 397	825 408	684 409	762 456	825 490	825 490	825 490	825 490	825 490
19	331 113	402 167	502 207	681 269	472 230	592 287	712 336	825 383	612 347	682 386	820 452	825 455	825 455	825 455	825 455
20	298 97	361 142	453 177	613 230	426 197	534 246	642 287	787 347	552 297	615 330	739 386	825 426	825 426	825 426	825 426
21		327 123	409 153	555 198	385 170	483 212	582 248	712 299	499 255	556 285	670 333	754 373	822 405	825 406	825 406
22		298 106	373 132	505 172	351 147	439 184	529 215	648 259	454 222	505 247	609 289	687 323	747 351	825 385	825 385
23		271 93	340 116	462 150	321 128	402 160	483 188	592 226	415 194	462 216	556 252	627 282	682 307	760 339	825 363
24		249 81	312 101	423 132	294 113	367 141	442 165	543 199	381 170	424 189	510 221	576 248	627 269	697 298	825 346
25					270 100	339 124	408 145	501 175	351 150	390 167	469 195	529 219	576 238	642 263	771 311
26					249 88	313 110	376 129	462 156	324 133	360 148	433 173	489 194	532 211	592 233	711 276
27					231 79	289 98	349 115	427 139	300 119	334 132	402 155	453 173	493 188	549 208	658 246
28					214 70	270 88	324 103	397 124	279 106	310 118	373 138	421 155	459 168	510 186	612 220
29									259 95	289 106	348 124	391 139	427 151	475 167	570 198
30									241 86	270 96	324 112	366 126	399 137	444 151	532 178
31									226 78	252 87	304 101	342 114	373 124	415 137	498 161
32									213 71	237 79	285 92	321 103	349 112	388 124	466 147

LRFD

STANDARD LOAD TABLE FOR OPEN WEB STEEL JOISTS, K-SERIES
Based On A 50 ksi Maximum Yield Strength - Loads Shown In Pounds Per Linear Foot (plf)

Joist Designation	18K3	18K4	18K5	18K6	18K7	18K9	18K10	20K3	20K4	20K5	20K6	20K7	20K9	20K10	22K4	22K5	22K6	22K7	22K9	22K10	22K11
Depth (In.)	18	18	18	18	18	18	18	20	20	20	20	20	20	20	22	22	22	22	22	22	22
Approx. Wt. (lbs./ft.)	6.4	7.2	7.7	8.4	8.9	10.1	11.6	6.5	7.2	7.7	8.4	8.9	10.1	11.6	7.3	7.7	8.5	9.0	10.2	11.7	11.9
Span (ft.) ↓																					
18	825	825	825	825	825	825	825														
	550	550	550	550	550	550	550														
19	771	825	825	825	825	825	825	825	825	825	825	825	825	825							
	494	523	523	523	523	523	523	550	550	550	550	550	550	550							
20	694	825	825	825	825	825	825	775	825	825	825	825	825	825							
	423	490	490	490	490	490	490	517	550	550	550	550	550	550							
21	630	759	825	825	825	825	825	702	825	825	825	825	825	825	825	825	825	825	825	825	825
	364	426	460	460	460	460	460	453	520	520	520	520	520	520	550	550	550	550	550	550	550
22	573	690	777	825	825	825	825	639	771	825	825	825	825	825	825	825	825	825	825	825	825
	316	370	414	438	438	438	438	393	461	490	490	490	490	490	548	548	548	548	548	548	548
23	523	630	709	774	825	825	825	583	703	793	825	825	825	825	777	825	825	825	825	825	825
	276	323	362	393	418	418	418	344	402	451	468	468	468	468	491	518	518	518	518	518	518
24	480	577	651	709	789	825	825	535	645	727	792	825	825	825	712	804	825	825	825	825	825
	242	284	318	345	382	396	396	302	353	396	430	448	448	448	431	483	495	495	495	495	495
25	441	532	600	652	727	825	825	493	594	669	729	811	825	825	657	739	805	825	825	825	825
	214	250	281	305	337	377	377	266	312	350	380	421	426	426	381	427	464	474	474	474	474
26	408	492	553	603	672	807	825	456	549	618	673	750	825	825	606	682	744	825	825	825	825
	190	222	249	271	299	354	361	236	277	310	337	373	405	405	338	379	411	454	454	454	454
27	378	454	513	558	622	747	825	421	508	573	624	694	825	825	561	633	688	768	825	825	825
	169	198	222	241	267	315	347	211	247	277	301	333	389	389	301	337	367	406	432	432	432
28	351	423	477	519	577	694	822	391	472	532	579	645	775	825	522	588	640	712	825	825	825
	151	177	199	216	239	282	331	189	221	248	269	298	353	375	270	302	328	364	413	413	413
29	327	394	444	483	538	646	766	364	439	495	540	601	723	825	486	547	597	664	798	825	825
	136	159	179	194	215	254	298	170	199	223	242	268	317	359	242	272	295	327	387	399	399
30	304	367	414	451	502	603	715	340	411	462	504	561	675	799	453	511	556	619	745	825	825
	123	144	161	175	194	229	269	153	179	201	218	242	286	336	219	245	266	295	349	385	385
31	285	343	387	421	469	564	669	318	384	433	471	525	631	748	424	478	520	580	697	825	825
	111	130	146	158	175	207	243	138	162	182	198	219	259	304	198	222	241	267	316	369	369
32	267	322	363	396	441	529	627	298	360	406	442	492	592	702	397	448	489	544	654	775	823
	101	118	132	144	159	188	221	126	147	165	179	199	235	276	180	201	219	242	287	337	355
33	252	303	342	372	414	498	589	280	339	381	415	463	556	660	373	421	459	511	615	729	798
	92	108	121	131	145	171	201	114	134	150	163	181	214	251	164	183	199	221	261	307	334
34	237	285	321	349	390	468	555	264	318	358	391	435	523	621	352	397	432	481	579	687	774
	84	98	110	120	132	156	184	105	122	137	149	165	195	229	149	167	182	202	239	280	314
35	223	268	303	330	367	441	523	249	300	339	369	411	493	585	331	373	408	454	546	648	741
	77	90	101	110	121	143	168	96	112	126	137	151	179	210	137	153	167	185	219	257	292
36	211	253	286	312	348	417	495	235	283	319	348	388	466	553	313	354	385	429	516	612	700
	70	82	92	101	111	132	154	88	103	115	125	139	164	193	126	141	153	169	201	236	269
37								222	268	303	330	367	441	523	297	334	364	406	487	579	663
								81	95	106	115	128	151	178	116	130	141	156	185	217	247
38								211	255	286	312	348	418	496	280	316	345	384	462	549	628
								74	87	98	106	118	139	164	107	119	130	144	170	200	228
39								199	241	271	297	330	397	471	267	300	327	364	438	520	595
								69	81	90	98	109	129	151	98	110	120	133	157	185	211
40								190	229	258	282	313	376	447	253	285	310	346	417	495	565
								64	75	84	91	101	119	140	91	102	111	123	146	171	195
41															241	271	295	330	396	471	538
															85	95	103	114	135	159	181
42															229	259	282	313	378	448	513
															79	88	96	106	126	148	168
43															219	247	268	300	360	427	489
															73	82	89	99	117	138	157
44															208	235	256	286	343	408	466
															68	76	83	92	109	128	146

LRFD

STANDARD LOAD TABLE FOR OPEN WEB STEEL JOISTS, K-SERIES
Based On A 50 ksi Maximum Yield Strength - Loads Shown In Pounds Per Linear Foot (plf)

Joist Designation	24K4	24K5	24K6	24K7	24K8	24K9	24K10	24K12	26K5	26K6	26K7	26K8	26K9	26K10	26K12
Depth (In.)	24	24	24	24	24	24	24	24	26	26	26	26	26	26	26
Approx. Wt. (lbs./ft.)	7.8	7.9	8.5	9.0	9.4	10.3	11.7	13.5	8.1	8.6	9.0	9.7	10.4	11.8	13.7
Span (ft.) ↓															
23	825 550	825 550	825 550	825 550	825 550	825 550	825 550	825 550							
24	780 516	825 544	825 544	825 544	825 544	825 544	825 544	825 544							
25	718 456	810 511	825 520	825 520	825 520	825 520	825 520	825 520	825 550	825 550	825 550	825 550	825 550	825 550	825 550
26	663 405	748 453	814 493	825 499	825 499	825 499	825 499	825 499	813 535	825 541	825 541	825 541	825 541	825 541	825 541
27	615 361	693 404	754 439	825 479	825 479	825 479	825 479	825 479	753 477	820 519	825 522	825 522	825 522	825 522	825 522
28	571 323	643 362	700 393	781 436	825 456	825 456	825 456	825 456	699 427	762 464	825 501	825 501	825 501	825 501	825 501
29	531 290	600 325	652 354	727 392	804 429	825 436	825 436	825 436	651 384	709 417	790 463	825 479	825 479	825 479	825 479
30	496 262	559 293	609 319	679 353	750 387	816 419	825 422	825 422	607 346	661 377	738 417	816 457	825 459	825 459	825 459
31	465 237	523 266	570 289	636 320	702 350	765 379	825 410	825 410	568 314	619 341	690 378	763 413	825 444	825 444	825 444
32	435 215	490 241	535 262	595 290	658 318	717 344	823 393	823 393	534 285	580 309	648 343	715 375	778 407	823 431	823 431
33	409 196	462 220	502 239	559 265	619 289	673 313	798 368	798 368	501 259	546 282	609 312	672 342	732 370	798 404	798 404
34	385 179	435 201	472 218	526 242	582 264	634 286	753 337	774 344	472 237	514 257	573 285	633 312	688 338	774 378	774 378
35	363 164	409 184	445 200	496 221	549 242	598 262	709 308	751 324	445 217	484 236	540 261	597 286	649 310	751 356	751 356
36	343 150	387 169	421 183	469 203	519 222	565 241	670 283	730 306	420 199	457 216	510 240	564 263	613 284	729 334	730 334
37	324 138	366 155	399 169	444 187	490 205	534 222	634 260	711 290	397 183	433 199	483 221	534 242	580 262	690 308	711 315
38	307 128	346 143	378 156	421 172	465 189	507 204	601 240	691 275	376 169	411 184	457 204	505 223	550 241	654 284	691 299
39	292 118	328 132	358 144	399 159	441 174	480 189	570 222	673 261	357 156	390 170	433 188	480 206	522 223	619 262	673 283
40	277 109	312 122	340 133	379 148	420 161	456 175	541 206	657 247	340 145	370 157	412 174	456 191	496 207	589 243	657 269
41	264 101	297 114	324 124	361 137	399 150	435 162	516 191	640 235	322 134	352 146	393 162	433 177	472 192	561 225	640 256
42	252 94	283 106	309 115	343 127	379 139	414 151	490 177	625 224	307 125	336 136	373 150	412 164	450 178	534 210	625 244
43	240 88	270 98	294 107	328 118	363 130	394 140	468 165	609 213	294 116	319 126	357 140	394 153	429 166	508 195	610 232
44	229 82	258 92	280 100	313 110	346 121	376 131	447 154	580 199	280 108	306 118	340 131	376 143	409 155	486 182	597 222
45	219 76	246 86	268 93	298 103	330 113	360 122	427 144	555 185	268 101	291 110	325 122	360 133	391 145	465 170	583 212
46	208 71	235 80	256 87	286 97	316 106	345 114	408 135	531 174	256 95	279 103	310 114	343 125	375 135	444 159	570 203
47	199 67	225 75	246 82	274 90	303 99	330 107	391 126	508 163	246 89	267 96	298 107	328 117	358 127	426 149	553 192
48	192 63	216 70	235 77	262 85	291 93	316 101	375 118	487 153	235 83	256 90	285 100	315 110	343 119	408 140	529 180
49									225 78	246 85	274 94	303 103	330 112	391 131	508 169
50									216 73	235 80	262 89	291 97	316 105	375 124	487 159
51									208 69	226 75	252 83	279 91	304 99	361 116	469 150
52									199 65	217 71	243 79	268 86	292 93	346 110	451 142

LRFD

STANDARD LOAD TABLE/OPEN WEB STEEL JOISTS, K-SERIES
Based On A 50 ksi Maximum Yield Strength - Loads Shown In Pounds Per Linear Foot (plf)

Joist Designation	28K6	28K7	28K8	28K9	28K10	28K12	30K7	30K8	30K9	30K10	30K11	30K12
Depth (In.)	28	28	28	28	28	28	30	30	30	30	30	30
Approx. Wt. (lbs./ft.)	8.9	9.2	9.8	10.5	11.8	14.5	9.6	10.0	10.6	11.9	13.3	15.0
Span (ft.) ↓												
27	825 550	825 550	825 550	825 550	825 550	825 550						
28	822 541	825 543	825 543	825 543	825 543	825 543						
29	766 486	825 522	825 522	825 522	825 522	825 522	825 550	825 550	825 550	825 550	825 550	825 550
30	715 439	796 486	825 500	825 500	825 500	825 500	825 543	825 543	825 543	825 543	825 543	825 543
31	669 397	745 440	825 480	825 480	825 480	825 480	801 508	825 520	825 520	825 520	825 520	825 520
32	627 361	699 400	772 438	823 463	823 463	823 463	751 461	823 500	823 500	823 500	823 500	823 500
33	589 329	657 364	726 399	790 432	798 435	798 435	706 420	780 460	798 468	798 468	798 468	798 468
34	555 300	618 333	684 364	744 395	774 410	774 410	664 384	735 420	774 441	774 441	774 441	774 441
35	523 275	583 305	645 333	702 361	751 389	751 389	627 351	693 384	751 415	751 415	751 415	751 415
36	495 252	550 280	609 306	663 332	730 366	730 366	592 323	654 353	712 383	730 392	730 392	730 392
37	468 232	522 257	576 282	627 305	711 344	711 344	559 297	619 325	673 352	711 374	711 374	711 374
38	444 214	493 237	546 260	594 282	691 325	691 325	531 274	586 300	639 325	691 353	691 353	691 353
39	420 198	469 219	519 240	564 260	670 306	673 308	504 253	556 277	606 300	673 333	673 333	673 333
40	399 183	445 203	492 222	535 241	636 284	657 291	478 234	529 256	576 278	657 315	657 315	657 315
41	379 170	424 189	468 206	510 224	606 263	640 277	454 217	502 238	547 258	640 300	640 300	640 300
42	361 158	403 175	445 192	486 208	576 245	625 264	433 202	480 221	522 240	619 282	625 284	625 284
43	345 147	385 163	426 179	463 194	550 228	610 252	414 188	457 206	498 223	591 263	610 270	610 270
44	330 137	367 152	406 167	442 181	525 212	597 240	394 176	436 192	475 208	564 245	597 258	597 258
45	315 128	351 142	388 156	423 169	501 198	583 229	376 164	417 179	454 195	538 229	583 246	583 246
46	301 120	336 133	372 146	405 158	480 186	570 219	361 153	399 168	435 182	516 214	570 236	570 236
47	288 112	321 125	355 136	387 148	459 174	558 210	345 144	382 157	415 171	493 201	558 226	558 226
48	276 105	309 117	340 128	370 139	441 163	547 201	331 135	366 148	399 160	472 188	543 215	547 216
49	265 99	295 110	327 120	355 130	423 153	535 193	318 127	351 139	382 150	454 177	520 202	535 207
50	255 93	283 103	313 113	342 123	405 144	525 185	304 119	337 130	367 141	436 166	499 190	525 199
51	244 88	273 97	301 106	328 115	390 136	507 175	292 112	324 123	352 133	418 157	480 179	514 192
52	235 83	262 92	289 100	315 109	375 128	487 165	282 106	312 116	339 126	402 148	462 169	504 184
53	226 78	252 87	279 95	304 103	360 121	469 156	271 100	300 109	327 119	387 140	444 159	495 177
54	217 74	243 82	268 89	292 97	348 114	451 147	261 94	288 103	313 112	373 132	427 150	486 170
55	210 70	234 77	259 85	282 92	334 108	435 139	252 89	277 98	303 106	360 125	412 142	468 161
56	202 66	226 73	249 80	271 87	322 102	420 132	243 84	268 92	292 100	346 118	397 135	451 153
57							234 80	259 88	282 95	334 112	384 128	435 145
58							226 76	250 83	271 90	322 106	370 121	420 137
59							219 72	241 79	262 86	312 101	358 115	406 130
60							211 69	234 75	253 81	301 96	346 109	393 124

LRFD

METRIC LOAD TABLE FOR OPEN WEB STEEL JOISTS, K-SERIES
Based On A 345 MPa Maximum Yield Strength - Loads Shown In Kilonewtons Per Meter (kN/m)

Joist Designation	10K1	12K1	12K3	12K5	14K1	14K3	14K4	14K6	16K2	16K3	16K4	16K5	16K6	16K7	16K9
Depth (mm)	254	305	305	305	356	356	356	356	406	406	406	406	406	406	406
Approx. Wt (kN/m)	0.07	0.07	0.08	0.10	0.08	0.09	0.10	0.11	0.08	0.09	0.10	0.11	0.12	0.13	0.15
Span (mm) ↓															
3048	12.03 8.02														
3353	12.03 7.90														
3658	12.03 6.64	12.03 8.02	12.03 8.02	12.03 8.02											
3962	10.48 5.29	12.03 7.44	12.03 7.44	12.03 7.44											
4267	9.01 4.21	10.94 6.20	12.03 6.75	12.03 6.75	12.03 8.02	12.03 8.02	12.03 8.02	12.03 8.02							
4572	7.83 3.41	9.50 5.02	11.88 6.24	12.03 6.33	11.18 6.93	12.03 7.39	12.03 7.39	12.03 7.39							
4877	6.85 2.80	8.31 4.11	10.42 5.12	12.03 5.77	9.80 5.69	12.03 6.81	12.03 6.81	12.03 6.81	12.03 8.02	12.03 8.02	12.03 8.02	12.03 8.02	12.03 8.02	12.03 8.02	12.03 8.02
5182	6.06 2.32	7.35 3.41	9.19 4.24	12.03 5.34	8.64 4.72	10.83 5.89	12.03 6.46	12.03 6.46	11.20 7.12	12.03 7.67	12.03 7.67	12.03 7.67	12.03 7.67	12.03 7.67	12.03 7.67
5486	5.38 1.95	6.54 2.87	8.18 3.57	11.09 4.62	7.70 3.96	9.65 4.94	11.60 5.79	12.03 5.95	9.98 5.96	11.12 6.65	12.03 7.15	12.03 7.15	12.03 7.15	12.03 7.15	12.03 7.15
5791	4.83 1.64	5.86 2.43	7.33 3.02	9.93 3.92	6.89 3.35	8.64 4.18	10.39 4.90	12.03 5.58	8.93 5.06	9.96 5.63	11.97 6.59	12.03 6.64	12.03 6.64	12.03 6.64	12.03 6.64
6096	4.35 1.41	5.27 2.07	6.61 2.58	8.95 3.35	6.21 2.87	7.79 3.59	9.36 4.18	11.49 5.06	8.05 4.33	8.97 4.81	10.79 5.63	12.03 6.21	12.03 6.21	12.03 6.21	12.03 6.21
6401		4.77 1.79	5.97 2.23	8.09 2.88	5.62 2.48	7.04 3.09	8.49 3.61	10.39 4.36	7.28 3.72	8.12 4.15	9.78 4.85	11.01 5.44	11.99 5.91	12.03 5.92	12.03 5.92
6706		4.35 1.54	5.45 1.92	7.37 2.51	5.12 2.14	6.41 2.68	7.72 3.13	9.45 3.77	6.63 3.23	7.37 3.60	8.88 4.21	10.02 4.71	10.90 5.12	12.03 5.61	12.03 5.61
7010		3.96 1.35	4.96 1.69	6.74 2.18	4.68 1.86	5.86 2.33	7.04 2.74	8.64 3.29	6.06 2.83	6.74 3.15	8.12 3.67	9.15 4.11	9.96 4.48	11.09 4.94	12.03 5.29
7315		3.63 1.18	4.55 1.47	6.17 1.92	4.29 1.64	5.36 2.05	6.45 2.40	7.92 2.90	5.56 2.48	6.19 2.75	7.44 3.22	8.40 3.61	9.15 3.92	10.17 4.34	12.03 5.04
7620					3.94 1.45	4.94 1.80	5.95 2.11	7.31 2.55	5.12 2.18	5.69 2.43	6.85 2.84	7.72 3.19	8.40 3.47	9.36 3.83	11.25 4.53
7925					3.63 1.28	4.57 1.60	5.49 1.88	6.74 2.27	4.72 1.94	5.25 2.15	6.32 2.52	7.13 2.83	7.77 3.07	8.64 3.40	10.37 4.02
8230					3.37 1.15	4.22 1.43	5.10 1.67	6.23 2.02	4.37 1.73	4.88 1.92	5.86 2.26	6.61 2.52	7.20 2.74	8.01 3.03	9.61 3.59
8534					3.13 1.02	3.94 1.28	4.72 1.50	5.80 1.80	4.07 1.54	4.53 1.72	5.45 2.01	6.15 2.26	6.69 2.45	7.44 2.71	8.93 3.21
8839									3.78 1.38	4.22 1.54	5.07 1.80	5.71 2.02	6.23 2.20	6.93 2.43	8.31 2.88
9144									3.52 1.25	3.94 1.40	4.72 1.63	5.34 1.83	5.82 1.99	6.47 2.20	7.77 2.59
9449									3.30 1.13	3.67 1.26	4.44 1.47	4.99 1.66	5.45 1.80	6.06 1.99	7.26 2.34
9754									3.10 1.03	3.45 1.15	4.15 1.34	4.68 1.50	5.10 1.63	5.66 1.80	6.80 2.14

LRFD

METRIC LOAD TABLE FOR OPEN WEB STEEL JOISTS, K-SERIES
Based On A 345 MPa Maximum Yield Strength - Loads Shown In Kilonewtons Per Meter (kN/m)

Joist Designation	18K3	18K4	18K5	18K6	18K7	18K9	18K10	20K3	20K4	20K5	20K6	20K7	20K9	20K10	22K4	22K5	22K6	22K7	22K9	22K10	22K11
Depth (mm)	457	457	457	457	457	457	457	508	508	508	508	508	508	508	559	559	559	559	559	559	559
Approx. Wt. (kN/m)	0.09	0.11	0.11	0.12	0.13	0.15	0.17	0.09	0.11	0.11	0.12	0.13	0.15	0.17	0.11	0.11	0.12	0.13	0.15	0.17	0.17
Span (mm) ↓																					
5486	12.03	12.03	12.03	12.03	12.03	12.03	12.03														
	8.02	8.02	8.02	8.02	8.02	8.02	8.02														
5791	11.25	12.03	12.03	12.03	12.03	12.03	12.03	12.03	12.03	12.03	12.03	12.03	12.03	12.03							
	7.20	7.63	7.63	7.63	7.63	7.63	7.63	8.02	8.02	8.02	8.02	8.02	8.02	8.02							
6096	10.13	12.03	12.03	12.03	12.03	12.03	12.03	11.31	12.03	12.03	12.03	12.03	12.03	12.03							
	6.17	7.15	7.15	7.15	7.15	7.15	7.15	7.54	8.02	8.02	8.02	8.02	8.02	8.02							
6401	9.19	11.07	12.03	12.03	12.03	12.03	12.03	10.24	12.03	12.03	12.03	12.03	12.03	12.03	12.03	12.03	12.03	12.03	12.03	12.03	12.03
	5.31	6.21	6.71	6.71	6.71	6.71	6.71	6.61	7.58	7.58	7.58	7.58	7.58	7.58	8.02	8.02	8.02	8.02	8.02	8.02	8.02
6706	8.36	10.06	11.33	12.03	12.03	12.03	12.03	9.32	11.25	12.03	12.03	12.03	12.03	12.03	12.03	12.03	12.03	12.03	12.03	12.03	12.03
	4.61	5.39	6.04	6.39	6.39	6.39	6.39	5.73	6.72	7.15	7.15	7.15	7.15	7.15	7.99	7.99	7.99	7.99	7.99	7.99	7.99
7010	7.63	9.19	10.35	11.29	12.03	12.03	12.03	8.51	10.26	11.58	12.03	12.03	12.03	12.03	11.33	12.03	12.03	12.03	12.03	12.03	12.03
	4.02	4.71	5.28	5.73	6.10	6.10	6.10	5.02	5.86	6.58	6.82	6.82	6.82	6.82	7.16	7.55	7.55	7.55	7.55	7.55	7.55
7315	7.00	8.42	9.50	10.35	11.51	12.03	12.03	7.81	9.41	10.61	11.55	12.03	12.03	12.03	10.39	11.73	12.03	12.03	12.03	12.03	12.03
	3.53	4.14	4.64	5.03	5.57	5.77	5.77	4.40	5.15	5.77	6.27	6.53	6.53	6.53	6.28	7.04	7.22	7.22	7.22	7.22	7.22
7620	6.43	7.77	8.75	9.52	10.61	12.03	12.03	7.20	8.66	9.76	10.63	11.84	12.03	12.03	9.58	10.79	11.75	12.03	12.03	12.03	12.03
	3.12	3.64	4.10	4.45	4.91	5.50	5.50	3.88	4.55	5.10	5.54	6.14	6.21	6.21	5.56	6.23	6.77	6.91	6.91	6.91	6.91
7925	5.95	7.18	8.07	8.80	9.80	11.77	12.03	6.65	8.01	9.01	9.82	10.94	12.03	12.03	8.84	9.96	10.85	12.03	12.03	12.03	12.03
	2.77	3.23	3.63	3.95	4.36	5.16	5.26	3.44	4.04	4.52	4.91	5.44	5.91	5.91	4.93	5.53	5.99	6.62	6.62	6.62	6.62
8230	5.51	6.63	7.48	8.14	9.08	10.90	12.03	6.15	7.42	8.36	9.10	10.13	12.03	12.03	8.18	9.23	10.04	11.20	12.03	12.03	12.03
	2.46	2.88	3.23	3.51	3.89	4.59	5.06	3.07	3.60	4.04	4.39	4.85	5.67	5.67	4.39	4.91	5.35	5.92	6.30	6.30	6.30
8534	5.12	6.17	6.96	7.57	8.42	10.13	11.99	5.71	6.89	7.77	8.44	9.41	11.31	12.03	7.61	8.58	9.34	10.39	12.03	12.03	12.03
	2.20	2.58	2.90	3.15	3.48	4.11	4.83	2.75	3.22	3.61	3.92	4.34	5.15	5.47	3.94	4.40	4.78	5.31	6.02	6.02	6.02
8839	4.77	5.75	6.47	7.04	7.85	9.43	11.18	5.31	6.41	7.22	7.88	8.77	10.55	12.03	7.09	7.99	8.71	9.69	11.64	12.03	12.03
	1.98	2.32	2.61	2.83	3.13	3.70	4.34	2.48	2.90	3.25	3.53	3.91	4.62	5.23	3.53	3.96	4.30	4.77	5.64	5.82	5.82
9144	4.44	5.36	6.04	6.58	7.33	8.80	10.44	4.96	5.99	6.74	7.35	8.18	9.85	11.66	6.61	7.46	8.12	9.04	10.87	12.03	12.03
	1.79	2.10	2.34	2.55	2.83	3.34	3.92	2.23	2.61	2.93	3.18	3.53	4.17	4.90	3.19	3.57	3.88	4.30	5.09	5.61	5.61
9449	4.15	5.01	5.64	6.15	6.85	8.23	9.76	4.64	5.60	6.32	6.87	7.66	9.21	10.92	6.19	6.98	7.59	8.47	10.17	12.03	12.03
	1.61	1.89	2.13	2.30	2.55	3.02	3.54	2.01	2.36	2.65	2.88	3.19	3.77	4.43	2.88	3.23	3.51	3.89	4.61	5.38	5.38
9754	3.89	4.70	5.29	5.77	6.43	7.72	9.15	4.35	5.25	5.93	6.45	7.18	8.64	10.24	5.80	6.54	7.13	7.94	9.54	11.31	12.01
	1.47	1.72	1.92	2.10	2.32	2.74	3.22	1.83	2.14	2.40	2.61	2.90	3.42	4.02	2.62	2.93	3.19	3.53	4.18	4.91	5.18
10058	3.67	4.42	4.99	5.42	6.04	7.26	8.60	4.09	4.94	5.56	6.06	6.76	8.12	9.63	5.45	6.15	6.69	7.46	8.97	10.63	11.64
	1.34	1.57	1.76	1.91	2.11	2.49	2.93	1.66	1.95	2.18	2.37	2.64	3.12	3.66	2.39	2.67	2.90	3.22	3.80	4.48	4.87
10363	3.45	4.15	4.68	5.10	5.69	6.82	8.09	3.85	4.64	5.23	5.71	6.34	7.63	9.06	5.14	5.80	6.30	7.02	8.44	10.02	11.29
	1.22	1.43	1.60	1.75	1.92	2.27	2.68	1.53	1.78	1.99	2.17	2.40	2.84	3.34	2.17	2.43	2.65	2.94	3.48	4.08	4.58
10668	3.26	3.91	4.42	4.81	5.36	6.43	7.63	3.63	4.37	4.94	5.38	5.99	7.20	8.53	4.83	5.45	5.95	6.63	7.96	9.45	10.81
	1.12	1.31	1.47	1.60	1.76	2.08	2.45	1.40	1.63	1.83	1.99	2.20	2.61	3.06	1.99	2.23	2.43	2.69	3.19	3.75	4.26
10973	3.08	3.69	4.18	4.55	5.07	6.08	7.22	3.43	4.13	4.66	5.07	5.66	6.80	8.07	4.57	5.16	5.62	6.26	7.53	8.93	10.22
	1.02	1.19	1.34	1.47	1.61	1.92	2.24	1.28	1.50	1.67	1.82	2.02	2.39	2.81	1.83	2.05	2.23	2.46	2.93	3.44	3.92
11278								3.23	3.91	4.42	4.81	5.36	6.43	7.63	4.33	4.88	5.31	5.93	7.11	8.44	9.67
								1.18	1.38	1.54	1.67	1.86	2.20	2.59	1.69	1.89	2.05	2.27	2.69	3.16	3.60
11582								3.08	3.72	4.18	4.55	5.07	6.10	7.24	4.09	4.61	5.03	5.60	6.74	8.01	9.17
								1.07	1.26	1.43	1.54	1.72	2.02	2.39	1.56	1.73	1.89	2.10	2.48	2.91	3.32
11887								2.91	3.52	3.96	4.33	4.81	5.80	6.87	3.89	4.37	4.77	5.31	6.39	7.59	8.69
								1.00	1.18	1.31	1.43	1.59	1.88	2.20	1.43	1.60	1.75	1.94	2.29	2.69	3.07
12192								2.78	3.34	3.76	4.11	4.57	5.49	6.52	3.69	4.15	4.53	5.05	6.08	7.22	8.25
								0.93	1.09	1.22	1.32	1.47	1.73	2.04	1.32	1.48	1.61	1.79	2.13	2.49	2.84
12497															3.52	3.96	4.31	4.81	5.77	6.87	7.85
															1.24	1.38	1.50	1.66	1.97	2.32	2.64
12802															3.34	3.78	4.11	4.57	5.51	6.54	7.48
															1.15	1.28	1.40	1.54	1.83	2.15	2.45
13106															3.19	3.61	3.91	4.37	5.25	6.23	7.13
															1.06	1.19	1.29	1.44	1.70	2.01	2.29
13411															3.04	3.43	3.74	4.18	5.01	5.95	6.80
															0.99	1.10	1.21	1.34	1.59	1.86	2.13

LRFD

METRIC LOAD TABLE FOR OPEN WEB STEEL JOISTS, K-SERIES
Based On A 345 MPa Maximum Yield Strength - Loads Shown In Kilonewtons Per Meter (kN/m)

Joist Designation	24K4	24K5	24K6	24K7	24K8	24K9	24K10	24K12	26K5	26K6	26K7	26K8	26K9	26K10	26K12
Depth (mm)	610	610	610	610	610	610	610	610	660	660	660	660	660	660	660
Approx. Wt. (kN/m)	0.11	0.12	0.12	0.13	0.14	0.15	0.17	0.20	0.12	0.13	0.13	0.14	0.15	0.17	0.20
Span (mm) ↓															
7010	12.03	12.03	12.03	12.03	12.03	12.03	12.03	12.03							
	8.02	8.02	8.02	8.02	8.02	8.02	8.02	8.02							
7315	11.38	12.03	12.03	12.03	12.03	12.03	12.03	12.03							
	7.53	7.93	7.93	7.93	7.93	7.93	7.93	7.93							
7620	10.48	11.82	12.03	12.03	12.03	12.03	12.03	12.03	12.03	12.03	12.03	12.03	12.03	12.03	12.03
	6.65	7.45	7.58	7.58	7.58	7.58	7.58	7.58	8.02	8.02	8.02	8.02	8.02	8.02	8.02
7925	9.67	10.92	11.88	12.03	12.03	12.03	12.03	12.03	11.86	12.03	12.03	12.03	12.03	12.03	12.03
	5.91	6.61	7.19	7.28	7.28	7.28	7.28	7.28	7.80	7.89	7.89	7.89	7.89	7.89	7.89
8230	8.97	10.11	11.01	12.03	12.03	12.03	12.03	12.03	10.98	11.97	12.03	12.03	12.03	12.03	12.03
	5.26	5.89	6.40	6.99	6.99	6.99	6.99	6.99	6.96	7.57	7.61	7.61	7.61	7.61	7.61
8534	8.34	9.39	10.22	11.40	12.03	12.03	12.03	12.03	10.20	11.12	12.03	12.03	12.03	12.03	12.03
	4.71	5.28	5.73	6.36	6.65	6.65	6.65	6.65	6.23	6.77	7.31	7.31	7.31	7.31	7.31
8839	7.74	8.75	9.52	10.61	11.73	12.03	12.03	12.03	9.50	10.35	11.53	12.03	12.03	12.03	12.03
	4.23	4.74	5.16	5.72	6.26	6.36	6.36	6.36	5.60	6.08	6.75	6.99	6.99	6.99	6.99
9144	7.24	8.16	8.88	9.91	10.94	11.90	12.03	12.03	8.86	9.65	10.77	11.90	12.03	12.03	12.03
	3.82	4.27	4.65	5.15	5.64	6.11	6.15	6.15	5.04	5.50	6.08	6.66	6.69	6.69	6.69
9449	6.78	7.63	8.31	9.28	10.24	11.16	12.03	12.03	8.29	9.04	10.06	11.14	12.03	12.03	12.03
	3.45	3.88	4.21	4.67	5.10	5.53	5.98	5.98	4.58	4.97	5.51	6.02	6.47	6.47	6.47
9754	6.34	7.15	7.81	8.69	9.61	10.46	12.01	12.01	7.79	8.47	9.45	10.44	11.36	12.01	12.01
	3.13	3.51	3.82	4.23	4.64	5.02	5.73	5.73	4.15	4.50	5.00	5.47	5.93	6.28	6.28
10058	5.97	6.74	7.33	8.16	9.04	9.82	11.64	11.64	7.31	7.96	8.88	9.80	10.68	11.64	11.64
	2.86	3.21	3.48	3.86	4.21	4.56	5.37	5.37	3.77	4.11	4.55	4.99	5.39	5.89	5.89
10363	5.62	6.34	6.89	7.68	8.49	9.25	10.98	11.29	6.89	7.50	8.36	9.23	10.04	11.29	11.29
	2.61	2.93	3.18	3.53	3.85	4.17	4.91	5.02	3.45	3.75	4.15	4.55	4.93	5.51	5.51
10668	5.29	5.97	6.50	7.24	8.01	8.73	10.35	10.96	6.50	7.07	7.88	8.71	9.47	10.96	10.96
	2.39	2.68	2.91	3.22	3.53	3.82	4.49	4.72	3.16	3.44	3.80	4.17	4.52	5.19	5.19
10973	5.01	5.64	6.15	6.85	7.57	8.25	9.78	10.66	6.12	6.67	7.44	8.23	8.95	10.63	10.66
	2.18	2.46	2.67	2.96	3.23	3.51	4.13	4.46	2.90	3.15	3.50	3.83	4.14	4.87	4.87
11278	4.72	5.34	5.82	6.47	7.15	7.79	9.25	10.37	5.80	6.32	7.04	7.79	8.47	10.06	10.37
	2.01	2.26	2.46	2.72	2.99	3.23	3.79	4.23	2.67	2.90	3.22	3.53	3.82	4.49	4.59
11582	4.48	5.05	5.51	6.15	6.78	7.39	8.77	10.09	5.49	5.99	6.67	7.37	8.03	9.54	10.09
	1.86	2.08	2.27	2.51	2.75	2.97	3.50	4.01	2.46	2.68	2.97	3.25	3.51	4.14	4.36
11887	4.26	4.79	5.23	5.82	6.43	7.00	8.31	9.82	5.21	5.69	6.32	7.00	7.61	9.04	9.82
	1.72	1.92	2.10	2.32	2.53	2.75	3.23	3.80	2.27	2.48	2.74	3.00	3.25	3.82	4.13
12192	4.04	4.55	4.96	5.53	6.12	6.65	7.90	9.58	4.96	5.40	6.01	6.65	7.24	8.60	9.58
	1.59	1.78	1.94	2.15	2.34	2.55	3.00	3.60	2.11	2.29	2.53	2.78	3.02	3.54	3.92
12497	3.85	4.33	4.72	5.27	5.82	6.34	7.53	9.34	4.70	5.14	5.73	6.32	6.89	8.18	9.34
	1.47	1.66	1.80	1.99	2.18	2.36	2.78	3.42	1.95	2.13	2.36	2.58	2.80	3.28	3.73
12802	3.67	4.13	4.50	5.01	5.53	6.04	7.15	9.12	4.48	4.90	5.45	6.01	6.56	7.79	9.12
	1.37	1.54	1.67	1.85	2.02	2.20	2.58	3.26	1.82	1.98	2.18	2.39	2.59	3.06	3.56
13106	3.50	3.94	4.29	4.79	5.29	5.75	6.82	8.88	4.29	4.66	5.21	5.75	6.26	7.42	8.90
	1.28	1.43	1.56	1.72	1.89	2.04	2.40	3.10	1.69	1.83	2.04	2.23	2.42	2.84	3.38
13411	3.34	3.76	4.09	4.57	5.05	5.49	6.52	8.47	4.09	4.46	4.96	5.49	5.97	7.09	8.71
	1.19	1.34	1.45	1.60	1.76	1.91	2.24	2.90	1.57	1.72	1.91	2.08	2.26	2.65	3.23
13716	3.19	3.59	3.91	4.35	4.81	5.25	6.23	8.09	3.91	4.24	4.75	5.25	5.71	6.78	8.51
	1.10	1.25	1.35	1.50	1.64	1.78	2.10	2.69	1.47	1.60	1.78	1.94	2.11	2.48	3.09
14021	3.04	3.43	3.74	4.18	4.61	5.03	5.95	7.74	3.74	4.07	4.53	5.01	5.47	6.47	8.31
	1.03	1.16	1.26	1.41	1.54	1.66	1.97	2.53	1.38	1.50	1.66	1.82	1.97	2.32	2.96
14326	2.91	3.28	3.59	4.00	4.42	4.81	5.71	7.42	3.59	3.89	4.35	4.79	5.23	6.21	8.07
	0.97	1.09	1.19	1.31	1.44	1.56	1.83	2.37	1.29	1.40	1.56	1.70	1.85	2.17	2.80
14630	2.80	3.15	3.43	3.83	4.24	4.61	5.47	7.11	3.43	3.74	4.15	4.59	5.01	5.95	7.72
	0.91	1.02	1.12	1.24	1.35	1.47	1.72	2.23	1.21	1.31	1.45	1.60	1.73	2.04	2.62
14935									3.28	3.59	4.00	4.42	4.81	5.71	7.42
									1.13	1.24	1.37	1.50	1.63	1.91	2.46
15240									3.15	3.43	3.83	4.24	4.61	5.47	7.11
									1.06	1.16	1.29	1.41	1.53	1.80	2.32
15545									3.04	3.30	3.67	4.07	4.44	5.27	6.85
									1.00	1.09	1.21	1.32	1.44	1.69	2.18
15850									2.91	3.17	3.54	3.91	4.26	5.05	6.58
									0.94	1.03	1.15	1.25	1.35	1.60	2.07

LRFD

METRIC LOAD TABLE FOR OPEN WEB STEEL JOISTS, K-SERIES
Based On A 345 MPa Maximum Yield Strength - Loads Shown In Kilonewtons Per Meter (kN/m)

Joist Designation	28K6	28K7	28K8	28K9	28K10	28K12	30K7	30K8	30K9	30K10	30K11	30K12
Depth (mm)	711	711	711	711	711	711	762	762	762	762	762	762
Approx. Wt. (kN/m)	0.13	0.13	0.14	0.15	0.17	0.21	0.14	0.15	0.15	0.17	0.19	0.22
Span (mm) ↓												
8230	12.03 8.02	12.03 8.02	12.03 8.02	12.03 8.02	12.03 8.02	12.03 8.02						
8534	11.99 7.89	12.03 7.92	12.03 7.92	12.03 7.92	12.03 7.92	12.03 7.92						
8839	11.18 7.09	12.03 7.61	12.03 7.61	12.03 7.61	12.03 7.61	12.03 7.61	12.03 8.02	12.03 8.02	12.03 8.02	12.03 8.02	12.03 8.02	12.03 8.02
9144	10.44 6.40	11.62 7.09	12.03 7.29	12.03 7.29	12.03 7.29	12.03 7.29	12.03 7.92	12.03 7.92	12.03 7.92	12.03 7.92	12.03 7.92	12.03 7.92
9449	9.76 5.79	10.87 6.42	12.03 7.00	12.03 7.00	12.03 7.00	12.03 7.00	11.68 7.41	12.03 7.58	12.03 7.58	12.03 7.58	12.03 7.58	12.03 7.58
9754	9.15 5.26	10.20 5.83	11.27 6.39	12.01 6.75	12.01 6.75	12.01 6.75	10.96 6.72	12.01 7.29	12.01 7.29	12.01 7.29	12.01 7.29	12.01 7.29
10058	8.60 4.80	9.58 5.31	10.59 5.82	11.53 6.30	11.64 6.34	11.64 6.34	10.31 6.12	11.38 6.71	11.64 6.82	11.64 6.82	11.64 6.82	11.64 6.82
10363	8.09 4.37	9.01 4.85	9.98 5.31	10.85 5.76	11.29 5.98	11.29 5.98	9.69 5.60	10.72 6.12	11.29 6.43	11.29 6.43	11.29 6.43	11.29 6.43
10668	7.63 4.01	8.51 4.45	9.41 4.85	10.24 5.26	10.96 5.67	10.96 5.67	9.15 5.12	10.11 5.60	10.96 6.05	10.96 6.05	10.96 6.05	10.96 6.05
10973	7.22 3.67	8.03 4.08	8.88 4.46	9.67 4.84	10.66 5.34	10.66 5.34	8.64 4.71	9.54 5.15	10.39 5.58	10.66 5.72	10.66 5.72	10.66 5.72
11278	6.82 3.38	7.61 3.75	8.40 4.11	9.15 4.45	10.37 5.02	10.37 5.02	8.16 4.33	9.04 4.74	9.82 5.13	10.37 5.45	10.37 5.45	10.37 5.45
11582	6.47 3.12	7.20 3.45	7.96 3.79	8.66 4.11	10.09 4.74	10.09 4.74	7.74 3.99	8.55 4.37	9.32 4.74	10.09 5.15	10.09 5.15	10.09 5.15
11887	6.12 2.88	6.85 3.19	7.57 3.50	8.23 3.79	9.78 4.46	9.82 4.49	7.35 3.69	8.12 4.04	8.84 4.37	9.82 4.85	9.82 4.85	9.82 4.85
12192	0.09 2.67	6.50 2.96	7.18 3.23	7.81 3.51	9.28 4.14	9.58 4.24	6.98 3.41	7.72 3.73	8.40 4.05	9.58 4.59	9.58 4.59	9.58 4.59
12497	5.53 2.48	6.19 2.75	6.82 3.00	7.44 3.26	8.84 3.83	9.34 4.04	6.63 3.16	7.33 3.47	7.99 3.76	9.34 4.37	9.34 4.37	9.34 4.37
12802	5.27 2.30	5.88 2.55	6.50 2.80	7.09 3.03	8.40 3.57	9.12 3.85	6.32 2.94	7.00 3.22	7.61 3.50	9.04 4.11	9.12 4.14	9.12 4.14
13106	5.03 2.14	5.62 2.37	6.21 2.61	6.76 2.83	8.03 3.32	8.90 3.67	6.04 2.74	6.67 3.00	7.26 3.25	8.62 3.83	8.90 3.94	8.90 3.94
13411	4.81 1.99	5.36 2.21	5.93 2.43	6.45 2.64	7.66 3.09	8.71 3.50	5.75 2.56	6.37 2.80	6.93 3.03	8.23 3.57	8.71 3.76	8.71 3.76
13716	4.59 1.86	5.12 2.07	5.66 2.27	6.17 2.46	7.31 2.88	8.51 3.34	5.49 2.39	6.08 2.61	6.63 2.84	7.85 3.34	8.51 3.59	8.51 3.59
14021	4.40 1.75	4.90 1.94	5.42 2.13	5.91 2.30	7.00 2.71	8.31 3.19	5.27 2.23	5.82 2.45	6.34 2.65	7.53 3.12	8.31 3.44	8.31 3.44
14326	4.20 1.63	4.68 1.82	5.18 1.98	5.64 2.15	6.69 2.53	8.14 3.06	5.03 2.10	5.58 2.29	6.06 2.49	7.20 2.93	8.14 3.29	8.14 3.29
14630	4.02 1.53	4.50 1.70	4.96 1.86	5.40 2.02	6.43 2.37	7.99 2.93	4.83 1.97	5.34 2.15	5.82 2.33	6.89 2.74	7.92 3.13	7.99 3.15
14935	3.87 1.44	4.31 1.60	4.77 1.75	5.18 1.89	6.17 2.23	7.81 2.81	4.64 1.85	5.12 2.02	5.58 2.18	6.63 2.58	7.59 2.94	7.81 3.02
15240	3.72 1.35	4.13 1.50	4.57 1.64	4.99 1.79	5.91 2.10	7.66 2.69	4.44 1.73	4.92 1.89	5.36 2.05	6.37 2.42	7.28 2.77	7.66 2.90
15545	3.56 1.28	3.98 1.41	4.40 1.54	4.79 1.67	5.69 1.98	7.39 2.55	4.26 1.63	4.72 1.79	5.14 1.94	6.10 2.29	7.00 2.61	7.50 2.80
15850	3.43 1.21	3.83 1.34	4.22 1.45	4.59 1.59	5.47 1.86	7.11 2.40	4.11 1.54	4.55 1.69	4.94 1.83	5.86 2.15	6.74 2.46	7.35 2.68
16154	3.30 1.13	3.67 1.26	4.07 1.38	4.44 1.50	5.25 1.76	6.85 2.27	3.96 1.45	4.37 1.59	4.77 1.73	5.64 2.04	6.47 2.32	7.22 2.58
16459	3.17 1.07	3.54 1.19	3.91 1.29	4.26 1.41	5.07 1.66	6.58 2.14	3.80 1.37	4.20 1.50	4.57 1.63	5.45 1.92	6.23 2.18	7.09 2.48
16764	3.06 1.02	3.41 1.12	3.78 1.24	4.11 1.34	4.88 1.57	6.34 2.02	3.67 1.29	4.04 1.43	4.42 1.54	5.25 1.82	6.01 2.07	6.82 2.34
17069	2.95 0.96	3.30 1.06	3.63 1.16	3.96 1.26	4.70 1.48	6.12 1.92	3.54 1.22	3.91 1.34	4.26 1.45	5.05 1.72	5.80 1.97	6.58 2.23
17374							3.41 1.16	3.78 1.28	4.11 1.38	4.88 1.63	5.60 1.86	6.34 2.11
17678							3.30 1.10	3.65 1.21	3.96 1.31	4.70 1.54	5.40 1.76	6.12 1.99
17983							3.19 1.05	3.52 1.15	3.83 1.25	4.55 1.47	5.23 1.67	5.93 1.89
18288							3.08 1.00	3.41 1.09	3.69 1.18	4.40 1.40	5.05 1.59	5.73 1.80

STANDARD ASD LOAD TABLE

OPEN WEB STEEL JOISTS, K-SERIES

Based on a 50 ksi (345 MPa) Maximum Yield Strength
Adopted by the Steel Joist Institute November 4, 1985
Revised to May 18, 2010 – Effective December 31, 2010

The **BLACK** figures in the Load Table give the TOTAL safe uniformly distributed load-carrying capacities, in pounds per linear foot (kiloNewtons per meter), of **ASD** K-Series Steel Joists.

The approximate joist weights, in pounds per linear foot (kiloNewtons per meter), given in the Load Table may be added to the other building weights to determine the DEAD load. In all cases the DEAD load, including the joist self-weight, must be deducted from the TOTAL load to determine the LIVE load. The approximate joist weights do not include accessories.

The **RED** figures in the Load Table represent the uniform load, in pounds per linear foot (kiloNewtons per meter), which will produce an approximate joist deflection of 1/360 of the span. This load can be linearly prorated to obtain the uniform load for supplementary deflection criteria (i.e. a uniform load which will produce a joist deflection of 1/240 of the span may be obtained by multiplying the **RED** figure by 360/240). In no case shall the prorated load exceed the TOTAL load-carrying capacity of the joist.

Where the joist span is in the **RED SHADED** area of the Load Table, the row of bridging nearest the mid span shall be diagonal bridging with bolted connections at chords and intersections. Hoisting cables shall not be released until this row of bolted diagonal bridging is completely installed. The **RED SHADED** area extends up through 60'–0" (18288 mm).

The approximate gross moment of inertia (not adjusted for shear deformation) of a standard joist listed in the Load Table may be determined as follows:

$I_j = 26.767(W)(L^3)(10^{-6})$ in^4 or $2.6953(W)(L^3)(10^{-5})$ mm^4, where W= **RED** figure in the Load Table, and
L = (span – 0.33) in feet or (span – 102) in millimeters

The TOTAL safe uniformly distributed load-carrying capacities, in pounds per linear foot (kiloNewtons per meter), of **ASD** K-Series Steel Joists shall not exceed 550 plf (8.02 kN/m) for spans shorter than what is explicitly shown in the Load Table. The maximum prorated RED load shall not exceed 550 plf (8.02 kN/m) (the TOTAL load-carrying capacity of the joist as given in the Standard **ASD** Load Table for Open Web Steel Joists, K-Series).

Loads for span increments not explicitly given in the Load Table may be determined using linear interpolation between the load values given in adjacent span columns.

For the proper handling of concentrated and/or varying loads, see Section 2.4 in the Code of Standard Practice for Steel Joist and Joist Girders.

ASD

STANDARD LOAD TABLE FOR OPEN WEB STEEL JOISTS, K-SERIES
Based on a 50 ksi Maximum Yield Strength - Loads Shown In Pounds Per Linear Foot (plf)

Joist Designation	10K1	12K1	12K3	12K5	14K1	14K3	14K4	14K6	16K2	16K3	16K4	16K5	16K6	16K7	16K9
Depth (in.)	10	12	12	12	14	14	14	14	16	16	16	16	16	16	16
Approx. Wt (lbs./ft.)	5.0	5.0	5.7	7.1	5.2	6.0	6.7	7.7	5.5	6.3	7.0	7.5	8.1	8.6	10.0
Span (ft.) ↓															
10	550 550														
11	550 542														
12	550 455	550 550	550 550	550 550											
13	479 363	550 510	550 510	550 510											
14	412 289	500 425	550 463	550 463	550 550	550 550	550 550	550 550							
15	358 234	434 344	543 428	550 434	511 475	550 507	550 507	550 507							
16	313 192	380 282	476 351	550 396	448 390	550 467	550 467	550 467	550 550	550 550	550 550	550 550	550 550	550 550	550 550
17	277 159	336 234	420 291	550 366	395 324	495 404	550 443	550 443	512 488	550 526	550 526	550 526	550 526	550 526	550 526
18	246 134	299 197	374 245	507 317	352 272	441 339	530 397	550 408	456 409	508 456	550 490	550 490	550 490	550 490	550 490
19	221 113	268 167	335 207	454 269	315 230	395 287	475 336	550 383	408 347	455 386	547 452	550 455	550 455	550 455	550 455
20	199 97	241 142	302 177	409 230	284 197	356 246	428 287	525 347	368 297	410 330	493 386	550 426	550 426	550 426	550 426
21		218 123	273 153	370 198	257 170	322 212	388 248	475 299	333 255	371 285	447 333	503 373	548 405	550 406	550 406
22		199 106	249 132	337 172	234 147	293 184	353 215	432 259	303 222	337 247	406 289	458 323	498 351	550 385	550 385
23		181 93	227 116	308 150	214 128	268 160	322 188	395 226	277 194	308 216	371 252	418 282	455 307	507 339	550 363
24		166 81	208 101	282 132	196 113	245 141	295 165	362 199	254 170	283 189	340 221	384 248	418 269	465 298	550 346
25					180 100	226 124	272 145	334 175	234 150	260 167	313 195	353 219	384 238	428 263	514 311
26					166 88	209 110	251 129	308 156	216 133	240 148	289 173	326 194	355 211	395 233	474 276
27					154 79	193 98	233 115	285 139	200 119	223 132	268 155	302 173	329 188	366 208	439 246
28					143 70	180 88	216 103	265 124	186 106	207 118	249 138	281 155	306 168	340 186	408 220
29									173 95	193 106	232 124	261 139	285 151	317 167	380 198
30									161 86	180 96	216 112	244 126	266 137	296 151	355 178
31									151 78	168 87	203 101	228 114	249 124	277 137	332 161
32									142 71	158 79	190 92	214 103	233 112	259 124	311 147

ASD

STANDARD LOAD TABLE FOR OPEN WEB STEEL JOISTS, K-SERIES
Based on a 50 ksi Maximum Yield Strength - Loads Shown In Pounds Per Linear Foot (plf)

Joist Designation	18K3	18K4	18K5	18K6	18K7	18K9	18K10	20K3	20K4	20K5	20K6	20K7	20K9	20K10	22K4	22K5	22K6	22K7	22K9	22K10	22K11
Depth (In.)	18	18	18	18	18	18	18	20	20	20	20	20	20	20	22	22	22	22	22	22	22
Approx. Wt. (lbs./ft.)	6.4	7.2	7.7	8.4	8.9	10.1	11.6	6.5	7.2	7.7	8.4	8.9	10.1	11.6	7.3	7.7	8.5	9.0	10.2	11.7	11.9
Span (ft.) ↓																					
18	550	550	550	550	550	550	550														
	550	550	550	550	550	550	550														
19	514	550	550	550	550	550	550	550	550	550	550	550	550	550							
	494	523	523	523	523	523	523	550	550	550	550	550	550	550							
20	463	550	550	550	550	550	550	517	550	550	550	550	550	550							
	423	490	490	490	490	490	490	517	550	550	550	550	550	550							
21	420	506	550	550	550	550	550	468	550	550	550	550	550	550	550	550	550	550	550	550	550
	364	426	460	460	460	460	460	453	520	520	520	520	520	520	550	550	550	550	550	550	550
22	382	460	518	550	550	550	550	426	514	550	550	550	550	550	550	550	550	550	550	550	550
	316	370	414	438	438	438	438	393	461	490	490	490	490	490	548	548	548	548	548	548	548
23	349	420	473	516	550	550	550	389	469	529	550	550	550	550	518	550	550	550	550	550	550
	276	323	362	393	418	418	418	344	402	451	468	468	468	468	491	518	518	518	518	518	518
24	320	385	434	473	526	550	550	357	430	485	528	550	550	550	475	536	550	550	550	550	550
	242	284	318	345	382	396	396	302	353	396	430	448	448	448	431	483	495	495	495	495	495
25	294	355	400	435	485	550	550	329	396	446	486	541	550	550	438	493	537	550	550	550	550
	214	250	281	305	337	377	377	266	312	350	380	421	426	426	381	427	464	474	474	474	474
26	272	328	369	402	448	538	550	304	366	412	449	500	550	550	404	455	496	550	550	550	550
	190	222	249	271	299	354	361	236	277	310	337	373	405	405	338	379	411	454	454	454	454
27	252	303	342	372	415	498	550	281	339	382	416	463	550	550	374	422	459	512	550	550	550
	169	198	222	241	267	315	347	211	247	277	301	333	389	389	301	337	367	406	432	432	432
28	234	282	318	346	385	463	548	261	315	355	386	430	517	550	348	392	427	475	550	550	550
	151	177	199	216	239	282	331	189	221	248	269	298	353	375	270	302	328	364	413	413	413
29	218	263	296	322	359	431	511	243	293	330	360	401	482	550	324	365	398	443	532	550	550
	136	159	179	194	215	254	298	170	199	223	242	268	317	359	242	272	295	327	387	399	399
30	203	245	276	301	335	402	477	227	274	308	336	374	450	533	302	341	371	413	497	550	550
	123	144	161	175	194	229	269	153	179	201	218	242	286	336	219	245	266	295	349	385	385
31	190	229	258	281	313	376	446	212	256	289	314	350	421	499	283	319	347	387	465	550	550
	111	130	146	158	175	207	243	138	162	182	198	219	259	304	198	222	241	267	316	369	369
32	178	215	242	264	294	353	418	199	240	271	295	328	395	468	265	299	326	363	436	517	549
	101	118	132	144	159	188	221	126	147	165	179	199	235	276	180	201	219	242	287	337	355
33	168	202	228	248	276	332	393	187	226	254	277	309	371	440	249	281	306	341	410	486	532
	92	108	121	131	145	171	201	114	134	150	163	181	214	251	164	183	199	221	261	307	334
34	158	190	214	233	260	312	370	176	212	239	261	290	349	414	235	265	288	321	386	458	516
	84	98	110	120	132	156	184	105	122	137	149	165	195	229	149	167	182	202	239	280	314
35	149	179	202	220	245	294	349	166	200	226	246	274	329	390	221	249	272	303	364	432	494
	77	90	101	110	121	143	168	96	112	126	137	151	179	210	137	153	167	185	219	257	292
36	141	169	191	208	232	278	330	157	189	213	232	259	311	369	209	236	257	286	344	408	467
	70	82	92	101	111	132	154	88	103	115	125	139	164	193	126	141	153	169	201	236	269
37								148	179	202	220	245	294	349	198	223	243	271	325	386	442
								81	95	106	115	128	151	178	116	130	141	156	185	217	247
38								141	170	191	208	232	279	331	187	211	230	256	308	366	419
								74	87	98	106	118	139	164	107	119	130	144	170	200	228
39								133	161	181	198	220	265	314	178	200	218	243	292	347	397
								69	81	90	98	109	129	151	98	110	120	133	157	185	211
40								127	153	172	188	209	251	298	169	190	207	231	278	330	377
								64	75	84	91	101	119	140	91	102	111	123	146	171	195
41															161	181	197	220	264	314	359
															85	95	103	114	135	159	181
42															153	173	188	209	252	299	342
															79	88	96	106	126	148	168
43															146	165	179	200	240	285	326
															73	82	89	99	117	138	157
44															139	157	171	191	229	272	311
															68	76	83	92	109	128	146

ASD

STANDARD LOAD TABLE FOR OPEN WEB STEEL JOISTS, K-SERIES
Based on a 50 ksi Maximum Yield Strength - Loads Shown In Pounds Per Linear Foot (plf)

Joist Designation	24K4	24K5	24K6	24K7	24K8	24K9	24K10	24K12	26K5	26K6	26K7	26K8	26K9	26K10	26K12
Depth (In.)	24	24	24	24	24	24	24	24	26	26	26	26	26	26	26
Approx. Wt. (lbs./ft.)	7.8	7.9	8.5	9.0	9.4	10.3	11.7	13.5	8.1	8.6	9.0	9.7	10.4	11.8	13.7
Span (ft.) ↓															
23	550	550	550	550	550	550	550	550							
	550	550	550	550	550	550	550	550							
24	520	550	550	550	550	550	550	550							
	516	544	544	544	544	544	544	544							
25	479	540	550	550	550	550	550	550	550	550	550	550	550	550	550
	456	511	520	520	520	520	520	520	550	550	550	550	550	550	550
26	442	499	543	550	550	550	550	550	542	550	550	550	550	550	550
	405	453	493	499	499	499	499	499	535	541	541	541	541	541	541
27	410	462	503	550	550	550	550	550	502	547	550	550	550	550	550
	361	404	439	479	479	479	479	479	477	519	522	522	522	522	522
28	381	429	467	521	550	550	550	550	466	508	550	550	550	550	550
	323	362	393	436	456	456	456	456	427	464	501	501	501	501	501
29	354	400	435	485	536	550	550	550	434	473	527	550	550	550	550
	290	325	354	392	429	436	436	436	384	417	463	479	479	479	479
30	331	373	406	453	500	544	550	550	405	441	492	544	550	550	550
	262	293	319	353	387	419	422	422	346	377	417	457	459	459	459
31	310	349	380	424	468	510	550	550	379	413	460	509	550	550	550
	237	266	289	320	350	379	410	410	314	341	378	413	444	444	444
32	290	327	357	397	439	478	549	549	356	387	432	477	519	549	549
	215	241	262	290	318	344	393	393	285	309	343	375	407	431	431
33	273	308	335	373	413	449	532	532	334	364	406	448	488	532	532
	196	220	239	265	289	313	368	368	259	282	312	342	370	404	404
34	257	290	315	351	388	423	502	516	315	343	382	422	459	516	516
	179	201	218	242	264	286	337	344	237	257	285	312	338	378	378
35	242	273	297	331	366	399	473	501	297	323	360	398	433	501	501
	164	184	200	221	242	262	308	324	217	236	261	286	310	356	356
36	229	258	281	313	346	377	447	487	280	305	340	376	409	486	487
	150	169	183	203	222	241	283	306	199	216	240	263	284	334	334
37	216	244	266	296	327	356	423	474	265	289	322	356	387	460	474
	138	155	169	187	205	222	260	290	183	199	221	242	262	308	315
38	205	231	252	281	310	338	401	461	251	274	305	337	367	436	461
	128	143	156	172	189	204	240	275	169	184	204	223	241	284	299
39	195	219	239	266	294	320	380	449	238	260	289	320	348	413	449
	118	132	144	159	174	189	222	261	156	170	188	206	223	262	283
40	185	208	227	253	280	304	361	438	227	247	275	304	331	393	438
	109	122	133	148	161	175	206	247	145	157	174	191	207	243	269
41	176	198	216	241	266	290	344	427	215	235	262	289	315	374	427
	101	114	124	137	150	162	191	235	134	146	162	177	192	225	256
42	168	189	206	229	253	276	327	417	205	224	249	275	300	356	417
	94	106	115	127	139	151	177	224	125	136	150	164	178	210	244
43	160	180	196	219	242	263	312	406	196	213	238	263	286	339	407
	88	98	107	118	130	140	165	213	116	126	140	153	166	195	232
44	153	172	187	209	231	251	298	387	187	204	227	251	273	324	398
	82	92	100	110	121	131	154	199	108	118	131	143	155	182	222
45	146	164	179	199	220	240	285	370	179	194	217	240	261	310	389
	76	86	93	103	113	122	144	185	101	110	122	133	145	170	212
46	139	157	171	191	211	230	272	354	171	186	207	229	250	296	380
	71	80	87	97	106	114	135	174	95	103	114	125	135	159	203
47	133	150	164	183	202	220	261	339	164	178	199	219	239	284	369
	67	75	82	90	99	107	126	163	89	96	107	117	127	149	192
48	128	144	157	175	194	211	250	325	157	171	190	210	229	272	353
	63	70	77	85	93	101	118	153	83	90	100	110	119	140	180
49									150	164	183	202	220	261	339
									78	85	94	103	112	131	169
50									144	157	175	194	211	250	325
									73	80	89	97	105	124	159
51									139	151	168	186	203	241	313
									69	75	83	91	99	116	150
52									133	145	162	179	195	231	301
									65	71	79	86	93	110	142

ASD

STANDARD LOAD TABLE FOR OPEN WEB STEEL JOISTS, K-SERIES
Based on a 50 ksi Maximum Yield Strength - Loads Shown In Pounds Per Linear Foot (plf)

Joist Designation	28K6	28K7	28K8	28K9	28K10	28K12	30K7	30K8	30K9	30K10	30K11	30K12
Depth (In.)	28	28	28	28	28	28	30	30	30	30	30	30
Approx. Wt. (lbs./ft.)	8.9	9.2	9.8	10.5	11.8	14.5	9.6	10.0	10.6	11.9	13.3	15.0
Span (ft.) ↓												
27	550 550	550 550	550 550	550 550	550 550	550 550						
28	548 541	550 543	550 543	550 543	550 543	550 543						
29	511 486	550 522	550 522	550 522	550 522	550 522	550 550	550 550	550 550	550 550	550 550	550 550
30	477 439	531 486	550 500	550 500	550 500	550 500	550 543	550 543	550 543	550 543	550 543	550 543
31	446 397	497 440	550 480	550 480	550 480	550 480	534 508	550 520	550 520	550 520	550 520	550 520
32	418 361	466 400	515 438	549 463	549 463	549 463	501 461	549 500	549 500	549 500	549 500	549 500
33	393 329	438 364	484 399	527 432	532 435	532 435	471 420	520 460	532 468	532 468	532 468	532 468
34	370 300	412 333	456 364	496 395	516 410	516 410	443 384	490 420	516 441	516 441	516 441	516 441
35	349 275	389 305	430 333	468 361	501 389	501 389	418 351	462 384	501 415	501 415	501 415	501 415
36	330 252	367 280	406 306	442 332	487 366	487 366	395 323	436 353	475 383	487 392	487 392	487 392
37	312 232	348 257	384 282	418 305	474 344	474 344	373 297	413 325	449 352	474 374	474 374	474 374
38	296 214	329 237	364 260	396 282	461 325	461 325	354 274	391 300	426 325	461 353	461 353	461 353
39	280 198	313 219	346 240	376 260	447 306	449 308	336 253	371 277	404 300	449 333	449 333	449 333
40	266 183	297 203	328 222	357 241	424 284	438 291	319 234	353 256	384 278	438 315	438 315	438 315
41	253 170	283 189	312 206	340 224	404 263	427 277	303 217	335 238	365 258	427 300	427 300	427 300
42	241 158	269 175	297 192	324 208	384 245	417 264	289 202	320 221	348 240	413 282	417 284	417 284
43	230 147	257 163	284 179	309 194	367 228	407 252	276 188	305 206	332 223	394 263	407 270	407 270
44	220 137	245 152	271 167	295 181	350 212	398 240	263 176	291 192	317 208	376 245	398 258	398 258
45	210 128	234 142	259 156	282 169	334 198	389 229	251 164	278 179	303 195	359 229	389 246	389 246
46	201 120	224 133	248 146	270 158	320 186	380 219	241 153	266 168	290 182	344 214	380 236	380 236
47	192 112	214 125	237 136	258 148	306 174	372 210	230 144	255 157	277 171	329 201	372 226	372 226
48	184 105	206 117	227 128	247 139	294 163	365 201	221 135	244 148	266 160	315 188	362 215	365 216
49	177 99	197 110	218 120	237 130	282 153	357 193	212 127	234 139	255 150	303 177	347 202	357 207
50	170 93	189 103	209 113	228 123	270 144	350 185	203 119	225 130	245 141	291 166	333 190	350 199
51	163 88	182 97	201 106	219 115	260 136	338 175	195 112	216 123	235 133	279 157	320 179	343 192
52	157 83	175 92	193 100	210 109	250 128	325 165	188 106	208 116	226 126	268 148	308 169	336 184
53	151 78	168 87	186 95	203 103	240 121	313 156	181 100	200 109	218 119	258 140	296 159	330 177
54	145 74	162 82	179 89	195 97	232 114	301 147	174 94	192 103	209 112	249 132	285 150	324 170
55	140 70	156 77	173 85	188 92	223 108	290 139	168 89	185 98	202 106	240 125	275 142	312 161
56	135 66	151 73	166 80	181 87	215 102	280 132	162 84	179 92	195 100	231 118	265 135	301 153
57							156 80	173 88	188 95	223 112	256 128	290 145
58							151 76	167 83	181 90	215 106	247 121	280 137
59							146 72	161 79	175 86	208 101	239 115	271 130
60							141 69	156 75	169 81	201 96	231 109	262 124

ASD

METRIC LOAD TABLE FOR OPEN WEB STEEL JOISTS, K-SERIES
Based On A 345 MPa Maximum Yield Strength - Loads Shown In Kilonewtons Per Meter (kN/m)

Joist Designation	10K1	12K1	12K3	12K5	14K1	14K3	14K4	14K6	16K2	16K3	16K4	16K5	16K6	16K7	16K9
Depth (mm)	254	305	305	305	356	356	356	356	406	406	406	406	406	406	406
Approx. Wt (kN/m)	0.07	0.07	0.08	0.10	0.08	0.09	0.10	0.11	0.08	0.09	0.10	0.11	0.12	0.13	0.15
Span (mm) ↓															
3048	8.02 8.02														
3353	8.02 7.90														
3658	8.02 6.64	8.02 8.02	8.02 8.02	8.02 8.02											
3962	6.99 5.29	8.02 7.44	8.02 7.44	8.02 7.44											
4267	6.01 4.21	7.29 6.20	8.02 6.75	8.02 6.75	8.02 8.02	8.02 8.02	8.02 8.02	8.02 8.02							
4572	5.22 3.41	6.33 5.02	7.92 6.24	8.02 6.33	7.45 6.93	8.02 7.39	8.02 7.39	8.02 7.39							
4877	4.56 2.80	5.54 4.11	6.94 5.12	8.02 5.77	6.53 5.69	8.02 6.81	8.02 6.81	8.02 6.81	8.02 8.02	8.02 8.02	8.02 8.02	8.02 8.02	8.02 8.02	8.02 8.02	8.02 8.02
5182	4.04 2.32	4.90 3.41	6.12 4.24	8.02 5.34	5.76 4.72	7.22 5.89	8.02 6.46	8.02 6.46	7.47 7.12	8.02 7.67	8.02 7.67	8.02 7.67	8.02 7.67	8.02 7.67	8.02 7.67
5486	3.59 1.95	4.36 2.87	5.45 3.57	7.39 4.62	5.13 3.96	6.43 4.94	7.73 5.79	8.02 5.95	6.65 5.96	7.41 6.65	8.02 7.15	8.02 7.15	8.02 7.15	8.02 7.15	8.02 7.15
5791	3.22 1.64	3.91 2.43	4.88 3.02	6.62 3.92	4.59 3.35	5.76 4.18	6.93 4.90	8.02 5.58	5.95 5.06	6.64 5.63	7.98 6.59	8.02 6.64	8.02 6.64	8.02 6.64	8.02 6.64
6096	2.90 1.41	3.51 2.07	4.40 2.58	5.96 3.35	4.14 2.87	5.19 3.59	6.24 4.18	7.66 5.06	5.37 4.33	5.98 4.81	7.19 5.63	8.02 6.21	8.02 6.21	8.02 6.21	8.02 6.21
6401		3.18 1.79	3.98 2.23	5.39 2.88	3.75 2.48	4.69 3.09	5.66 3.61	6.93 4.36	4.85 3.72	5.41 4.15	6.52 4.85	7.34 5.44	7.99 5.91	8.02 5.92	8.02 5.92
6706		2.90 1.54	3.63 1.92	4.91 2.51	3.41 2.14	4.27 2.68	5.15 3.13	6.30 3.77	4.42 3.23	4.91 3.60	5.92 4.21	6.68 4.71	7.26 5.12	8.02 5.61	8.02 5.61
7010		2.64 1.35	3.31 1.69	4.49 2.18	3.12 1.86	3.91 2.33	4.69 2.74	5.76 3.29	4.04 2.83	4.49 3.15	5.41 3.67	6.10 4.11	6.64 4.48	7.39 4.94	8.02 5.29
7315		2.42 1.18	3.03 1.47	4.11 1.92	2.86 1.64	3.57 2.05	4.30 2.40	5.28 2.90	3.70 2.48	4.13 2.75	4.96 3.22	5.60 3.61	6.10 3.92	6.78 4.34	8.02 5.04
7620					2.62 1.45	3.29 1.80	3.96 2.11	4.87 2.55	3.41 2.18	3.79 2.43	4.56 2.84	5.15 3.19	5.60 3.47	6.24 3.83	7.50 4.53
7925					2.42 1.28	3.05 1.60	3.66 1.88	4.49 2.27	3.15 1.94	3.50 2.15	4.21 2.52	4.75 2.83	5.18 3.07	5.76 3.40	6.91 4.02
8230					2.24 1.15	2.81 1.43	3.40 1.67	4.15 2.02	2.91 1.73	3.25 1.92	3.91 2.26	4.40 2.52	4.80 2.74	5.34 3.03	6.40 3.59
8534					2.08 1.02	2.62 1.28	3.15 1.50	3.86 1.80	2.71 1.54	3.02 1.72	3.63 2.01	4.10 2.26	4.46 2.45	4.96 2.71	5.95 3.21
8839									2.52 1.38	2.81 1.54	3.38 1.80	3.80 2.02	4.15 2.20	4.62 2.43	5.54 2.88
9144									2.34 1.25	2.62 1.40	3.15 1.63	3.56 1.83	3.88 1.99	4.31 2.20	5.18 2.59
9449									2.20 1.13	2.45 1.26	2.96 1.47	3.32 1.66	3.63 1.80	4.04 1.99	4.84 2.34
9754									2.07 1.03	2.30 1.15	2.77 1.34	3.12 1.50	3.40 1.63	3.77 1.80	4.53 2.14

ASD

METRIC LOAD TABLE FOR OPEN WEB STEEL JOISTS, K-SERIES
Based On A 345 MPa Maximum Yield Strength - Loads Shown In Kilonewtons Per Meter (kN/m)

Joist Designation	18K3	18K4	18K5	18K6	18K7	18K9	18K10	20K3	20K4	20K5	20K6	20K7	20K9	20K10	22K4	22K5	22K6	22K7	22K9	22K10	22K11
Depth (mm)	457	457	457	457	457	457	457	508	508	508	508	508	508	508	559	559	559	559	559	559	559
Approx. Wt. (kN/m)	0.09	0.11	0.11	0.12	0.13	0.15	0.17	0.09	0.11	0.11	0.12	0.13	0.15	0.17	0.11	0.11	0.12	0.13	0.15	0.17	0.17
Span (mm) ↓																					
5486	8.02	8.02	8.02	8.02	8.02	8.02	8.02														
	8.02	8.02	8.02	8.02	8.02	8.02	8.02														
5791	7.50	8.02	8.02	8.02	8.02	8.02	8.02	8.02	8.02	8.02	8.02	8.02	8.02	8.02							
	7.20	7.63	7.63	7.63	7.63	7.63	7.63	8.02	8.02	8.02	8.02	8.02	8.02	8.02							
6096	6.75	8.02	8.02	8.02	8.02	8.02	8.02	7.54	8.02	8.02	8.02	8.02	8.02	8.02							
	6.17	7.15	7.15	7.15	7.15	7.15	7.15	7.54	8.02	8.02	8.02	8.02	8.02	8.02							
6401	6.12	7.38	8.02	8.02	8.02	8.02	8.02	6.82	8.02	8.02	8.02	8.02	8.02	8.02	8.02	8.02	8.02	8.02	8.02	8.02	8.02
	5.31	6.21	6.71	6.71	6.71	6.71	6.71	6.61	7.58	7.58	7.58	7.58	7.58	7.58	8.02	8.02	8.02	8.02	8.02	8.02	8.02
6706	5.57	6.71	7.55	8.02	8.02	8.02	8.02	6.21	7.50	8.02	8.02	8.02	8.02	8.02	8.02	8.02	8.02	8.02	8.02	8.02	8.02
	4.61	5.39	6.04	6.39	6.39	6.39	6.39	5.73	6.72	7.15	7.15	7.15	7.15	7.15	7.99	7.99	7.99	7.99	7.99	7.99	7.99
7010	5.09	6.12	6.90	7.53	8.02	8.02	8.02	5.67	6.84	7.72	8.02	8.02	8.02	8.02	7.55	8.02	8.02	8.02	8.02	8.02	8.02
	4.02	4.71	5.28	5.73	6.10	6.10	6.10	5.02	5.86	6.58	6.82	6.82	6.82	6.82	7.16	7.55	7.55	7.55	7.55	7.55	7.55
7315	4.67	5.61	6.33	6.90	7.67	8.02	8.02	5.21	6.27	7.07	7.70	8.02	8.02	8.02	6.93	7.82	8.02	8.02	8.02	8.02	8.02
	3.53	4.14	4.64	5.03	5.57	5.77	5.77	4.40	5.15	5.77	6.27	6.53	6.53	6.53	6.28	7.04	7.22	7.22	7.22	7.22	7.22
7620	4.29	5.18	5.83	6.34	7.07	8.02	8.02	4.80	5.77	6.50	7.09	7.89	8.02	8.02	6.39	7.19	7.83	8.02	8.02	8.02	8.02
	3.12	3.64	4.10	4.45	4.91	5.50	5.50	3.88	4.55	5.10	5.54	6.14	6.21	6.21	5.56	6.23	6.77	6.91	6.91	6.91	6.91
7925	3.96	4.78	5.38	5.86	6.53	7.85	8.02	4.43	5.34	6.01	6.55	7.29	8.02	8.02	5.89	6.64	7.23	8.02	8.02	8.02	8.02
	2.77	3.23	3.63	3.95	4.36	5.16	5.26	3.44	4.04	4.52	4.91	5.44	5.91	5.91	4.93	5.53	5.99	6.62	6.62	6.62	6.62
8230	3.67	4.42	4.99	5.42	6.05	7.26	8.02	4.10	4.94	5.57	6.07	6.75	8.02	8.02	5.45	6.15	6.69	7.47	8.02	8.02	8.02
	2.46	2.88	3.23	3.51	3.89	4.59	5.06	3.07	3.60	4.04	4.39	4.85	5.67	5.67	4.39	4.91	5.35	5.92	6.30	6.30	6.30
8534	3.41	4.11	4.64	5.04	5.61	6.75	7.99	3.80	4.59	5.18	5.63	6.27	7.54	8.02	5.07	5.72	6.23	6.93	8.02	8.02	8.02
	2.20	2.58	2.90	3.15	3.48	4.11	4.83	2.75	3.22	3.61	3.92	4.34	5.15	5.47	3.94	4.40	4.78	5.31	6.02	6.02	6.02
8839	3.18	3.83	4.31	4.69	5.23	6.28	7.45	3.54	4.27	4.81	5.25	5.85	7.03	8.02	4.72	5.32	5.80	6.46	7.76	8.02	8.02
	1.98	2.32	2.61	2.83	3.13	3.70	4.34	2.48	2.90	3.25	3.53	3.91	4.62	5.23	3.53	3.96	4.30	4.77	5.64	5.82	5.82
9144	2.96	3.57	4.02	4.39	4.88	5.86	6.96	3.31	3.99	4.49	4.90	5.45	6.56	7.77	4.40	4.97	5.41	6.02	7.25	8.02	8.02
	1.79	2.10	2.34	2.55	2.83	3.34	3.92	2.23	2.61	2.93	3.18	3.53	4.17	4.90	3.19	3.57	3.88	4.30	5.09	5.61	5.61
9449	2.77	3.34	3.76	4.10	4.56	5.48	6.50	3.09	3.73	4.21	4.58	5.10	6.14	7.28	4.13	4.65	5.06	5.64	6.78	8.02	8.02
	1.61	1.89	2.13	2.30	2.55	3.02	3.54	2.01	2.36	2.65	2.88	3.19	3.77	4.43	2.88	3.23	3.51	3.89	4.61	5.38	5.38
9754	2.59	3.13	3.53	3.85	4.29	5.15	6.10	2.90	3.50	3.95	4.30	4.78	5.76	6.82	3.86	4.36	4.75	5.29	6.36	7.54	8.01
	1.47	1.72	1.92	2.10	2.32	2.74	3.22	1.83	2.14	2.40	2.61	2.90	3.42	4.02	2.62	2.93	3.19	3.53	4.18	4.91	5.18
10058	2.45	2.94	3.32	3.61	4.02	4.84	5.73	2.72	3.29	3.70	4.04	4.50	5.41	6.42	3.63	4.10	4.46	4.97	5.98	7.09	7.76
	1.34	1.57	1.76	1.91	2.11	2.49	2.93	1.66	1.95	2.18	2.37	2.64	3.12	3.66	2.39	2.67	2.90	3.22	3.80	4.48	4.87
10363	2.30	2.77	3.12	3.40	3.79	4.55	5.39	2.56	3.09	3.48	3.80	4.23	5.09	6.04	3.42	3.86	4.20	4.68	5.63	6.68	7.53
	1.22	1.43	1.60	1.75	1.92	2.27	2.68	1.53	1.78	1.99	2.17	2.40	2.84	3.34	2.17	2.43	2.65	2.94	3.48	4.08	4.58
10668	2.17	2.61	2.94	3.21	3.57	4.29	5.09	2.42	2.91	3.29	3.59	3.99	4.80	5.69	3.22	3.63	3.96	4.42	5.31	6.30	7.20
	1.12	1.31	1.47	1.60	1.76	2.08	2.45	1.40	1.63	1.83	1.99	2.20	2.61	3.06	1.99	2.23	2.43	2.69	3.19	3.75	4.26
10973	2.05	2.46	2.78	3.03	3.38	4.05	4.81	2.29	2.75	3.10	3.38	3.77	4.53	5.38	3.05	3.44	3.75	4.17	5.02	5.95	6.81
	1.02	1.19	1.34	1.47	1.61	1.92	2.24	1.28	1.50	1.67	1.82	2.02	2.39	2.81	1.83	2.05	2.23	2.46	2.93	3.44	3.92
11278								2.15	2.61	2.94	3.21	3.57	4.29	5.09	2.88	3.25	3.54	3.95	4.74	5.63	6.45
								1.18	1.38	1.54	1.67	1.86	2.20	2.59	1.69	1.89	2.05	2.27	2.69	3.16	3.60
11582								2.05	2.48	2.78	3.03	3.38	4.07	4.83	2.72	3.07	3.35	3.73	4.49	5.34	6.11
								1.07	1.26	1.43	1.54	1.72	2.02	2.39	1.56	1.73	1.89	2.10	2.48	2.91	3.32
11887								1.94	2.34	2.64	2.88	3.21	3.86	4.58	2.59	2.91	3.18	3.54	4.26	5.06	5.79
								1.00	1.18	1.31	1.43	1.59	1.88	2.20	1.43	1.60	1.75	1.94	2.29	2.69	3.07
12192								1.85	2.23	2.51	2.74	3.05	3.66	4.34	2.46	2.77	3.02	3.37	4.05	4.81	5.50
								0.93	1.09	1.22	1.32	1.47	1.73	2.04	1.32	1.48	1.61	1.79	2.13	2.49	2.84
12497															2.34	2.64	2.87	3.21	3.85	4.58	5.23
															1.24	1.38	1.50	1.66	1.97	2.32	2.64
12802															2.23	2.52	2.74	3.05	3.67	4.36	4.99
															1.15	1.28	1.40	1.54	1.83	2.15	2.45
13106															2.13	2.40	2.61	2.91	3.50	4.15	4.75
															1.06	1.19	1.29	1.44	1.70	2.01	2.29
13411															2.02	2.29	2.49	2.78	3.34	3.96	4.53
															0.99	1.10	1.21	1.34	1.59	1.86	2.13

ASD

METRIC LOAD TABLE FOR OPEN WEB STEEL JOISTS, K-SERIES
Based On A 345 MPa Maximum Yield Strength - Loads Shown In Kilonewtons Per Meter (kN/m)

Joist Designation	24K4	24K5	24K6	24K7	24K8	24K9	24K10	24K12	26K5	26K6	26K7	26K8	26K9	26K10	26K12
Depth (mm)	610	610	610	610	610	610	610	610	660	660	660	660	660	660	660
Approx. Wt. (kN/m)	0.11	0.12	0.12	0.13	0.14	0.15	0.17	0.20	0.12	0.13	0.13	0.14	0.15	0.17	0.20
Span (mm) ↓															
7010	8.02	8.02	8.02	8.02	8.02	8.02	8.02	8.02							
	8.02	8.02	8.02	8.02	8.02	8.02	8.02	8.02							
7315	7.58	8.02	8.02	8.02	8.02	8.02	8.02	8.02							
	7.53	7.93	7.93	7.93	7.93	7.93	7.93	7.93							
7620	6.99	7.88	8.02	8.02	8.02	8.02	8.02	8.02	8.02	8.02	8.02	8.02	8.02	8.02	8.02
	6.65	7.45	7.58	7.58	7.58	7.58	7.58	7.58	8.02	8.02	8.02	8.02	8.02	8.02	8.02
7925	6.45	7.28	7.92	8.02	8.02	8.02	8.02	8.02	7.90	8.02	8.02	8.02	8.02	8.02	8.02
	5.91	6.61	7.19	7.28	7.28	7.28	7.28	7.28	7.80	7.89	7.89	7.89	7.89	7.89	7.89
8230	5.98	6.74	7.34	8.02	8.02	8.02	8.02	8.02	7.32	7.98	8.02	8.02	8.02	8.02	8.02
	5.26	5.89	6.40	6.99	6.99	6.99	6.99	6.99	6.96	7.57	7.61	7.61	7.61	7.61	7.61
8534	5.56	6.26	6.81	7.60	8.02	8.02	8.02	8.02	6.80	7.41	8.02	8.02	8.02	8.02	8.02
	4.71	5.28	5.73	6.36	6.65	6.65	6.65	6.65	6.23	6.77	7.31	7.31	7.31	7.31	7.31
8839	5.16	5.83	6.34	7.07	7.82	8.02	8.02	8.02	6.33	6.90	7.69	8.02	8.02	8.02	8.02
	4.23	4.74	5.16	5.72	6.26	6.36	6.36	6.36	5.60	6.08	6.75	6.99	6.99	6.99	6.99
9144	4.83	5.44	5.92	6.61	7.29	7.93	8.02	8.02	5.91	6.43	7.18	7.93	8.02	8.02	8.02
	3.82	4.27	4.65	5.15	5.64	6.11	6.15	6.15	5.04	5.50	6.08	6.66	6.69	6.69	6.69
9449	4.52	5.09	5.54	6.18	6.82	7.44	8.02	8.02	5.53	6.02	6.71	7.42	8.02	8.02	8.02
	3.45	3.88	4.21	4.67	5.10	5.53	5.98	5.98	4.58	4.97	5.51	6.02	6.47	6.47	6.47
9754	4.23	4.77	5.21	5.79	6.40	6.97	8.01	8.01	5.19	5.64	6.30	6.96	7.57	8.01	8.01
	3.13	3.51	3.82	4.23	4.64	5.02	5.73	5.73	4.15	4.50	5.00	5.47	5.93	6.28	6.28
10058	3.98	4.49	4.88	5.44	6.02	6.55	7.76	7.76	4.87	5.31	5.92	6.53	7.12	7.76	7.76
	2.86	3.21	3.48	3.86	4.21	4.56	5.37	5.37	3.77	4.11	4.55	4.99	5.39	5.89	5.89
10363	3.75	4.23	4.59	5.12	5.66	6.17	7.32	7.53	4.59	5.00	5.57	6.15	6.69	7.53	7.53
	2.61	2.93	3.18	3.53	3.85	4.17	4.91	5.02	3.45	3.75	4.15	4.55	4.93	5.51	5.51
10668	3.53	3.98	4.33	4.83	5.34	5.82	6.90	7.31	4.33	4.71	5.25	5.80	6.31	7.31	7.31
	2.39	2.68	2.91	3.22	3.53	3.82	4.49	4.72	3.16	3.44	3.80	4.17	4.52	5.19	5.19
10973	3.34	3.76	4.10	4.56	5.04	5.50	6.52	7.10	4.08	4.45	4.96	5.48	5.96	7.09	7.10
	2.18	2.46	2.67	2.96	3.23	3.51	4.13	4.46	2.90	3.15	3.50	3.83	4.14	4.87	4.87
11278	3.15	3.56	3.88	4.31	4.77	5.19	6.17	6.91	3.86	4.21	4.69	5.19	5.64	6.71	6.91
	2.01	2.26	2.46	2.72	2.99	3.23	3.79	4.23	2.67	2.90	3.22	3.53	3.82	4.49	4.59
11582	2.99	3.37	3.67	4.10	4.52	4.93	5.85	6.72	3.66	3.99	4.45	4.91	5.35	6.36	6.72
	1.86	2.08	2.27	2.51	2.75	2.97	3.50	4.01	2.46	2.68	2.97	3.25	3.51	4.14	4.36
11887	2.84	3.19	3.48	3.88	4.29	4.67	5.54	6.55	3.47	3.79	4.21	4.67	5.07	6.02	6.55
	1.72	1.92	2.10	2.32	2.53	2.75	3.23	3.80	2.27	2.48	2.74	3.00	3.25	3.82	4.13
12192	2.69	3.03	3.31	3.69	4.08	4.43	5.26	6.39	3.31	3.60	4.01	4.43	4.83	5.73	6.39
	1.59	1.78	1.94	2.15	2.34	2.55	3.00	3.60	2.11	2.29	2.53	2.78	3.02	3.54	3.92
12497	2.56	2.88	3.15	3.51	3.88	4.23	5.02	6.23	3.13	3.42	3.82	4.21	4.59	5.45	6.23
	1.47	1.66	1.80	1.99	2.18	2.36	2.78	3.42	1.95	2.13	2.36	2.58	2.80	3.28	3.73
12802	2.45	2.75	3.00	3.34	3.69	4.02	4.77	6.08	2.99	3.26	3.63	4.01	4.37	5.19	6.08
	1.37	1.54	1.67	1.85	2.02	2.20	2.58	3.26	1.82	1.98	2.18	2.39	2.59	3.06	3.56
13106	2.33	2.62	2.86	3.19	3.53	3.83	4.55	5.92	2.86	3.10	3.47	3.83	4.17	4.94	5.93
	1.28	1.43	1.56	1.72	1.89	2.04	2.40	3.10	1.69	1.83	2.04	2.23	2.42	2.84	3.38
13411	2.23	2.51	2.72	3.05	3.37	3.66	4.34	5.64	2.72	2.97	3.31	3.66	3.98	4.72	5.80
	1.19	1.34	1.45	1.60	1.76	1.91	2.24	2.90	1.57	1.72	1.91	2.08	2.26	2.65	3.23
13716	2.13	2.39	2.61	2.90	3.21	3.50	4.15	5.39	2.61	2.83	3.16	3.50	3.80	4.52	5.67
	1.10	1.25	1.35	1.50	1.64	1.78	2.10	2.69	1.47	1.60	1.78	1.94	2.11	2.48	3.09
14021	2.02	2.29	2.49	2.78	3.07	3.35	3.96	5.16	2.49	2.71	3.02	3.34	3.64	4.31	5.54
	1.03	1.16	1.26	1.41	1.54	1.66	1.97	2.53	1.38	1.50	1.66	1.82	1.97	2.32	2.96
14326	1.94	2.18	2.39	2.67	2.94	3.21	3.80	4.94	2.39	2.59	2.90	3.19	3.48	4.14	5.38
	0.97	1.09	1.19	1.31	1.44	1.56	1.83	2.37	1.29	1.40	1.56	1.70	1.85	2.17	2.80
14630	1.86	2.10	2.29	2.55	2.83	3.07	3.64	4.74	2.29	2.49	2.77	3.06	3.34	3.96	5.15
	0.91	1.02	1.12	1.24	1.35	1.47	1.72	2.23	1.21	1.31	1.45	1.60	1.73	2.04	2.62
14935									2.18	2.39	2.67	2.94	3.21	3.80	4.94
									1.13	1.24	1.37	1.50	1.63	1.91	2.46
15240									2.10	2.29	2.55	2.83	3.07	3.64	4.74
									1.06	1.16	1.29	1.41	1.53	1.80	2.32
15545									2.02	2.20	2.45	2.71	2.96	3.51	4.56
									1.00	1.09	1.21	1.32	1.44	1.69	2.18
15850									1.94	2.11	2.36	2.61	2.84	3.37	4.39
									0.94	1.03	1.15	1.25	1.35	1.60	2.07

ASD

METRIC LOAD TABLE FOR OPEN WEB STEEL JOISTS, K-SERIES
Based On A 345 MPa Maximum Yield Strength - Loads Shown In Kilonewtons Per Meter (kN/m)

Joist Designation	28K6	28K7	28K8	28K9	28K10	28K12	30K7	30K8	30K9	30K10	30K11	30K12
Depth (mm)	711	711	711	711	711	711	762	762	762	762	762	762
Approx. Wt. (kN/m)	0.13	0.13	0.14	0.15	0.17	0.21	0.14	0.15	0.15	0.17	0.19	0.22
Span (mm) ↓												
8230	8.02	8.02	8.02	8.02	8.02	8.02						
	8.02	8.02	8.02	8.02	8.02	8.02						
8534	7.99	8.02	8.02	8.02	8.02	8.02						
	7.89	7.92	7.92	7.92	7.92	7.92						
8839	7.45	8.02	8.02	8.02	8.02	8.02	8.02	8.02	8.02	8.02	8.02	8.02
	7.09	7.61	7.61	7.61	7.61	7.61	8.02	8.02	8.02	8.02	8.02	8.02
9144	6.96	7.74	8.02	8.02	8.02	8.02	8.02	8.02	8.02	8.02	8.02	8.02
	6.40	7.09	7.29	7.29	7.29	7.29	7.92	7.92	7.92	7.92	7.92	7.92
9449	6.50	7.25	8.02	8.02	8.02	8.02	7.79	8.02	8.02	8.02	8.02	8.02
	5.79	6.42	7.00	7.00	7.00	7.00	7.41	7.58	7.58	7.58	7.58	7.58
9754	6.10	6.80	7.51	8.01	8.01	8.01	7.31	8.01	8.01	8.01	8.01	8.01
	5.26	5.83	6.39	6.75	6.75	6.75	6.72	7.29	7.29	7.29	7.29	7.29
10058	5.73	6.39	7.06	7.69	7.76	7.76	6.87	7.58	7.76	7.76	7.76	7.76
	4.80	5.31	5.82	6.30	6.34	6.34	6.12	6.71	6.82	6.82	6.82	6.82
10363	5.39	6.01	6.65	7.23	7.53	7.53	6.46	7.15	7.53	7.53	7.53	7.53
	4.37	4.85	5.31	5.76	5.98	5.98	5.60	6.12	6.43	6.43	6.43	6.43
10668	5.09	5.67	6.27	6.82	7.31	7.31	6.10	6.74	7.31	7.31	7.31	7.31
	4.01	4.45	4.85	5.26	5.67	5.67	5.12	5.60	6.05	6.05	6.05	6.05
10973	4.81	5.35	5.92	6.45	7.10	7.10	5.76	6.36	6.93	7.10	7.10	7.10
	3.67	4.08	4.46	4.84	5.34	5.34	4.71	5.15	5.58	5.72	5.72	5.72
11278	4.55	5.07	5.60	6.10	6.91	6.91	5.44	6.02	6.55	6.91	6.91	6.91
	3.38	3.75	4.11	4.45	5.02	5.02	4.33	4.74	5.13	5.45	5.45	5.45
11582	4.31	4.80	5.31	5.77	6.72	6.72	5.16	5.70	6.21	6.72	6.72	6.72
	3.12	3.45	3.79	4.11	4.74	4.74	3.99	4.37	4.74	5.15	5.15	5.15
11887	4.08	4.56	5.04	5.48	6.52	6.55	4.90	5.41	5.89	6.55	6.55	6.55
	2.88	3.19	3.50	3.79	4.46	4.49	3.69	4.04	4.37	4.85	4.85	4.85
12192	3.88	4.33	4.78	5.21	6.18	6.39	4.65	5.15	5.60	6.39	6.39	6.39
	2.67	2.96	3.23	3.51	4.14	4.24	3.41	3.73	4.05	4.59	4.59	4.59
12497	3.69	4.13	4.55	4.96	5.89	6.23	4.42	4.88	5.32	6.23	6.23	6.23
	2.48	2.75	3.00	3.26	3.83	4.04	3.16	3.47	3.76	4.37	4.37	4.37
12802	3.51	3.92	4.33	4.72	5.60	6.08	4.21	4.67	5.07	6.02	6.08	6.08
	2.30	2.55	2.80	3.03	3.57	3.85	2.94	3.22	3.50	4.11	4.14	4.14
13106	3.35	3.75	4.14	4.50	5.35	5.93	4.02	4.45	4.84	5.74	5.93	5.93
	2.14	2.37	2.61	2.83	3.32	3.67	2.74	3.00	3.25	3.83	3.94	3.94
13411	3.21	3.57	3.95	4.30	5.10	5.80	3.83	4.24	4.62	5.48	5.80	5.80
	1.99	2.21	2.43	2.64	3.09	3.50	2.56	2.80	3.03	3.57	3.76	3.76
13716	3.06	3.41	3.77	4.11	4.87	5.67	3.66	4.05	4.42	5.23	5.67	5.67
	1.86	2.07	2.27	2.46	2.88	3.34	2.39	2.61	2.84	3.34	3.59	3.59
14021	2.93	3.26	3.61	3.94	4.67	5.54	3.51	3.88	4.23	5.02	5.54	5.54
	1.75	1.94	2.13	2.30	2.71	3.19	2.23	2.45	2.65	3.12	3.44	3.44
14326	2.80	3.12	3.45	3.76	4.46	5.42	3.35	3.72	4.04	4.80	5.42	5.42
	1.63	1.82	1.98	2.15	2.53	3.06	2.10	2.29	2.49	2.93	3.29	3.29
14630	2.68	3.00	3.31	3.60	4.29	5.32	3.22	3.56	3.88	4.59	5.28	5.32
	1.53	1.70	1.86	2.02	2.37	2.93	1.97	2.15	2.33	2.74	3.13	3.15
14935	2.58	2.87	3.18	3.45	4.11	5.21	3.09	3.41	3.72	4.42	5.06	5.21
	1.44	1.60	1.75	1.89	2.23	2.81	1.85	2.02	2.18	2.58	2.94	3.02
15240	2.48	2.75	3.05	3.32	3.94	5.10	2.96	3.28	3.57	4.24	4.85	5.10
	1.35	1.50	1.64	1.79	2.10	2.69	1.73	1.89	2.05	2.42	2.77	2.90
15545	2.37	2.65	2.93	3.19	3.79	4.93	2.84	3.15	3.42	4.07	4.67	5.00
	1.28	1.41	1.54	1.67	1.98	2.55	1.63	1.79	1.94	2.29	2.61	2.80
15850	2.29	2.55	2.81	3.06	3.64	4.74	2.74	3.03	3.29	3.91	4.49	4.90
	1.21	1.34	1.45	1.59	1.86	2.40	1.54	1.69	1.83	2.15	2.46	2.68
16154	2.20	2.45	2.71	2.96	3.50	4.56	2.64	2.91	3.18	3.76	4.31	4.81
	1.13	1.26	1.38	1.50	1.76	2.27	1.45	1.59	1.73	2.04	2.32	2.58
16459	2.11	2.36	2.61	2.84	3.38	4.39	2.53	2.80	3.05	3.63	4.15	4.72
	1.07	1.19	1.29	1.41	1.66	2.14	1.37	1.50	1.63	1.92	2.18	2.48
16764	2.04	2.27	2.52	2.74	3.25	4.23	2.45	2.69	2.94	3.50	4.01	4.55
	1.02	1.12	1.24	1.34	1.57	2.02	1.29	1.43	1.54	1.82	2.07	2.34
17069	1.97	2.20	2.42	2.64	3.13	4.08	2.36	2.61	2.84	3.37	3.86	4.39
	0.96	1.06	1.16	1.26	1.48	1.92	1.22	1.34	1.45	1.72	1.97	2.23
17374							2.27	2.52	2.74	3.25	3.73	4.23
							1.16	1.28	1.38	1.63	1.86	2.11
17678							2.20	2.43	2.64	3.13	3.60	4.08
							1.10	1.21	1.31	1.54	1.76	1.99
17983							2.13	2.34	2.55	3.03	3.48	3.95
							1.05	1.15	1.25	1.47	1.67	1.89
18288							2.05	2.27	2.46	2.93	3.37	3.82
							1.00	1.09	1.18	1.40	1.59	1.80

STANDARD LRFD LOAD TABLE

FOR KCS JOISTS

Based on a 50 ksi (345 MPa) Maximum Yield Strength
Adopted by the Steel Joist Institute May 1, 2000
Revised to May 18, 2010 – Effective December 31, 2010

The figures in the following table give the Moment Capacity (kip-in.)(N/m) and Shear Capacity (lbs)(kN). The maximum uniformly distributed load capacity in **LRFD** shall not exceed 825 plf (12.03 kN/M) and a single concentrated load cannot exceed the shear capacity. Sloped parallel-chord KCS Joists shall use the appropriate moment and shear capacity for the span as defined by the length along the slope.

The approximate KCS Joist weights per linear foot (kiloNewtons per meter) shown in this table do not include accessories.

The KCS Joist designation is not used to establish bridging requirements. The Bridging Table Section Numbers given in the KCS Standard Load Table indicate the equivalent K-Series joist of the same depth to be used for determination of the number of bridging rows, the size of horizontal bridging, and the need for erection stability bridging. While the need for erection stability bridging (diagonal bridging with bolted connections at the chords and intersections), can be determined from the **RED** shaded portion of the Standard Load Table, Open Web Steel Joists, K-Series, for convenience the KCS Load Table also includes a column for erection stability bridging. Where the span of the KCS Joist designation exceeds the length in ft. (mm) listed, the row of bridging nearest the joist midspan shall be erection stability bridging. Where “NA” is listed in the column, the KCS Joist designation does not require bolted diagonal erection bridging regardless of span.

For the proper handling of concentrated and/or varying loads, see Section 2.4 in the Code of Standard Practice for Steel Joists and Joist Girders.

LRFD

STANDARD LOAD TABLE FOR KCS OPEN WEB STEEL JOISTS							
Based on a 50 ksi Maximum Yield Strength							
JOIST DESIGNATION	DEPTH (in.)	MOMENT CAPACITY (k-in.)	SHEAR CAPACITY* (lbs)	APPROX. WEIGHT** (lbs/ft.)	GROSS MOMENT OF INERTIA ($in.^4$)	ERECTION STABILITY BRIDGING REQ'D (ft.)	BRIDGING TABLE SECTION NUMBER
10KCS1	10	258	3000	6.0	29	NA	1
10KCS2	10	337	3750	7.5	37	NA	1
10KCS3	10	444	4500	10.0	47	NA	1
12KCS1	12	313	3600	6.0	43	NA	3
12KCS2	12	411	4500	8.0	55	NA	5
12KCS3	12	543	5250	10.0	71	NA	5
14KCS1	14	370	4350	6.5	59	NA	4
14KCS2	14	486	5100	8.0	77	NA	6
14KCS3	14	642	5850	10.0	99	NA	6
16KCS2	16	523	6000	8.5	99	NA	6
16KCS3	16	705	7200	10.5	128	NA	9
16KCS4	16	1080	7950	14.5	192	NA	9
16KCS5	16	1401	8700	18.0	245	NA	9
18KCS2	18	592	7050	9.0	127	35-0	6
18KCS3	18	798	7800	11.0	164	NA	9
18KCS4	18	1225	8550	15.0	247	NA	10
18KCS5	18	1593	9300	18.5	316	NA	10
20KCS2	20	663	7800	9.5	159	36-0	6
20KCS3	20	892	9000	11.5	205	39-0	9
20KCS4	20	1371	11850	16.5	308	NA	10
20KCS5	20	1786	12600	20.0	396	NA	10
22KCS2	22	732	8850	10.0	194	36-0	6
22KCS3	22	987	9900	12.5	251	40-0	9
22KCS4	22	1518	11850	16.5	377	NA	11
22KCS5	22	1978	12900	20.5	485	NA	11
24KCS2	24	801	9450	10.0	232	39-0	6
24KCS3	24	1080	10800	12.5	301	44-0	9
24KCS4	24	1662	12600	16.5	453	NA	12
24KCS5	24	2172	13350	20.5	584	NA	12
26KCS2	26	870	9900	10.0	274	39-0	6
26KCS3	26	1174	11700	12.5	355	44-0	9
26KCS4	26	1809	12750	16.5	536	NA	12
26KCS5	26	2364	13800	20.5	691	NA	12
28KCS2	28	939	10350	10.5	320	40-0	6
28KCS3	28	1269	12000	12.5	414	45-0	9
28KCS4	28	1954	12750	16.5	626	53-0	12
28KCS5	28	2556	13800	20.5	808	53-0	12
30KCS3	30	1362	12000	13.0	478	45-0	9
30KCS4	30	2100	12750	16.5	722	54-0	12
30KCS5	30	2749	13800	21.0	934	54-0	12

*Maximum uniformly distributed load capacity is 825 plf and single concentrated load cannot exceed shear capacity
**Does not include accessories

LRFD

METRIC LOAD TABLE FOR KCS OPEN WEB STEEL JOISTS							
Based on 345 MPa Maximum Yield Strength							
JOIST DESIGNATION	DEPTH (mm)	MOMENT CAPACITY (kN-m)	SHEAR CAPACITY* (kN)	APPROX. WEIGHT** (kN/m)	GROSS MOMENT OF INERTIA (cm^4)	ERECTION STABILITY BRIDGING REQ'D (mm)	BRIDGING TABLE SECTION NUMBER
10KCS1	254	29.1	13.3	0.09	1200	NA	1
10KCS2	254	38.1	16.6	0.11	1540	NA	1
10KCS3	254	50.1	20.0	0.15	1950	NA	1
12KCS1	305	35.4	16.0	0.09	1780	NA	3
12KCS2	305	46.4	20.0	0.12	2280	NA	5
12KCS3	305	61.3	23.3	0.15	2950	NA	5
14KCS1	356	41.8	19.3	0.09	2450	NA	4
14KCS2	356	54.9	22.6	0.12	3200	NA	6
14KCS3	356	72.5	26.0	0.15	4120	NA	6
16KCS2	406	59.1	26.6	0.12	4120	NA	6
16KCS3	406	79.6	32.0	0.15	5320	NA	9
16KCS4	406	122.0	35.3	0.21	7990	NA	9
16KCS5	406	158.2	38.6	0.26	10190	NA	9
18KCS2	457	66.9	31.3	0.13	5280	10668	6
18KCS3	457	90.1	34.6	0.16	6820	NA	9
18KCS4	457	138.4	38.0	0.22	10280	NA	10
18KCS5	457	179.9	41.3	0.27	13150	NA	10
20KCS2	508	74.9	34.6	0.14	6610	10973	6
20KCS3	508	100.7	40.0	0.17	8530	11887	9
20KCS4	508	154.9	52.7	0.24	12810	NA	10
20KCS5	508	201.8	56.0	0.29	16480	NA	10
22KCS2	559	82.7	39.3	0.15	8070	10973	6
22KCS3	559	111.5	44.0	0.18	10440	12192	9
22KCS4	559	171.5	52.7	0.24	15690	NA	11
22KCS5	559	223.5	57.3	0.30	20180	NA	11
24KCS2	610	90.5	42.0	0.15	9650	11887	6
24KCS3	610	122.0	48.0	0.18	12520	13411	9
24KCS4	610	187.7	56.0	0.24	18850	NA	12
24KCS5	610	245.4	59.3	0.30	24300	NA	12
26KCS2	660	98.2	44.0	0.15	11400	11887	6
26KCS3	660	132.7	52.0	0.18	14770	13411	9
26KCS4	660	204.3	56.7	0.24	22310	NA	12
26KCS5	660	267.0	61.3	0.30	28760	NA	12
28KCS2	711	106.0	46.0	0.15	13310	12192	6
28KCS3	711	143.3	53.3	0.18	17230	13716	9
28KCS4	711	220.8	56.7	0.24	26050	16154	12
28KCS5	711	288.7	61.3	0.30	33630	16154	12
30KCS3	762	153.8	53.3	0.19	19890	13716	9
30KCS4	762	237.2	56.7	0.24	30050	16459	12
30KCS5	762	310.6	61.3	0.31	38870	16459	12

*Maximum uniformly distributed load capacity is 8.02 kN/m and single concentrated load cannot exceed shear capacity
**Does not include accessories

STANDARD ASD LOAD TABLE

FOR KCS JOISTS

Based on a 50 ksi (345 MPa) Maximum Yield Strength
Adopted by the Steel Joist Institute May 2, 1994
Revised to May 18, 2010 – Effective December 31, 2010

The figures in the following table give the Moment Capacity (kip-in.)(N/m) and Shear Capacity (lbs)(N). The maximum uniformly distributed load capacity in **ASD** shall not exceed 550 plf (8.02 kN/m) and a single concentrated load cannot exceed the shear capacity. Sloped parallel-chord KCS Joists shall use the appropriate moment and shear capacity for the span as defined by the length along the slope.

The approximate KCS Joist weights per linear foot shown in the table do not include accessories.

The KCS Joist designation is not used to establish bridging requirements. The Bridging Table Section Numbers given in the KCS Standard Load Table indicate the equivalent K-Series joist of the same depth to be used for determination of the number of bridging rows, the size of horizontal bridging, and the need for erection stability bridging. While the need for erection stability bridging (diagonal bridging with bolted connections at the chords and intersections), can be determined from the **RED** shaded portion of the Standard Load Table, Open Web Steel Joists, K-Series, for convenience the KCS Load Table also includes a column for erection stability bridging. Where the span of the KCS Joist designation exceeds the length in ft. (mm) listed, the row of bridging nearest the joist midspan shall be erection stability bridging. Where “NA” is listed in the column, the KCS Joist designation does not require bolted diagonal erection bridging regardless of span.

For the proper handling of concentrated and/or varying loads, see Section 2.4 in the Code of Standard Practice for Steel Joists and Joist Girders.

ASD

STANDARD LOAD TABLE FOR KCS OPEN WEB STEEL JOISTS							
Based on a 50 ksi Maximum Yield Strength							
JOIST DESIGNATION	DEPTH (in.)	MOMENT CAPACITY (k-in.)	SHEAR CAPACITY* (lbs)	APPROX. WEIGHT** (lbs/ft.)	GROSS MOMENT OF INERTIA ($in.^4$)	ERECTION STABILITY BRIDGING REQ'D (ft.)	BRIDGING TABLE SECTION NUMBER
10KCS1	10	172	2000	6.0	29	NA	1
10KCS2	10	225	2500	7.5	37	NA	1
10KCS3	10	296	3000	10.0	47	NA	1
12KCS1	12	209	2400	6.0	43	NA	3
12KCS2	12	274	3000	8.0	55	NA	5
12KCS3	12	362	3500	10.0	71	NA	5
14KCS1	14	247	2900	6.5	59	NA	4
14KCS2	14	324	3400	8.0	77	NA	6
14KCS3	14	428	3900	10.0	99	NA	6
16KCS2	16	349	4000	8.5	99	NA	6
16KCS3	16	470	4800	10.5	128	NA	9
16KCS4	16	720	5300	14.5	192	NA	9
16KCS5	16	934	5800	18.0	245	NA	9
18KCS2	18	395	4700	9.0	127	35-0	6
18KCS3	18	532	5200	11.0	164	NA	9
18KCS4	18	817	5700	15.0	247	NA	10
18KCS5	18	1062	6200	18.5	316	NA	10
20KCS2	20	442	5200	9.5	159	36-0	6
20KCS3	20	595	6000	11.5	205	39-0	9
20KCS4	20	914	7900	16.5	308	NA	10
20KCS5	20	1191	8400	20.0	396	NA	10
22KCS2	22	488	5900	10.0	194	36-0	6
22KCS3	22	658	6600	12.5	251	40-0	9
22KCS4	22	1012	7900	16.5	377	NA	11
22KCS5	22	1319	8600	20.5	485	NA	11
24KCS2	24	534	6300	10.0	232	39-0	6
24KCS3	24	720	7200	12.5	301	44-0	9
24KCS4	24	1108	8400	16.5	453	NA	12
24KCS5	24	1448	8900	20.5	584	NA	12
26KCS2	26	580	6600	10.0	274	39-0	6
26KCS3	26	783	7800	12.5	355	44-0	9
26KCS4	26	1206	8500	16.5	536	NA	12
26KCS5	26	1576	9200	20.5	691	NA	12
28KCS2	28	626	6900	10.5	320	40-0	6
28KCS3	28	846	8000	12.5	414	45-0	9
28KCS4	28	1303	8500	16.5	626	53-0	12
28KCS5	28	1704	9200	20.5	808	53-0	12
30KCS3	30	908	8000	13.0	478	45-0	9
30KCS4	30	1400	8500	16.5	722	54-0	12
30KCS5	30	1833	9200	21.0	934	54-0	12

*Maximum uniformly distributed load capacity is 550 plf and single concentrated load cannot exceed shear capacity
**Does not include accessories

ASD

METRIC LOAD TABLE FOR KCS OPEN WEB STEEL JOISTS							
Based on 345 MPa Maximum Yield Strength							
JOIST DESIGNATION	DEPTH (mm)	MOMENT CAPACITY (kN-m)	SHEAR CAPACITY* (kN)	APPROX. WEIGHT** (kN/m)	GROSS MOMENT OF INERTIA (cm^4)	ERECTION STABILITY BRIDGING REQ'D (mm)	BRIDGING TABLE SECTION NUMBER
10KCS1	254	19.4	8.8	0.09	1200	NA	1
10KCS2	254	25.4	11.1	0.11	1540	NA	1
10KCS3	254	33.4	13.3	0.15	1950	NA	1
12KCS1	305	23.6	10.6	0.09	1780	NA	3
12KCS2	305	31.0	13.3	0.12	2280	NA	5
12KCS3	305	40.9	15.5	0.15	2950	NA	5
14KCS1	356	27.9	12.8	0.09	2450	NA	4
14KCS2	356	36.6	15.1	0.12	3200	NA	6
14KCS3	356	48.4	17.3	0.15	4120	NA	6
16KCS2	406	39.4	17.7	0.12	4120	NA	6
16KCS3	406	53.1	21.3	0.15	5320	NA	9
16KCS4	406	81.3	23.5	0.21	7990	NA	9
16KCS5	406	105.5	25.7	0.26	10190	NA	9
18KCS2	457	44.6	20.9	0.13	5280	10668	6
18KCS3	457	60.1	23.1	0.16	6820	NA	9
18KCS4	457	92.3	25.3	0.22	10280	NA	10
18KCS5	457	120.0	27.5	0.27	13150	NA	10
20KCS2	508	49.9	23.1	0.14	6610	10973	6
20KCS3	508	67.2	26.6	0.17	8530	11887	9
20KCS4	508	103.3	35.1	0.24	12810	NA	10
20KCS5	508	134.6	37.3	0.29	16480	NA	10
22KCS2	559	55.1	26.2	0.15	8070	10973	6
22KCS3	559	74.3	29.3	0.18	10440	12192	9
22KCS4	559	114.3	35.1	0.24	15690	NA	11
22KCS5	559	149.0	38.2	0.30	20180	NA	11
24KCS2	610	60.3	28.0	0.15	9650	11887	6
24KCS3	610	81.3	32.0	0.18	12520	13411	9
24KCS4	610	125.2	37.3	0.24	18850	NA	12
24KCS5	610	163.6	39.5	0.30	24300	NA	12
26KCS2	660	65.5	29.3	0.15	11400	11887	6
26KCS3	660	88.5	34.6	0.18	14770	13411	9
26KCS4	660	136.3	37.8	0.24	22310	NA	12
26KCS5	660	178.1	40.9	0.30	28760	NA	12
28KCS2	711	70.7	30.6	0.15	13310	12192	6
28KCS3	711	95.6	35.5	0.18	17230	13716	9
28KCS4	711	147.2	37.8	0.24	26050	16154	12
28KCS5	711	192.5	40.9	0.30	33630	16154	12
30KCS3	762	102.6	35.5	0.19	19890	13716	9
30KCS4	762	158.2	37.8	0.24	30050	16459	12
30KCS5	762	207.1	40.9	0.31	38870	16459	12

*Maximum uniformly distributed load capacity is 8.02 kN/m and single concentrated load cannot exceed shear capacity
**Does not include accessories

ECONOMY LOAD TABLES

OPEN WEB STEEL JOISTS, K-SERIES

Based on a 50 ksi (345 MPa) Maximum Yield Strength
Adopted by the Steel Joist Institute November 4, 1985
Revised to May 18, 2010 – Effective December 31, 2010

The tables on the following pages are provided as an aid to the designer in selecting the most economical K-Series Joists for the loads and spans required. Although considerable care has been taken in developing this chart, it must be realized that each joist manufacturer has his own unique cost; consequently, the Steel Joist Institute cannot guaranty the accuracy of this Table.

The K-Series Joists are arranged in accordance with their weight per foot/millimeter; where two or more joists weigh the same, they are arranged according to their depth.

To utilize these tables, determine the span (ft/mm) and load (plf/kN/M) required; go to the required span in the left hand column, then read across until a load equal to or greater than the required load is reached. The first joist that satisfies this loading is the most economical joist for those conditions. If this joist is too deep or too shallow, or does not satisfy the deflection limitations, continue on horizontally to the right until a joist is found that satisfies the depth requirements as well as the load and deflection requirements.

ASD EXAMPLE (in U.S. Customary Units):

Floor joists @ 2'-6" on center, supporting a structural concrete slab. (Section 5.10 of the K-Series Specifications limits the deflection due to the design live load to 1/360 of the span).

Span = 30'- 0"

Maximum joist depth allowed = 20”

DL = 48 psf (includes joist weight)
LL = 100 psf
TL = 148 psf

W_{TL} = 148 x 2.5 = 370 plf
W_{LL}= 100 x 2.5 = 250 plf

A 22K6 at a span of 30 feet can carry 371 plf of Total Load and possesses a RED figure of 266 plf (RED figure load produces a deflection of approximately 1/360 of span). However, it exceeds the maximum depth limitation of 20 inches. A 20K7 fulfills the Total Load requirement but possesses a RED figure of only 242 plf. It is then found that a 20K9 is the most economical joist that satisfies all the requirements of Total Load, Live Load deflection, and maximum depth limitation.

Where the joist span exceeds the unshaded area of the table, the row of bridging nearest the midspan shall be diagonal bridging with bolted connections at chords and midspan.

LRFD EXAMPLE (in U.S. Customary Units):

Floor joists @ 2'-6" on center, supporting a structural concrete slab. (Section 5.10 of the K-Series Specifications limits the deflection due to the design live load to 1/360 of the span).

Span = 30'- 0"

Load factors per ASCE 7-Minimum Design Loads for Buildings and Other Structures

Maximum joist depth allowed = 20"

Factored DL = 48 x 1.2 = 58 psf (includes joist weight)
Factored LL = 100 x 1.6 = 160 psf
Factored TL = 218 psf

Factored W_{TL} = 218 x 2.5 = 545 plf
Unfactored W_{LL} = 100 x 2.5 = 250 plf

A 22K6 at a span of 30 feet can carry 566 plf of Factored Total Load and possesses a RED figure of 266 plf (RED figure load produces a deflection of approximately of 1/360 of span). However, it exceeds the maximum depth limitation of 20 inches. A 20K7 fulfills the Factored Total Load requirement but possesses a RED figure of only 242 plf. It is then found that a 20K9 is the most economical joist that satisfies all the requirements of Factored Total Load, Live Load deflection, and maximum depth limitation.

Where the joist span exceeds the unshaded area of the table, the row of bridging nearest the midspan shall be diagonal bridging with bolted connections at chords and midspan.

LRFD

LRFD K-SERIES ECONOMY TABLE - STANDARD UNITS

Joist Designation	10K1	12K1	14K1	16K2	12K3	14K3	16K3	18K3	20K3	14K4	16K4	12K5	18K4	20K4	22K4	16K5
Depth (In.)	10	12	14	16	12	14	16	18	20	14	16	12	18	20	22	16
Approx. Wt. (lbs./ft)	5.0	5.0	5.2	5.5	5.7	6.0	6.3	6.4	6.5	6.7	7.0	7.1	7.2	7.2	7.3	7.5
Span (ft)																
10	825 550															
11	825 542															
12	825 455	825 550			825 550							825 550				
13	718 363	825 510			825 510							825 510				
14	618 289	750 425	825 550		825 463	825 550				825 550		825 463				
15	537 234	651 344	766 475		814 428	825 507				825 507		825 434				
16	469 192	570 282	672 390	825 550	714 351	825 467	825 550			825 467	825 550	825 396				825 550
17	415 159	504 234	592 324	768 488	630 291	742 404	825 526			825 443	825 526	825 366				825 526
18	369 134	448 197	528 272	684 409	561 245	661 339	762 456	825 550		795 397	825 490	760 317	825 550			825 490
19	331 113	402 167	472 230	612 347	502 207	592 287	682 386	771 494	825 550	712 336	820 452	681 269	825 523	825 550		825 455
20	298 97	361 142	426 197	552 297	453 177	534 246	615 330	694 423	775 517	642 287	739 386	613 230	825 490	825 550		825 426
21		327 123	385 170	499 255	409 153	483 212	556 285	630 364	702 453	582 248	670 333	555 198	759 426	825 520	825 550	754 373
22		298 106	351 147	454 222	373 132	439 184	505 247	573 316	639 393	529 215	609 289	505 172	690 370	771 461	825 548	687 323
23		271 93	321 128	415 194	340 116	402 160	462 216	523 276	583 344	483 188	556 252	462 150	630 323	703 402	777 491	627 282
24		249 81	294 113	381 170	312 101	367 141	424 189	480 242	535 302	442 165	510 221	423 132	577 284	645 353	712 431	576 248
25			270 100	351 150		339 124	390 167	441 214	493 266	408 145	469 195		532 250	594 312	657 381	529 219
26			249 88	324 133		313 110	360 148	408 190	456 236	376 129	433 173		492 222	549 277	606 338	489 194
27			231 79	300 119		289 98	334 132	378 169	421 211	349 115	402 155		454 198	508 247	561 301	453 173
28			214 70	279 106		270 88	310 118	351 151	391 189	324 103	373 138		423 177	472 221	522 270	421 155
29				259 95			289 106	327 136	364 170		232 124		394 159	439 199	486 242	391 139
30				241 86			270 96	304 123	340 153		216 112		367 144	411 179	453 219	366 126
31				226 78			252 87	285 111	318 138		203 101		343 130	384 162	424 198	342 114
32				213 71			237 79	267 101	298 126		190 92		322 118	360 147	397 180	321 103
33								252 92	280 114				303 108	339 134	373 164	
34								237 84	264 105				285 98	318 122	352 149	
35								223 77	249 96				268 90	300 112	331 137	
36								211 70	235 88				253 82	283 103	313 126	
37									222 81					268 95	297 116	
38									211 74					255 87	280 107	
39									199 69					241 81	267 98	
40									190 64					229 75	253 91	
41															241 85	
42															229 79	
43															219 73	
44															208 68	

LRFD

LRFD K-SERIES ECONOMY TABLE - STANDARD UNITS

Joist Designation	14K6	18K5	20K5	22K5	24K4	24K5	16K6	26K5	18K6	20K6	22K6	24K6	16K7	26K6	18K7	20K7
Depth (In).	14	18	20	22	24	24	16	26	18	20	22	24	16	26	18	20
Approx. Wt. (lbs./ft)	7.7	7.7	7.7	7.7	7.8	7.9	8.1	8.1	8.4	8.4	8.5	8.5	8.6	8.6	8.9	8.9
Span (ft)																
14	825 550															
15	825 507															
16	825 467						825 550						825 550			
17	825 443						825 526						825 526			
18	825 408	825 550					825 490		825 550				825 490		825 550	
19	825 383	825 523	825 550				825 455		825 523	825 550			825 455		825 523	825 550
20	787 347	825 490	825 550				825 426		825 490	825 550			825 426		825 490	825 550
21	712 299	825 460	825 520	825 550			822 405		825 460	825 520	825 550		825 406		825 460	825 520
22	648 259	777 414	825 490	825 548			747 351		825 438	825 490	825 548		825 385		825 438	825 490
23	592 226	709 362	793 451	825 518	825 550	825 550	682 307		774 393	825 468	825 518	825 550	760 339		825 418	825 468
24	543 199	651 318	727 396	804 483	780 516	825 544	627 269		709 345	792 430	825 495	825 544	697 298		789 382	825 448
25	501 175	600 281	669 350	739 427	718 456	810 511	576 238	825 550	652 305	729 380	805 464	825 520	642 263	825 550	727 337	811 421
26	462 156	553 249	618 310	682 379	663 405	748 453	532 211	813 535	603 271	673 337	744 411	814 493	592 233	825 541	672 299	750 373
27	427 139	513 222	573 277	633 337	615 361	693 404	493 188	753 477	558 241	624 301	688 367	754 439	549 208	820 519	622 267	694 333
28	397 124	477 199	532 248	588 302	571 323	643 362	459 168	699 427	519 216	579 269	640 328	700 393	510 186	762 464	577 239	645 298
29		444 179	495 223	547 272	531 290	600 325	427 151	651 384	483 194	540 242	597 295	652 354	475 167	709 417	538 215	601 268
30		414 161	462 201	511 245	496 262	559 293	399 137	607 346	451 175	504 218	556 266	609 319	444 151	661 377	502 194	561 242
31		387 146	433 182	478 222	465 237	523 266	373 124	568 314	421 158	471 198	520 241	570 289	415 137	619 341	469 175	525 219
32		363 132	406 165	448 201	435 215	490 241	349 112	534 285	396 144	442 179	489 219	535 262	388 124	580 309	441 159	492 199
33		342 121	381 150	421 183	409 196	462 220		501 259	248 131	415 163	459 199	502 239		546 282	414 145	463 181
34		321 110	358 137	397 167	385 179	435 201		472 237	233 120	391 149	432 182	472 218		514 257	390 132	435 165
35		303 101	339 126	373 153	363 164	409 184		445 217	330 110	369 137	408 167	445 200		484 236	367 121	411 151
36		286 92	319 115	354 141	343 150	387 169		420 199	312 101	348 125	385 153	421 183		457 216	348 111	388 139
37			303 106	334 130	324 138	366 155		397 183		330 115	364 141	399 169		433 199		367 128
38			286 98	316 119	307 128	346 143		376 169		312 106	345 130	378 156		411 184		348 118
39			271 90	300 110	292 118	328 132		357 156		297 98	327 120	358 144		390 170		330 109
40			258 84	285 102	277 109	312 122		340 145		282 91	310 111	340 133		370 157		313 101
41				271 95	264 101	297 114		322 134			295 103	324 124		352 146		
42				259 88	252 94	283 106		307 125			282 96	309 115		336 136		
43				247 82	240 88	270 98		294 116			268 89	294 107		319 126		
44				235 76	229 82	258 92		280 108			256 83	280 100		306 118		
45					219 76	246 86		268 101				268 93		291 110		
46					208 71	235 80		256 95				256 87		279 103		
47					199 67	225 75		246 89				246 82		267 96		
48					192 63	216 70		235 83				235 77		256 90		
49								225 78						246 85		
50								216 73						235 80		
51								208 69						226 75		
52								199 65						217 71		

LRFD

LRFD K-SERIES ECONOMY TABLE - STANDARD UNITS

Joist Designation	28K6	22K7	24K7	26K7	28K7	24K8	30K7	26K8	28K8	16K9	30K8	18K9	20K9	22K9	24K9	26K9
Depth (In).	28	22	24	26	28	24	30	26	28	16	30	18	20	22	24	26
Approx. Wt (lbs./ft.)	8.9	9.0	9.0	9.0	9.2	9.4	9.6	9.7	9.8	10.0	10.0	10.1	10.1	10.2	10.3	10.4
Span (ft.)																
16										825 550						
17										825 526						
18										825 490		825 550				
19										825 455		825 523	825 550			
20										825 426		825 490	825 550			
21		825 550								825 406		825 460	825 520	825 550		
22		825 548								825 385		825 438	825 490	825 548		
23		825 518	825 550			825 550				825 363		825 418	825 468	825 518	825 550	
24		825 495	825 544			825 544				825 346		825 396	825 448	825 495	825 544	
25		825 474	825 520	825 550		825 520		825 550		771 311		825 377	825 426	825 474	825 520	825 550
26		825 454	825 499	825 541		825 499		825 541		711 276		807 354	825 405	825 454	825 499	825 541
27	825 550	768 406	825 479	825 522	825 550	825 479		825 522	825 550	658 246		747 315	825 389	825 432	825 479	825 522
28	822 541	712 364	781 436	825 501	825 543	825 456		825 501	825 543	612 220		694 282	775 353	825 413	825 456	825 501
29	766 486	664 327	727 392	790 463	825 522	804 429	825 550	825 479	825 522	570 198	825 550	646 254	723 317	798 387	825 436	825 479
30	715 439	619 295	679 353	738 417	796 486	750 387	825 543	816 457	825 500	532 178	825 543	603 229	675 286	745 349	816 419	825 459
31	669 397	580 267	636 320	690 378	745 440	702 350	801 508	763 413	825 480	498 161	825 520	564 207	631 259	697 316	765 379	825 444
32	627 361	544 242	595 290	648 343	699 400	658 318	751 461	715 375	772 438	466 147	823 500	529 188	592 235	654 287	717 344	778 407
33	589 329	511 221	559 265	609 312	657 364	619 289	706 420	672 342	726 399		780 460	498 171	556 214	615 261	673 313	732 370
34	555 300	481 202	526 242	573 285	618 333	582 264	664 384	633 312	684 364		735 420	468 156	523 195	579 239	634 286	688 338
35	523 275	454 185	496 221	540 261	583 305	549 242	627 351	597 286	645 333		693 384	441 143	493 179	546 219	598 262	649 310
36	495 252	429 169	469 203	510 240	550 280	519 222	592 323	564 263	609 306		654 353	417 132	466 164	516 201	565 241	613 284
37	468 232	406 156	444 187	483 221	522 257	490 205	559 297	534 242	576 282		619 325		441 151	487 185	534 222	580 262
38	444 214	384 144	421 172	457 204	493 237	465 189	531 274	505 223	546 260		586 300		418 139	462 170	507 204	550 241
39	420 198	364 133	399 159	433 188	469 219	441 174	504 253	480 206	519 240		556 277		397 129	438 157	480 189	522 223
40	399 183	346 123	379 148	412 174	445 203	420 161	478 234	456 191	492 222		529 256		376 119	417 146	456 175	496 207
41	379 170	330 114	361 137	393 162	424 189	399 150	454 217	433 177	468 206		502 238			396 135	435 162	472 192
42	361 158	313 106	343 127	373 150	403 175	379 139	433 202	412 164	445 192		480 221			378 126	414 151	450 178
43	345 147	300 99	328 118	357 140	385 163	363 130	414 188	394 153	426 179		457 206			360 117	394 140	429 166
44	330 137	286 92	313 110	340 131	367 152	346 121	394 176	376 143	406 167		436 192			343 109	376 131	409 155
45	315 128		298 103	325 122	351 142	330 113	376 164	360 133	388 156		417 179				360 122	391 145
46	301 120		286 97	310 114	336 133	316 106	361 153	343 125	372 146		399 168				345 114	375 135
47	288 112		274 90	298 107	321 125	303 99	345 144	328 117	355 136		382 157				330 107	358 127
48	276 105		262 85	285 100	309 117	291 93	331 135	315 110	340 128		366 148				316 101	343 119
49	265 99			274 94	295 110		318 127	303 103	327 120		351 139					330 112
50	255 93			262 89	283 103		304 119	291 97	313 113		337 130					316 105
51	244 88			252 83	273 97		292 112	279 91	301 106		324 123					304 99
52	235 83			243 79	262 92		282 106	268 86	289 100		312 116					292 93
53	226 78				252 87		271 100		279 95		300 109					
54	217 74				243 82		261 94		268 89		288 103					
55	210 70				234 77		252 89		259 85		277 98					
56	202 66				226 73		243 84		249 80		268 92					
57							234 80				259 88					
58							226 76				250 83					
59							219 72				241 79					
60							211 69				234 75					

LRFD

LRFD K-SERIES ECONOMY TABLE - STANDARD UNITS

Joist Designation	28K9	30K9	18K10	20K10	22K10	24K10	26K10	28K10	22K11	30K10	30K11	24K12	26K12	28K12	30K12
Depth (In.)	28	30	18	20	22	24	26	28	22	30	30	24	26	28	30
Approx. Wt. (lbs/ft)	10.5	10.6	11.6	11.6	11.7	11.7	11.8	11.8	11.9	11.9	13.3	13.5	13.7	14.5	15.0
Span (ft.)															
18			825 550												
19			825 523	825 550											
20			825 490	825 550											
21			825 460	825 520	825 550				825 550						
22			825 438	825 490	825 548				825 548						
23			825 418	825 468	825 518	825 550			825 518			825 550			
24			825 396	825 448	825 495	825 544			825 495			825 544			
25			825 377	825 426	825 474	825 520	825 550		825 474			825 520	825 550		
26			825 361	825 405	825 454	825 499	825 541		825 454			825 499	825 541		
27	825 550		825 347	825 389	825 432	825 479	825 522	825 550	825 432			825 479	825 522	825 550	
28	825 543		822 331	825 375	825 413	825 456	825 501	825 543	825 413			825 456	825 501	825 543	
29	825 522	825 550	766 298	825 359	825 399	825 436	825 479	825 522	825 399	825 550	825 550	825 436	825 479	825 522	825 550
30	825 500	825 543	715 269	799 336	825 385	825 422	825 459	825 500	825 385	825 543	825 543	825 422	825 459	825 500	825 543
31	825 480	825 520	669 243	748 304	825 369	825 410	825 444	825 480	825 369	825 520	825 520	825 410	825 444	825 480	825 520
32	823 463	823 500	627 221	702 276	775 337	823 393	823 431	823 463	823 355	823 500	823 500	823 393	823 431	823 463	823 500
33	790 432	798 468	589 201	660 251	729 307	798 368	798 404	798 435	798 334	798 468	798 468	798 368	798 404	798 435	798 468
34	744 395	774 441	555 184	621 229	687 280	753 337	774 378	774 410	774 314	774 441	774 441	774 344	774 378	774 410	774 441
35	702 361	751 415	523 168	585 210	648 257	709 308	751 356	751 389	741 292	751 415	751 415	751 324	751 356	751 389	751 415
36	663 332	712 383	495 154	553 193	612 236	670 283	729 334	730 366	700 269	730 392	730 392	730 306	730 334	730 366	730 392
37	627 305	673 352		523 178	579 217	634 260	690 308	711 344	663 247	711 374	711 374	711 290	711 315	711 344	711 374
38	594 282	639 325		496 164	549 200	601 240	654 284	691 325	628 228	691 353	691 353	691 275	691 299	691 325	691 353
39	564 260	606 300		471 151	520 185	570 222	619 262	670 306	595 211	673 333	673 333	673 261	673 283	673 308	673 333
40	535 241	576 278		447 140	495 171	541 206	589 243	636 284	565 195	657 315	657 315	657 247	657 269	657 291	657 315
41	510 224	547 258			471 159	516 191	561 225	606 263	538 181	640 300	640 300	640 235	640 256	640 277	640 300
42	486 208	522 240			448 148	490 177	534 210	576 245	513 168	619 282	625 284	625 224	625 244	625 264	625 284
43	463 194	498 223			427 138	468 165	508 195	550 228	489 157	591 263	610 270	609 213	610 232	610 252	610 270
44	442 181	475 208			408 128	447 154	486 182	525 212	466 146	564 245	597 258	580 199	597 222	597 240	597 258
45	423 169	454 195				427 144	465 170	501 198		538 229	583 246	555 185	583 212	583 229	583 246
46	405 158	435 182				408 135	444 159	480 186		516 214	570 236	531 174	570 203	570 219	570 236
47	387 148	415 171				391 126	426 149	459 174		493 201	558 226	508 163	553 192	558 210	558 226
48	370 139	399 160				375 118	408 140	441 163		472 188	543 215	487 153	529 180	547 201	547 216
49	355 130	382 150					391 131	423 153		454 177	520 202		508 169	535 193	535 207
50	342 123	367 141					375 124	405 144		436 166	499 190		487 159	525 185	525 199
51	328 115	352 133					361 116	390 136		418 157	480 179		469 150	507 175	514 192
52	315 109	339 126					346 110	375 128		402 148	462 169		451 142	487 165	504 184
53	304 103	327 119						360 121		387 140	444 159			469 156	495 177
54	292 97	313 112						348 114		373 132	427 150			451 147	486 170
55	282 92	303 106						334 108		360 125	412 142			435 139	468 161
56	271 87	292 100						322 102		346 118	397 135			420 132	451 153
57		282 95								334 112	384 128				435 145
58		271 90								322 106	370 121				420 137
59		262 86								312 101	358 115				406 130
60		253 81								301 96	346 109				393 124

LRFD

LRFD K-SERIES ECONOMY TABLE - METRIC UNITS

Joist Designation	10K1	12K1	14K1	16K2	12K3	14K3	16K3	18K3	20K3	14K4	16K4	12K5	18K4	20K4	22K4	16K5
Depth (mm)	254	305	356	406	305	356	406	457	508	356	406	305	457	508	559	406
Approx. Wt. (kN/m)	0.07	0.07	0.08	0.08	0.08	0.09	0.09	0.09	0.09	0.10	0.10	0.10	0.11	0.11	0.11	0.11
Span (mm)																
3048	12.03 8.02															
3353	12.03 7.90															
3658	12.03 6.64	12.03 8.02			12.03 8.02							12.03 8.02				
3962	10.48 5.29	12.03 7.44			12.03 7.44							12.03 7.44				
4267	9.01 4.21	10.94 6.20	12.03 8.02		12.03 6.75	12.03 8.02				12.03 8.02		12.03 6.75				
4572	7.83 3.41	9.50 5.02	11.18 6.93		11.88 6.24	12.03 7.39				12.03 7.39		12.03 6.33				
4877	6.85 2.80	8.31 4.11	9.80 5.69	12.03 8.02	10.42 5.12	12.03 6.81	12.03 8.02			12.03 6.81	12.03 8.02	12.03 5.77				12.03 8.02
5182	6.06 2.32	7.35 3.41	8.64 4.72	11.20 7.12	9.19 4.24	10.83 5.89	12.03 7.67			12.03 6.46	12.03 7.67	12.03 5.34				12.03 7.67
5486	5.38 1.95	6.54 2.87	7.70 3.96	9.98 5.96	8.18 3.57	9.65 4.94	11.12 6.65	12.03 8.02		11.60 5.79	12.03 7.15	11.09 4.62	12.03 8.02			12.03 7.15
5791	4.83 1.64	5.86 2.43	6.89 3.35	8.93 5.06	7.33 3.02	8.64 4.18	9.96 5.63	11.25 7.20	12.03 8.02	10.39 4.90	11.97 6.59	9.93 3.92	12.03 7.63	12.03 8.02		12.03 6.64
6096	4.35 1.41	5.27 2.07	6.21 2.87	8.05 4.33	6.61 2.58	7.79 3.59	8.97 4.81	10.13 6.17	11.31 7.54	9.36 4.18	10.79 5.63	8.95 3.35	12.03 7.15	12.03 8.02		12.03 6.21
6401		4.77 1.79	5.62 2.48	7.28 3.72	5.97 2.23	7.04 3.09	8.12 4.15	9.19 5.31	10.24 6.61	8.49 3.61	9.78 4.85	8.09 2.88	11.07 6.21	12.03 7.58	12.03 8.02	11.01 5.44
6706		4.35 1.54	5.12 2.14	6.63 3.23	5.45 1.92	6.41 2.68	7.37 3.60	8.36 4.61	9.32 5.73	7.72 3.13	8.88 4.21	7.37 2.51	10.06 5.39	11.25 6.72	12.03 7.99	10.02 4.71
7010		3.96 1.35	4.68 1.86	6.06 2.83	4.96 1.69	5.86 2.33	6.74 3.15	7.63 4.02	8.51 5.02	7.04 2.74	8.12 3.67	6.74 2.18	9.19 4.71	10.26 5.86	11.33 7.16	9.15 4.11
7315		3.63 1.18	4.29 1.64	5.56 2.48	4.55 1.47	5.36 2.05	6.19 2.75	7.00 3.53	7.81 4.40	6.45 2.40	7.44 3.22	6.17 1.92	8.42 4.14	9.41 5.15	10.39 6.28	8.40 3.61
7620			3.94 1.45	5.12 2.18		4.94 1.80	5.69 2.43	6.43 3.12	7.20 3.88	5.95 2.11	6.85 2.84		7.77 3.64	8.66 4.55	9.58 5.56	7.72 3.19
7925			3.63 1.28	4.72 1.94		4.57 1.60	5.25 2.15	5.95 2.77	6.65 3.44	5.49 1.88	6.32 2.52		7.18 3.23	8.01 4.04	8.84 4.93	7.13 2.83
8230			3.37 1.15	4.37 1.73		4.22 1.43	4.88 1.92	5.51 2.46	6.15 3.07	5.10 1.67	5.86 2.26		6.63 2.88	7.42 3.60	8.18 4.39	6.61 2.52
8534			3.13 1.02	4.07 1.54		3.94 1.28	4.53 1.72	5.12 2.20	5.71 2.75	4.72 1.50	5.45 2.01		6.17 2.58	6.89 3.22	7.61 3.94	6.15 2.26
8839				3.78 1.38			4.22 1.54	4.77 1.98	5.31 2.48		5.07 1.80		5.75 2.32	6.41 2.90	7.09 3.53	5.71 2.02
9144				3.52 1.25			3.94 1.40	4.44 1.79	4.96 2.23		4.72 1.63		5.36 2.10	5.99 2.61	6.61 3.19	5.34 1.83
9449				3.30 1.13			3.67 1.26	4.15 1.61	4.64 2.01		4.44 1.47		5.01 1.89	5.60 2.36	6.19 2.88	4.99 1.66
9754				3.10 1.03			3.45 1.15	3.89 1.47	4.35 1.83		4.15 1.34		4.70 1.72	5.25 2.14	5.80 2.62	4.68 1.50
10058								3.67 1.34	4.09 1.66				4.42 1.57	4.94 1.95	5.45 2.39	
10363								3.45 1.22	3.85 1.53				4.15 1.43	4.64 1.78	5.14 2.17	
10668								3.26 1.12	3.63 1.40				3.91 1.31	4.37 1.63	4.83 1.99	
10973								3.08 1.02	3.43 1.28				3.69 1.19	4.13 1.50	4.57 1.83	
11278									3.23 1.18					3.91 1.38	4.33 1.69	
11582									3.08 1.07					3.72 1.26	4.09 1.56	
11887									2.91 1.00					3.52 1.18	3.89 1.43	
12192									2.78 0.93					3.34 1.09	3.69 1.32	
12497															3.52 1.24	
12802															3.34 1.15	
13106															3.19 1.06	
13411															3.04 0.99	

LRFD

LRFD K-SERIES ECONOMY TABLE - METRIC UNITS

Joist Designation	14K6	18K5	20K5	22K5	24K4	24K5	16K6	26K5	18K6	20K6	22K6	24K6	16K7	26K6	18K7	20K7
Depth (mm)	356	457	508	559	610	610	406	660	457	508	559	610	406	660	457	508
Approx. Wt. (kN/m)	0.11	0.11	0.11	0.11	0.11	0.12	0.12	0.12	0.12	0.12	0.12	0.12	0.13	0.13	0.13	0.13
Span (mm)																
4267	12.03 8.02															
4572	12.03 7.39															
4877	12.03 6.81						12.03 8.02						12.03 8.02			
5182	12.03 6.46						12.03 7.67						12.03 7.67			
5486	12.03 5.95	12.03 8.02					12.03 7.15		12.03 8.02				12.03 7.15		12.03 8.02	
5791	12.03 5.58	12.03 7.63	12.03 8.02				12.03 6.64		12.03 7.63	12.03 8.02			12.03 6.64		12.03 7.63	12.03 8.02
6096	11.49 5.06	12.03 7.15	12.03 8.02				12.03 6.21		12.03 7.15	12.03 8.02			12.03 6.21		12.03 7.15	12.03 8.02
6401	10.39 4.36	12.03 6.71	12.03 7.58	12.03 8.02			11.99 5.91		12.03 6.71	12.03 7.58	12.03 8.02		12.03 5.92		12.03 6.71	12.03 7.58
6706	9.45 3.77	11.33 6.04	12.03 7.15	12.03 7.99			10.90 5.12		12.03 6.39	12.03 7.15	12.03 7.99		12.03 5.61		12.03 6.39	12.03 7.15
7010	8.64 3.29	10.35 5.28	11.58 6.58	12.03 7.55	12.03 8.02	12.03 8.02	9.96 4.48		11.29 5.73	12.03 6.82	12.03 7.55	12.03 8.02	11.09 4.94		12.03 6.10	12.03 6.82
7315	7.92 2.90	9.50 4.64	10.61 5.77	11.73 7.04	11.38 7.53	12.03 7.93	9.15 3.92		10.35 5.03	11.55 6.27	12.03 7.22	12.03 7.93	10.17 4.34		11.51 5.57	12.03 6.53
7620	7.31 2.55	8.75 4.10	9.76 5.10	10.79 6.23	10.48 6.65	11.82 7.45	8.40 3.47	12.03 8.02	9.52 4.45	10.63 5.54	11.75 6.77	12.03 7.58	9.36 3.83	12.03 8.02	10.61 4.91	11.84 6.14
7925	6.74 2.27	8.07 3.63	9.01 4.52	9.96 5.53	9.67 5.91	10.92 6.61	7.77 3.07	11.86 7.80	8.80 3.95	9.82 4.91	10.85 5.99	11.88 7.19	8.64 3.40	12.03 7.89	9.80 4.36	10.94 5.44
8230	6.23 2.02	7.48 3.23	8.36 4.04	9.23 4.91	8.97 5.26	10.11 5.89	7.20 2.74	10.98 6.96	8.14 3.51	9.10 4.39	10.04 5.35	11.01 6.40	8.01 3.03	11.97 7.57	9.08 3.89	10.13 4.85
8534	5.80 1.80	6.96 2.90	7.77 3.61	8.58 4.40	8.34 4.71	9.39 5.28	6.69 2.45	10.20 6.23	7.57 3.15	8.44 3.92	9.34 4.78	10.22 5.73	7.44 2.71	11.12 6.77	8.42 3.48	9.41 4.34
8839		6.47 2.61	7.22 3.25	7.99 3.96	7.74 4.23	8.75 4.74	6.23 2.20	9.50 5.60	7.04 2.83	7.88 3.53	8.71 4.30	9.52 5.16	6.93 2.43	10.35 6.08	7.85 3.13	8.77 3.91
9144		6.04 2.34	6.74 2.93	7.46 3.57	7.24 3.82	8.16 4.27	5.82 1.99	8.86 5.04	6.58 2.55	7.35 3.18	8.12 3.88	8.88 4.65	6.47 2.20	9.65 5.50	7.33 2.83	8.18 3.53
9449		5.64 2.13	6.32 2.65	6.98 3.23	6.78 3.45	7.63 3.88	5.45 1.80	8.29 4.58	6.15 2.30	6.87 2.88	7.59 3.51	8.31 4.21	6.06 1.99	9.04 4.97	6.85 2.55	7.66 3.19
9754		5.29 1.92	5.93 2.40	6.54 2.93	6.34 3.13	7.15 3.51	5.10 1.63	7.79 4.15	5.77 2.10	6.45 2.61	7.13 3.19	7.81 3.82	5.66 1.80	8.47 4.50	6.43 2.32	7.18 2.90
10058		4.99 1.76	5.56 2.18	6.15 2.67	5.97 2.86	6.74 3.21		7.31 3.77	5.42 1.91	6.06 2.37	6.69 2.90	7.33 3.48		7.96 4.11	6.04 2.11	6.76 2.64
10363		4.68 1.60	5.23 1.99	5.80 2.43	5.62 2.61	6.34 2.93		6.89 3.45	5.10 1.75	5.71 2.17	6.30 2.65	6.89 3.18		7.50 3.75	5.69 1.92	6.34 2.40
10668		4.42 1.47	4.94 1.83	5.45 2.23	5.29 2.39	5.97 2.68		6.50 3.16	4.81 1.60	5.38 1.99	5.95 2.43	6.50 2.91		7.07 3.44	5.36 1.76	5.99 2.20
10973		4.18 1.34	4.66 1.67	5.16 2.05	5.01 2.18	5.64 2.46		6.12 2.90	4.55 1.47	5.07 1.82	5.62 2.23	6.15 2.67		6.67 3.15	5.07 1.61	5.66 2.02
11278			4.42 1.54	4.88 1.89	4.72 2.01	5.34 2.26		5.80 2.67		4.81 1.67	5.31 2.05	5.82 2.46		6.32 2.90		5.36 1.86
11582			4.18 1.43	4.61 1.73	4.48 1.86	5.05 2.08		5.49 2.46		4.55 1.54	5.03 1.89	5.51 2.27		5.99 2.68		5.07 1.72
11887			3.96 1.31	4.37 1.60	4.26 1.72	4.79 1.92		5.21 2.27		4.33 1.43	4.77 1.75	5.23 2.10		5.69 2.48		4.81 1.59
12192			3.76 1.22	4.15 1.48	4.04 1.59	4.55 1.78		4.96 2.11		4.11 1.32	4.53 1.61	4.96 1.94		5.40 2.29		4.57 1.47
12497				3.96 1.38	3.85 1.47	4.33 1.66		4.70 1.95			4.31 1.50	4.72 1.80		5.14 2.13		
12802				3.78 1.28	3.67 1.37	4.13 1.54		4.48 1.82			4.11 1.40	4.50 1.67		4.90 1.98		
13106				3.61 1.19	3.50 1.28	3.94 1.43		4.29 1.69			3.91 1.29	4.29 1.56		4.66 1.83		
13411				3.43 1.10	3.34 1.19	3.76 1.34		4.09 1.57			3.74 1.21	4.09 1.45		4.46 1.72		
13716					3.19 1.10	3.59 1.25		3.91 1.47				3.91 1.35		4.24 1.60		
14021					3.04 1.03	3.43 1.16		3.74 1.38				3.74 1.26		4.07 1.50		
14326					2.91 0.97	3.28 1.09		3.59 1.29				3.59 1.19		3.89 1.40		
14630					2.80 0.91	3.15 1.02		3.43 1.21				3.43 1.12		3.74 1.31		
14935								3.28 1.13						3.59 1.24		
15240								3.15 1.06						3.43 1.16		
15545								3.04 1.00						3.30 1.09		
15850								2.91 0.94						3.17 1.03		

LRFD

LRFD K-SERIES ECONOMY TABLE - METRIC UNITS

Joist Designation	28K6	22K7	24K7	26K7	28K7	24K8	30K7	26K8	28K8	16K9	30K8	18K9	20K9	22K9	24K9	26K9
Depth (mm)	711	559	610	660	711	610	762	660	711	406	762	457	508	559	610	660
Approx. Wt (kN/m)	0.13	0.13	0.13	0.13	0.13	0.14	0.14	0.14	0.14	0.15	0.15	0.15	0.15	0.15	0.15	0.15
Span (mm)																
4877										12.03 8.02						
5182										12.03 7.67						
5486										12.03 7.15		12.03 8.02				
5791										12.03 6.64		12.03 7.63	12.03 8.02			
6096										12.03 6.21		12.03 7.15	12.03 8.02			
6401		12.03 8.02								12.03 5.92		12.03 6.71	12.03 7.58	12.03 8.02		
6706		12.03 7.99								12.03 5.61		12.03 6.39	12.03 7.15	12.03 7.99		
7010		12.03 7.55	12.03 8.02			12.03 8.02				12.03 5.29		12.03 6.10	12.03 6.82	12.03 7.55	12.03 8.02	
7315		12.03 7.22	12.03 7.93			12.03 7.93				12.03 5.04		12.03 5.77	12.03 6.53	12.03 7.22	12.03 7.93	
7620		12.03 6.91	12.03 7.58	12.03 8.02		12.03 7.58		12.03 8.02		11.25 4.53		12.03 5.50	12.03 6.21	12.03 6.91	12.03 7.58	12.03 8.02
7925		12.03 6.62	12.03 7.28	12.03 7.89		12.03 7.28		12.03 7.89		10.37 4.02		11.77 5.16	12.03 5.91	12.03 6.62	12.03 7.28	12.03 7.89
8230	12.03 8.02	11.20 5.92	12.03 6.99	12.03 7.61	12.03 8.02	12.03 6.99		12.03 7.61	12.03 8.02	9.61 3.59		10.90 4.59	12.03 5.67	12.03 6.30	12.03 6.99	12.03 7.61
8534	11.99 7.89	10.39 5.31	11.40 6.36	12.03 7.31	12.03 7.92	12.03 6.65		12.03 7.31	12.03 7.92	8.93 3.21		10.13 4.11	11.31 5.15	12.03 6.02	12.03 6.65	12.03 7.31
8839	11.18 7.09	9.69 4.77	10.61 5.72	11.53 6.75	12.03 7.61	11.73 6.26	12.03 8.02	12.03 6.99	12.03 7.61	8.31 2.88	12.03 8.02	9.43 3.70	10.55 4.62	11.64 5.64	12.03 6.36	12.03 6.99
9144	10.44 6.40	9.04 4.30	9.91 5.15	10.77 6.08	11.62 7.09	10.94 5.64	12.03 7.92	11.90 6.66	12.03 7.29	7.77 2.59	12.03 7.92	8.80 3.34	9.85 4.17	10.87 5.09	11.90 6.11	12.03 6.69
9449	9.76 5.79	8.47 3.89	9.28 4.67	10.06 5.51	10.87 6.42	10.24 5.10	11.68 7.41	11.14 6.02	12.03 7.00	7.26 2.34	12.03 7.58	8.23 3.02	9.21 3.77	10.17 4.61	11.16 5.53	12.03 6.47
9754	9.15 5.26	7.94 3.53	8.69 4.23	9.45 5.00	10.20 5.83	9.61 4.64	10.96 6.72	10.44 5.47	11.27 6.39	6.80 2.14	12.01 7.29	7.72 2.74	8.64 3.42	9.54 4.18	10.46 5.02	11.36 5.93
10058	8.60 4.80	7.46 3.22	8.16 3.86	8.88 4.55	9.58 5.31	9.04 4.21	10.31 6.12	9.80 4.99	10.59 5.82		11.38 6.71	7.26 2.49	8.12 3.12	8.97 3.80	9.82 4.56	10.68 5.39
10363	8.09 4.37	7.02 2.94	7.68 3.53	8.36 4.15	9.01 4.85	8.49 3.85	9.69 5.60	9.23 4.55	9.98 5.31		10.72 6.12	6.82 2.27	7.63 2.84	8.44 3.48	9.25 4.17	10.04 4.93
10668	7.63 4.01	6.63 2.69	7.24 3.22	7.88 3.80	8.51 4.45	8.01 3.53	9.15 5.12	8.71 4.17	9.41 4.85		10.11 5.60	6.43 2.08	7.20 2.61	7.96 3.19	8.73 3.82	9.47 4.52
10973	7.22 3.67	6.26 2.46	6.85 2.96	7.44 3.50	8.03 4.08	7.57 3.23	8.64 4.71	8.23 3.83	8.88 4.46		9.54 5.15	6.08 1.92	6.80 2.39	7.53 2.93	8.25 3.51	8.95 4.14
11278	6.82 3.38	5.93 2.27	6.47 2.72	7.04 3.22	7.61 3.75	7.15 2.99	8.16 4.33	7.79 3.53	8.40 4.11		9.04 4.74		6.43 2.20	7.11 2.69	7.79 3.23	8.47 3.82
11582	6.47 3.12	5.60 2.10	6.15 2.51	6.67 2.97	7.20 3.45	6.78 2.75	7.74 3.99	7.37 3.25	7.96 3.79		8.55 4.37		6.10 2.02	6.74 2.48	7.39 2.97	8.03 3.51
11887	6.12 2.88	5.31 1.94	5.82 2.32	6.32 2.74	6.85 3.19	6.43 2.53	7.35 3.69	7.00 3.00	7.57 3.50		8.12 4.04		5.80 1.88	6.39 2.29	7.00 2.75	7.61 3.25
12192	0.09 2.67	5.05 1.79	5.53 2.15	6.01 2.53	6.50 2.96	6.12 2.34	6.98 3.41	6.65 2.78	7.18 3.23		7.72 3.73		5.49 1.73	6.08 2.13	6.65 2.55	7.24 3.02
12497	5.53 2.48	4.81 1.66	5.27 1.99	5.73 2.36	6.19 2.75	5.82 2.18	6.63 3.16	6.32 2.58	6.82 3.00		7.33 3.47			5.77 1.97	6.34 2.36	6.89 2.80
12802	5.27 2.30	4.57 1.54	5.01 1.85	5.45 2.18	5.88 2.55	5.53 2.02	6.32 2.94	6.01 2.39	6.50 2.80		7.00 3.22			5.51 1.83	6.04 2.20	6.56 2.59
13106	5.03 2.14	4.37 1.44	4.79 1.72	5.21 2.04	5.62 2.37	5.29 1.89	6.04 2.74	5.75 2.23	6.21 2.61		6.67 3.00			5.25 1.70	5.75 2.04	6.26 2.42
13411	4.81 1.99	4.18 1.34	4.57 1.60	4.96 1.91	5.36 2.21	5.05 1.76	5.75 2.56	5.49 2.08	5.93 2.43		6.37 2.80			5.01 1.59	5.49 1.91	5.97 2.26
13716	4.59 1.86		4.35 1.50	4.75 1.78	5.12 2.07	4.81 1.64	5.49 2.39	5.25 1.94	5.66 2.27		6.08 2.61				5.25 1.78	5.71 2.11
14021	4.40 1.75		4.18 1.41	4.53 1.66	4.90 1.94	4.61 1.54	5.27 2.23	5.01 1.82	5.42 2.13		5.82 2.45				5.03 1.66	5.47 1.97
14326	4.20 1.63		4.00 1.31	4.35 1.56	4.68 1.82	4.42 1.44	5.03 2.10	4.79 1.70	5.18 1.98		5.58 2.29				4.81 1.56	5.23 1.85
14630	4.02 1.53		3.83 1.24	4.15 1.45	4.50 1.70	4.24 1.35	4.83 1.97	4.59 1.60	4.96 1.86		5.34 2.15				4.61 1.47	5.01 1.73
14935	3.87 1.44			4.00 1.37	4.31 1.60		4.64 1.85	4.42 1.50	4.77 1.75		5.12 2.02					4.81 1.63
15240	3.72 1.35			3.83 1.29	4.13 1.50		4.44 1.73	4.24 1.41	4.57 1.64		4.92 1.89					4.61 1.53
15545	3.56 1.28			3.67 1.21	3.98 1.41		4.26 1.63	4.07 1.32	4.40 1.54		4.72 1.79					4.44 1.44
15850	3.43 1.21			3.54 1.15	3.83 1.34		4.11 1.54	3.91 1.25	4.22 1.45		4.55 1.69					4.26 1.35
16154	3.30 1.13				3.67 1.26		3.96 1.45		4.07 1.38		4.37 1.59					
16459	3.17 1.07				3.54 1.19		3.80 1.37		3.91 1.29		4.20 1.50					
16764	3.06 1.02				3.41 1.12		3.67 1.29		3.78 1.24		4.04 1.43					
17069	2.95 0.96				3.30 1.06		3.54 1.22		3.63 1.16		3.91 1.34					
17374							3.41 1.16				3.78 1.28					
17678							3.30 1.10				3.65 1.21					
17983							3.19 1.05				3.52 1.15					
18288							3.08 1.00				3.41 1.09					

LRFD

LRFD K-SERIES ECONOMY TABLE - METRIC UNITS

Joist Designation	28K9	30K9	18K10	20K10	22K10	24K10	26K10	28K10	22K11	30K10	30K11	24K12	26K12	28K12	30K12
Depth (mm)	711	762	457	508	559	610	660	711	559	762	762	610	660	711	762
Approx. Wt. (kN/m)	0.15	0.15	0.17	0.17	0.17	0.17	0.17	0.17	0.17	0.17	0.19	0.20	0.20	0.21	0.22
Span (mm)															
5486			12.03 8.02												
5791			12.03 7.63	12.03 8.02											
6096			12.03 7.15	12.03 8.02											
6401			12.03 6.71	12.03 7.58	12.03 8.02				12.03 8.02						
6706			12.03 6.39	12.03 7.15	12.03 7.99				12.03 7.99						
7010			12.03 6.10	12.03 6.82	12.03 7.55	12.03 8.02			12.03 7.55			12.03 8.02			
7315			12.03 5.77	12.03 6.53	12.03 7.22	12.03 7.93			12.03 7.22			12.03 7.93			
7620			12.03 5.50	12.03 6.21	12.03 6.91	12.03 7.58	12.03 8.02		12.03 6.91			12.03 7.58	12.03 8.02		
7925			12.03 5.26	12.03 5.91	12.03 6.62	12.03 7.28	12.03 7.89		12.03 6.62			12.03 7.28	12.03 7.89		
8230	12.03 8.02		12.03 5.06	12.03 5.67	12.03 6.30	12.03 6.99	12.03 7.61	12.03 8.02	12.03 6.30			12.03 6.99	12.03 7.61	12.03 8.02	
8534	12.03 7.92		11.99 4.83	12.03 5.47	12.03 6.02	12.03 6.65	12.03 7.31	12.03 7.92	12.03 6.02			12.03 6.65	12.03 7.31	12.03 7.92	
8839	12.03 7.61	12.03 8.02	11.18 4.34	12.03 5.23	12.03 5.82	12.03 6.36	12.03 6.99	12.03 7.61	12.03 5.82	12.03 8.02	12.03 8.02	12.03 6.36	12.03 6.99	12.03 7.61	12.03 8.02
9144	12.03 7.29	12.03 7.92	10.44 3.92	11.66 4.90	12.03 5.61	12.03 6.15	12.03 6.69	12.03 7.29	12.03 5.61	12.03 7.92	12.03 7.92	12.03 6.15	12.03 6.69	12.03 7.29	12.03 7.92
9449	12.03 7.00	12.03 7.58	9.76 3.54	10.92 4.43	12.03 5.38	12.03 5.98	12.03 6.47	12.03 7.00	12.03 5.38	12.03 7.58	12.03 7.58	12.03 5.98	12.03 6.47	12.03 7.00	12.03 7.58
9754	12.01 6.75	12.01 7.29	9.15 3.22	10.24 4.02	11.31 4.91	12.01 5.73	12.01 6.28	12.01 6.75	12.01 5.18	12.01 7.29	12.01 7.29	12.01 5.73	12.01 6.28	12.01 6.75	12.01 7.29
10058	11.53 6.30	11.64 6.82	8.60 2.93	9.63 3.66	10.63 4.48	11.64 5.37	11.64 5.89	11.64 6.34	11.64 4.87	11.64 6.82	11.64 6.82	11.64 5.37	11.64 5.89	11.64 6.34	11.64 6.82
10363	10.85 5.76	11.29 6.43	8.09 2.68	9.06 3.34	10.02 4.08	10.98 4.91	11.29 5.51	11.29 5.98	11.29 4.58	11.29 6.43	11.29 6.43	11.29 5.02	11.29 5.51	11.29 5.98	11.29 6.43
10668	10.24 5.26	10.96 6.05	7.63 2.45	8.53 3.06	9.45 3.75	10.35 4.49	10.96 5.19	10.96 5.67	10.81 4.26	10.96 6.05	10.96 6.05	10.96 4.72	10.96 5.19	10.96 5.67	10.96 6.05
10973	9.67 4.84	10.39 5.58	7.22 2.24	8.07 2.81	8.93 3.44	9.78 4.13	10.63 4.87	10.66 5.34	10.22 3.92	10.66 5.72	10.66 5.72	10.66 4.46	10.66 4.87	10.66 5.34	10.66 5.72
11278	9.15 4.45	9.82 5.13		7.63 2.59	8.44 3.16	9.25 3.79	10.06 4.49	10.37 5.02	9.67 3.60	10.37 5.45	10.37 5.45	10.37 4.23	10.37 4.59	10.37 5.02	10.37 5.45
11582	8.66 4.11	9.32 4.74		7.24 2.39	8.01 2.91	8.77 3.50	9.54 4.14	10.09 4.74	9.17 3.32	10.09 5.15	10.09 5.15	10.09 4.01	10.09 4.36	10.09 4.74	10.09 5.15
11887	8.23 3.79	8.84 4.37		6.87 2.2	7.59 2.69	8.31 3.23	9.04 3.82	9.78 4.46	8.69 3.07	9.82 4.85	9.82 4.85	9.82 3.80	9.82 4.13	9.82 4.49	9.82 4.85
12192	7.81 3.51	8.40 4.05		6.52 2.04	7.22 2.49	7.90 3.00	8.60 3.54	9.28 4.14	8.25 2.84	9.58 4.59	9.58 4.59	9.58 3.60	9.58 3.92	9.58 4.24	9.58 4.59
12497	7.44 3.26	7.99 3.76			6.87 2.32	7.53 2.78	8.18 3.28	8.84 3.83	7.85 2.64	9.34 4.37	9.34 4.37	9.34 3.42	9.34 3.73	9.34 4.04	9.34 4.37
12802	7.09 3.03	7.61 3.50			6.54 2.15	7.15 2.58	7.79 3.06	8.40 3.57	7.48 2.45	9.04 4.11	9.12 4.14	9.12 3.26	9.12 3.56	9.12 3.85	9.12 4.14
13106	6.76 2.83	7.26 3.25			6.23 2.01	6.82 2.40	7.42 2.84	8.03 3.32	7.13 2.29	8.62 3.83	8.90 3.94	8.88 3.10	8.90 3.38	8.90 3.67	8.90 3.94
13411	6.45 2.64	6.93 3.03			5.95 1.86	6.52 2.24	7.09 2.65	7.66 3.09	6.80 2.13	8.23 3.57	8.71 3.76	8.47 2.90	8.71 3.23	8.71 3.50	8.71 3.76
13716	6.17 2.46	6.63 2.84				6.23 2.10	6.78 2.48	7.31 2.88		7.85 3.34	8.51 3.59	8.09 2.69	8.51 3.09	8.51 3.34	8.51 3.59
14021	5.91 2.30	6.34 2.65				5.95 1.97	6.47 2.32	7.00 2.71		7.53 3.12	8.31 3.44	7.74 2.53	8.31 2.96	8.31 3.19	8.31 3.44
14326	5.64 2.15	6.06 2.49				5.71 1.83	6.21 2.17	6.69 2.53		7.20 2.93	8.14 3.29	7.42 2.37	8.07 2.80	8.14 3.06	8.14 3.29
14630	5.40 2.02	5.82 2.33				5.47 1.72	5.95 2.04	6.43 2.37		6.89 2.74	7.92 3.13	7.11 2.23	7.72 2.62	7.99 2.93	7.99 3.15
14935	5.18 1.89	5.58 2.18					5.71 1.91	6.17 2.23		6.63 2.58	7.59 2.94		7.42 2.46	7.81 2.81	7.81 3.02
15240	4.99 1.79	5.36 2.05					5.47 1.80	5.91 2.10		6.37 2.42	7.28 2.77		7.11 2.32	7.66 2.69	7.66 2.90
15545	4.79 1.67	5.14 1.94					5.27 1.69	5.69 1.98		6.10 2.29	7.00 2.61		6.85 2.18	7.39 2.55	7.50 2.80
15850	4.59 1.59	4.94 1.83					5.05 1.60	5.47 1.86		5.86 2.15	6.74 2.46		6.58 2.07	7.11 2.40	7.35 2.68
16154	4.44 1.50	4.77 1.73						5.25 1.76		5.64 2.04	6.47 2.32			6.85 2.27	7.22 2.58
16459	4.26 1.41	4.57 1.63						5.07 1.66		5.45 1.92	6.23 2.18			6.58 2.14	7.09 2.48
16764	4.11 1.34	4.42 1.54						4.88 1.57		5.25 1.82	6.01 2.07			6.34 2.02	6.82 2.34
17069	3.96 1.26	4.26 1.45						4.70 1.48		5.05 1.72	5.80 1.97			6.12 1.92	6.58 2.23
17374		4.11 1.38								4.88 1.63	5.60 1.86				6.34 2.11
17678		3.96 1.31								4.70 1.54	5.40 1.76				6.12 1.99
17983		3.83 1.25								4.55 1.47	5.23 1.67				5.93 1.89
18288		3.69 1.18								4.40 1.40	5.05 1.59				5.73 1.80

ASD

ASD K-SERIES ECONOMY TABLE - STANDARD UNITS

Joist Designation	10K1	12K1	14K1	16K2	12K3	14K3	16K3	18K3	20K3	14K4	16K4	12K5	18K4	20K4	22K4	16K5
Depth (In.)	10	12	14	16	12	14	16	18	20	14	16	12	18	20	22	16
Approx. Wt. (lbs./ft)	5.0	5.0	5.2	5.5	5.7	6.0	6.3	6.4	6.5	6.7	7.0	7.1	7.2	7.2	7.3	7.5
Span (ft)																
10	550 550															
11	550 542															
12	550 455	550 550			550 550							550 550				
13	479 363	550 510			550 510							550 510				
14	412 289	500 425	550 550		550 463	550 550				550 550		550 463				
15	358 234	434 344	511 475		543 428	550 507				550 507		550 434				
16	313 192	380 282	448 390	550 550	476 351	550 467	550 550			550 467	550 550	550 396				550 550
17	277 159	336 234	395 324	512 488	420 291	495 404	550 526			550 443	550 526	550 366				550 526
18	246 134	299 197	352 272	456 409	374 245	441 339	508 456	550 550		530 397	550 490	507 317	550 550			550 490
19	221 113	268 167	315 230	408 347	335 207	395 287	455 386	514 494	550 550	475 336	547 452	454 269	550 523	550 550		550 455
20	199 97	241 142	284 197	368 297	302 177	356 246	410 330	463 423	517 517	428 287	493 386	409 230	550 490	550 550		550 426
21		218 123	257 170	333 255	273 153	322 212	371 285	420 364	468 453	388 248	447 333	370 198	506 426	550 520	550 550	503 373
22		199 106	234 147	303 222	249 132	293 184	337 247	382 316	426 393	353 215	406 289	337 172	460 370	514 461	550 548	458 323
23		181 93	214 128	277 194	227 116	268 160	308 216	349 276	389 344	322 188	371 252	308 150	420 323	469 402	518 491	418 282
24		166 81	196 113	254 170	208 101	245 141	283 189	320 242	357 302	295 165	340 221	282 132	385 284	430 353	475 431	384 248
25			180 100	234 150		226 124	260 167	294 214	329 266	272 145	313 195		355 250	396 312	438 381	353 219
26			166 88	216 133		209 110	240 148	272 190	304 236	251 129	289 173		328 222	366 277	404 338	326 194
27			154 79	200 119		193 98	223 132	252 169	281 211	233 115	268 155		303 198	339 247	374 301	302 173
28			143 70	186 106		180 88	207 118	234 151	261 189	216 103	249 138		282 177	315 221	348 270	281 155
29				173 95			193 106	218 136	243 170		232 124		263 159	293 199	324 242	261 139
30				161 86			180 96	203 123	227 153		216 112		245 144	274 179	302 219	244 126
31				151 78			168 87	190 111	212 138		203 101		229 130	256 162	283 198	228 114
32				142 71			158 79	178 101	199 126		190 92		215 118	240 147	265 180	214 103
33								168 92	187 114				202 108	226 134	249 164	
34								158 84	176 105				190 98	212 122	235 149	
35								149 77	166 96				179 90	200 112	221 137	
36								141 70	157 88				169 82	189 103	209 126	
37									148 81					179 95	198 116	
38									141 74					170 87	187 107	
39									133 69					161 81	178 98	
40									127 64					153 75	169 91	
41															161 85	
42															153 79	
43															146 73	
44															139 68	

ASD

ASD K-SERIES ECONOMY TABLE - STANDARD UNITS

Joist Designation	14K6	18K5	20K5	22K5	24K4	24K5	16K6	26K5	18K6	20K6	22K6	24K6	16K7	26K6	18K7	20K7
Depth (In).	14	18	20	22	24	24	16	26	18	20	22	24	16	26	18	20
Approx. Wt. (lbs./ft)	7.7	7.7	7.7	7.7	7.8	7.9	8.1	8.1	8.4	8.4	8.5	8.5	8.6	8.6	8.9	8.9
Span (ft)																
14	550 550															
15	550 507															
16	550 467						550 550						550 550			
17	550 443						550 526						550 526			
18	550 408	550 550					550 490		550 550				550 490		550 550	
19	550 383	550 523	550 550				550 455		550 523	550 550			550 455		550 523	550 550
20	525 347	550 490	550 550				550 426		550 490	550 550			550 426		550 490	550 550
21	475 299	550 460	550 520	550 550			548 405		550 460	550 520	550 550		550 406		550 460	550 520
22	432 259	518 414	550 490	550 548			498 351		550 438	550 490	550 548		550 385		550 438	550 490
23	395 226	473 362	529 451	550 518	550 550	550 550	455 307		516 393	550 468	550 518	550 550	507 339		550 418	550 468
24	362 199	434 318	485 396	536 483	520 516	550 544	418 269		473 345	528 430	550 495	550 544	465 298		526 382	550 448
25	334 175	400 281	446 350	493 427	479 456	540 511	384 238	550 550	435 305	486 380	537 464	550 520	428 263	550 550	485 337	541 421
26	308 156	369 249	412 310	455 379	442 405	499 453	355 211	542 535	402 271	449 337	496 411	543 493	395 233	550 541	448 299	500 373
27	285 139	342 222	382 277	422 337	410 361	462 404	329 188	502 477	372 241	416 301	459 367	503 439	366 208	547 519	415 267	463 333
28	265 124	318 199	355 248	392 302	381 323	429 362	306 168	466 427	346 216	386 269	427 328	467 393	340 186	508 464	385 239	430 298
29		296 179	330 223	365 272	354 290	400 325	285 151	434 384	322 194	360 242	398 295	435 354	317 167	473 417	359 215	401 268
30		276 161	308 201	341 245	331 262	373 293	266 137	405 346	301 175	336 218	371 266	406 319	296 151	441 377	335 194	374 242
31		258 146	289 182	319 222	310 237	349 266	249 124	379 314	281 158	314 198	347 241	380 289	277 137	413 341	313 175	350 219
32		242 132	271 165	299 201	290 215	327 241	233 112	356 285	264 144	295 179	326 219	357 262	259 124	387 309	294 159	328 199
33		228 121	254 150	281 183	273 196	308 220		334 259	248 131	277 163	306 199	335 239		364 282	276 145	309 181
34		214 110	239 137	265 167	257 179	290 201		315 237	233 120	261 149	288 182	315 218		343 257	260 132	290 165
35		202 101	226 126	249 153	242 164	273 184		297 217	220 110	246 137	272 167	297 200		323 236	245 121	274 151
36		191 92	213 115	236 141	229 150	258 169		280 199	208 101	232 125	257 153	281 183		305 216	232 111	259 139
37			202 106	223 130	216 138	244 155		265 183		220 115	243 141	266 169		289 199		245 128
38			191 98	211 119	205 128	231 143		251 169		208 106	230 130	252 156		274 184		232 118
39			181 90	200 110	195 118	219 132		238 156		198 98	218 120	239 144		260 170		220 109
40			172 84	190 102	185 109	208 122		227 145		188 91	207 111	227 133		247 157		209 101
41				181 95	176 101	198 114		215 134			197 103	216 124		235 146		
42				173 88	168 94	189 106		205 125			188 96	206 115		224 136		
43				165 82	160 88	180 98		196 116			179 89	196 107		213 126		
44				157 76	153 82	172 92		187 108			171 83	187 100		204 118		
45					146 76	164 86		179 101				179 93		194 110		
46					139 71	157 80		171 95				171 87		186 103		
47					133 67	150 75		164 89				164 82		178 96		
48					128 63	144 70		157 83				157 77		171 90		
49								150 78						164 85		
50								144 73						157 80		
51								139 69						151 75		
52								133 65						145 71		

ASD

ASD K-SERIES ECONOMY TABLE - STANDARD UNITS

Joist Designation	28K6	22K7	24K7	26K7	28K7	24K8	30K7	26K8	28K8	16K9	30K8	18K9	20K9	22K9	24K9	26K9
Depth (In).	28	22	24	26	28	24	30	26	28	16	30	18	20	22	24	26
Approx. Wt (lbs./ft.)	8.9	9.0	9.0	9.0	9.2	9.4	9.6	9.7	9.8	10.0	10.0	10.1	10.1	10.2	10.3	10.4
Span (ft.)																
16										550 550						
17										550 526						
18										550 490		550 550				
19										550 455		550 523	550 550			
20										550 426		550 490	550 550			
21		550 550								550 406		550 460	550 520	550 550		
22		550 548								550 385		550 438	550 490	550 548		
23		550 518	550 550			550 550				550 363		550 418	550 468	550 518	550 550	
24		550 495	550 544			550 544				550 346		550 396	550 448	550 495	550 544	
25		550 474	550 520	550 550		550 520		550 550		514 311		550 377	550 426	550 474	550 520	550 550
26		550 454	550 499	550 541		550 499		550 541		474 276		538 354	550 405	550 454	550 499	550 541
27	550 550	512 406	550 479	550 522	550 550	550 479		550 522	550 550	439 246		498 315	550 389	550 432	550 479	550 522
28	548 541	475 364	521 436	550 501	550 543	550 456		550 501	550 543	408 220		463 282	517 353	550 413	550 456	550 501
29	511 486	443 327	485 392	527 463	550 522	536 429	550 550	550 479	550 522	380 198	550 550	431 254	482 317	532 387	550 436	550 479
30	477 439	413 295	453 353	492 417	531 486	500 387	550 543	544 457	550 500	355 178	550 543	402 229	450 286	497 349	544 419	550 459
31	446 397	387 267	424 320	460 378	497 440	468 350	534 508	509 413	550 480	332 161	550 520	376 207	421 259	465 316	510 379	550 444
32	418 361	363 242	397 290	432 343	466 400	439 318	501 461	477 375	515 438	311 147	549 500	353 188	395 235	436 287	478 344	519 407
33	393 329	341 221	373 265	406 312	438 364	413 289	471 420	448 342	484 399		520 460	332 171	371 214	410 261	449 313	488 370
34	370 300	321 202	351 242	382 285	412 333	388 264	443 384	422 312	456 364		490 420	312 156	349 195	386 239	423 286	459 338
35	349 275	303 185	331 221	360 261	389 305	366 242	418 351	398 286	430 333		462 384	294 143	329 179	364 219	399 262	433 310
36	330 252	286 169	313 203	340 240	367 280	346 222	395 323	376 263	406 306		436 353	278 132	311 164	344 201	377 241	409 284
37	312 232	271 156	296 187	322 221	348 257	327 205	373 297	356 242	384 282		413 325		294 151	325 185	356 222	387 262
38	296 214	256 144	281 172	305 204	329 237	310 189	354 274	337 223	364 260		391 300		279 139	308 170	338 204	367 241
39	280 198	243 133	266 159	289 188	313 219	294 174	336 253	320 206	346 240		371 277		265 129	292 157	320 189	348 223
40	266 183	231 123	253 148	275 174	297 203	280 161	319 234	304 191	328 222		353 256		251 119	278 146	304 175	331 207
41	253 170	220 114	241 137	262 162	283 189	266 150	303 217	289 177	312 206		335 238			264 135	290 162	315 192
42	241 158	209 106	229 127	249 150	269 175	253 139	289 202	275 164	297 192		320 221			252 126	276 151	300 178
43	230 147	200 99	219 118	238 140	257 163	242 130	276 188	263 153	284 179		305 206			240 117	263 140	286 166
44	220 137	191 92	209 110	227 131	245 152	231 121	263 176	251 143	271 167		291 192			229 109	251 131	273 155
45	210 128		199 103	217 122	234 142	220 113	251 164	240 133	259 156		278 179				240 122	261 145
46	201 120		191 97	207 114	224 133	211 106	241 153	229 125	248 146		266 168				230 114	250 135
47	192 112		183 90	199 107	214 125	202 99	230 144	219 117	237 136		255 157				220 107	239 127
48	184 105		175 85	190 100	206 117	194 93	221 135	210 110	227 128		244 148				211 101	229 119
49	177 99			183 94	197 110		212 127	202 103	218 120		234 139					220 112
50	170 93			175 89	189 103		203 119	194 97	209 113		225 130					211 105
51	163 88			168 83	182 97		195 112	186 91	201 106		216 123					203 99
52	157 83			162 79	175 92		188 106	179 86	193 100		208 116					195 93
53	151 78				168 87		181 100		186 95		200 109					
54	145 74				162 82		174 94		179 89		192 103					
55	140 70				156 77		168 89		173 85		185 98					
56	135 66				151 73		162 84		166 80		179 92					
57							156 80				173 88					
58							151 76				167 83					
59							146 72				161 79					
60							141 69				156 75					

ASD

ASD K-SERIES ECONOMY TABLE - STANDARD UNITS

Joist Designation	28K9	30K9	18K10	20K10	22K10	24K10	26K10	28K10	22K11	30K10	30K11	24K12	26K12	28K12	30K12
Depth (In.)	28	30	18	20	22	24	26	28	22	30	30	24	26	28	30
Approx. Wt. (lbs/ft)	10.5	10.6	11.6	11.6	11.7	11.7	11.8	11.8	11.9	11.9	13.3	13.5	13.7	14.5	15.0
Span (ft.)															
18			550 550												
19			550 523	550 550											
20			550 490	550 550											
21			550 460	550 520	550 550				550 550						
22			550 438	550 490	550 548				550 548						
23			550 418	550 468	550 518	550 550			550 518			550 550			
24			550 396	550 448	550 495	550 544			550 495			550 544			
25			550 377	550 426	550 474	550 520	550 550		550 474			550 520	550 550		
26			550 361	550 405	550 454	550 499	550 541		550 454			550 499	550 541		
27	550 550		550 347	550 389	550 432	550 479	550 522	550 550	550 432			550 479	550 522	550 550	
28	550 543		548 331	550 375	550 413	550 456	550 501	550 543	550 413			550 456	550 501	550 543	
29	550 522	550 550	511 298	550 359	550 399	550 436	550 479	550 522	550 399	550 550	550 550	550 436	550 479	550 522	550 550
30	550 500	550 543	477 269	533 336	550 385	550 422	550 459	550 500	550 385	550 543	550 543	550 422	550 459	550 500	550 543
31	550 480	550 520	446 243	499 304	550 369	550 410	550 444	550 480	550 369	550 520	550 520	550 410	550 444	550 480	550 520
32	549 463	549 500	418 221	468 276	517 337	549 393	549 431	549 463	549 355	549 500	549 500	549 393	549 431	549 463	549 500
33	527 432	532 468	393 201	440 251	486 307	532 368	532 404	532 435	532 334	532 468	532 468	532 368	532 404	532 435	532 468
34	496 395	516 441	370 184	414 229	458 280	502 337	516 378	516 410	516 314	516 441	516 441	516 344	516 378	516 410	516 441
35	468 361	501 415	349 168	390 210	432 257	473 308	501 356	501 389	494 292	501 415	501 415	501 324	501 356	501 389	501 415
36	442 332	475 383	330 154	369 193	408 236	447 283	486 334	487 366	467 269	487 392	487 392	487 306	487 334	487 366	487 392
37	418 305	449 352		349 178	386 217	423 260	460 308	474 344	442 247	474 374	474 374	474 290	474 315	474 344	474 374
38	396 282	426 325		331 164	366 200	401 240	436 284	461 325	419 228	461 353	461 353	461 275	461 299	461 325	461 353
39	376 260	404 300		314 151	347 185	380 222	413 262	447 306	397 211	449 333	449 333	449 261	449 283	449 308	449 333
40	357 241	384 278		298 140	330 171	361 206	393 243	424 284	377 195	438 315	438 315	438 247	438 269	438 291	438 315
41	340 224	365 258			314 159	344 191	374 225	404 263	359 181	427 300	427 300	427 235	427 256	427 277	427 300
42	324 208	348 240			299 148	327 177	356 210	384 245	342 168	413 282	417 284	417 224	417 244	417 264	417 284
43	309 194	332 223			285 138	312 165	339 195	367 228	326 157	394 263	407 270	406 213	407 232	407 252	407 270
44	295 181	317 208			272 128	298 154	324 182	350 212	311 146	376 245	398 258	387 199	398 222	398 240	398 258
45	282 169	303 195				285 144	310 170	334 198		359 229	389 246	370 185	389 212	389 229	389 246
46	270 158	290 182				272 135	296 159	320 186		344 214	380 236	354 174	380 203	380 219	380 236
47	258 148	277 171				261 126	284 149	306 174		329 201	372 226	339 163	369 192	372 210	372 226
48	247 139	266 160				250 118	272 140	294 163		315 188	362 215	325 153	353 180	365 201	365 216
49	237 130	255 150					261 131	282 153		303 177	347 202		339 169	357 193	357 207
50	228 123	245 141					250 124	270 144		291 166	333 190		325 159	350 185	350 199
51	219 115	235 133					241 116	260 136		279 157	320 179		313 150	338 175	343 192
52	210 109	226 126					231 110	250 128		268 148	308 169		301 142	325 165	336 184
53	203 103	218 119						240 121		258 140	296 159			313 156	330 177
54	195 97	209 112						232 114		249 132	285 150			301 147	324 170
55	188 92	202 106						223 108		240 125	275 142			290 139	312 161
56	181 87	195 100						215 102		231 118	265 135			280 132	301 153
57		188 95								223 112	256 128				290 145
58		181 90								215 106	247 121				280 137
59		175 86								208 101	239 115				271 130
60		169 81								201 96	231 109				262 124

ASD

ASD K-SERIES ECONOMY TABLE - METRIC UNITS

Joist Designation	10K1	12K1	14K1	16K2	12K3	14K3	16K3	18K3	20K3	14K4	16K4	12K5	18K4	20K4	22K4	16K5
Depth (MM)	254	305	356	406	305	356	406	457	508	356	406	305	457	508	559	406
Approx. Wt. (kN/m)	0.07	0.07	0.08	0.08	0.08	0.09	0.09	0.09	0.09	0.10	0.10	0.10	0.11	0.11	0.11	0.11
Span (mm)																
3048	8.02 8.02															
3353	8.02 7.90															
3658	8.02 6.64	8.02 8.02			8.02 8.02							8.02 8.02				
3962	6.99 5.29	8.02 7.44			8.02 7.44							8.02 7.44				
4267	6.01 4.21	7.29 6.20	8.02 8.02		8.02 6.75	8.02 8.02				8.02 8.02		8.02 6.75				
4572	5.22 3.41	6.33 5.02	7.45 6.93		7.92 6.24	8.02 7.39				8.02 7.39		8.02 6.33				
4877	4.56 2.80	5.54 4.11	6.53 5.69	8.02 8.02	6.94 5.12	8.02 6.81	8.02 8.02			8.02 6.81	8.02 8.02	8.02 5.77				8.02 8.02
5182	4.04 2.32	4.90 3.41	5.76 4.72	7.47 7.12	6.12 4.24	7.22 5.89	8.02 7.67			8.02 6.46	8.02 7.67	8.02 5.34				8.02 7.67
5486	3.59 1.95	4.36 2.87	5.13 3.96	6.65 5.96	5.45 3.57	6.43 4.94	7.41 6.65	8.02 8.02		7.73 5.79	8.02 7.15	7.39 4.62	8.02 8.02			8.02 7.15
5791	3.22 1.64	3.91 2.43	4.59 3.35	5.95 5.06	4.88 3.02	5.76 4.18	6.64 5.63	7.50 7.20	8.02 8.02	6.93 4.90	7.98 6.59	6.62 3.92	8.02 7.63	8.02 8.02		8.02 6.64
6096	2.90 1.41	3.51 2.07	4.14 2.87	5.37 4.33	4.40 2.58	5.19 3.59	5.98 4.81	6.75 6.17	7.54 7.54	6.24 4.18	7.19 5.63	5.96 3.35	8.02 7.15	8.02 8.02		8.02 6.21
6401		3.18 1.79	3.75 2.48	4.85 3.72	3.98 2.23	4.69 3.09	5.41 4.15	6.12 5.31	6.82 6.61	5.66 3.61	6.52 4.85	5.39 2.88	7.38 6.21	8.02 7.58	8.02 8.02	7.34 5.44
6706		2.90 1.54	3.41 2.14	4.42 3.23	3.63 1.92	4.27 2.68	4.91 3.60	5.57 4.61	6.21 5.73	5.15 3.13	5.92 4.21	4.91 2.51	6.71 5.39	7.50 6.72	8.02 7.99	6.68 4.71
7010		2.64 1.35	3.12 1.86	4.04 2.83	3.31 1.69	3.91 2.33	4.49 3.15	5.09 4.02	5.67 5.02	4.69 2.74	5.41 3.67	4.49 2.18	6.12 4.71	6.84 5.86	7.55 7.16	6.10 4.11
7315		2.42 1.18	2.86 1.64	3.70 2.48	3.03 1.47	3.57 2.05	4.13 2.75	4.67 3.53	5.21 4.40	4.30 2.40	4.96 3.22	4.11 1.92	5.61 4.14	6.27 5.15	6.93 6.28	5.60 3.61
7620			2.62 1.45	3.41 2.18		3.29 1.80	3.79 2.43	4.29 3.12	4.80 3.88	3.96 2.11	4.56 2.84		5.18 3.64	5.77 4.55	6.39 5.56	5.15 3.19
7925			2.42 1.28	3.15 1.94		3.05 1.60	3.50 2.15	3.96 2.77	4.43 3.44	3.66 1.88	4.21 2.52		4.78 3.23	5.34 4.04	5.89 4.93	4.75 2.83
8230			2.24 1.15	2.91 1.73		2.81 1.43	3.25 1.92	3.67 2.46	4.10 3.07	3.40 1.67	3.91 2.26		4.42 2.88	4.94 3.60	5.45 4.39	4.40 2.52
8534			2.08 1.02	2.71 1.54		2.62 1.28	3.02 1.72	3.41 2.20	3.80 2.75	3.15 1.50	3.63 2.01		4.11 2.58	4.59 3.22	5.07 3.94	4.10 2.26
8839				2.52 1.38			2.81 1.54	3.18 1.98	3.54 2.48		3.38 1.80		3.83 2.32	4.27 2.90	4.72 3.53	3.80 2.02
9144				2.34 1.25			2.62 1.40	2.96 1.79	3.31 2.23		3.15 1.63		3.57 2.10	3.99 2.61	4.40 3.19	3.56 1.83
9449				2.20 1.13			2.45 1.26	2.77 1.61	3.09 2.01		2.96 1.47		3.34 1.89	3.73 2.36	4.13 2.88	3.32 1.66
9754				2.07 1.03			2.30 1.15	2.59 1.47	2.90 1.83		2.77 1.34		3.13 1.72	3.50 2.14	3.86 2.62	3.12 1.50
10058								2.45 1.34	2.72 1.66				2.94 1.57	3.29 1.95	3.63 2.39	
10363								2.30 1.22	2.56 1.53				2.77 1.43	3.09 1.78	3.42 2.17	
10668								2.17 1.12	2.42 1.40				2.61 1.31	2.91 1.63	3.22 1.99	
10973								2.05 1.02	2.29 1.28				2.46 1.19	2.75 1.50	3.05 1.83	
11278									2.15 1.18					2.61 1.38	2.88 1.69	
11582									2.05 1.07					2.48 1.26	2.72 1.56	
11887									1.94 1.00					2.34 1.18	2.59 1.43	
12192									1.85 0.93					2.23 1.09	2.46 1.32	
12497															2.34 1.24	
12802															2.23 1.15	
13106															2.13 1.06	
13411															2.02 0.99	

ASD

ASD K-SERIES ECONOMY TABLE - METRIC UNITS

Joist Designation	14K6	18K5	20K5	22K5	24K4	24K5	16K6	26K5	18K6	20K6	22K6	24K6	16K7	26K6	18K7	20K7
Depth (mm)	356	457	508	559	610	610	406	660	457	508	559	610	406	660	457	508
Approx. Wt. (kN/m)	0.11	0.11	0.11	0.11	0.11	0.12	0.12	0.12	0.12	0.12	0.12	0.12	0.13	0.13	0.13	0.13
Span (mm)																
4267	8.02 8.02															
4572	8.02 7.39															
4877	8.02 6.81						8.02 8.02						8.02 8.02			
5182	8.02 6.46						8.02 7.67						8.02 7.67			
5486	8.02 5.95	8.02 8.02					8.02 7.15		8.02 8.02				8.02 7.15		8.02 8.02	
5791	8.02 5.58	8.02 7.63	8.02 8.02				8.02 6.64		8.02 7.63	8.02 8.02			8.02 6.64		8.02 7.63	8.02 8.02
6096	7.66 5.06	8.02 7.15	8.02 8.02				8.02 6.21		8.02 7.15	8.02 8.02			8.02 6.21		8.02 7.15	8.02 8.02
6401	6.93 4.36	8.02 6.71	8.02 7.58	8.02 8.02			7.99 5.91		8.02 6.71	8.02 7.58	8.02 8.02		8.02 5.92		8.02 6.71	8.02 7.58
6706	6.30 3.77	7.55 6.04	8.02 7.15	8.02 7.99			7.26 5.12		8.02 6.39	8.02 7.15	8.02 7.99		8.02 5.61		8.02 6.39	8.02 7.15
7010	5.76 3.29	6.90 5.28	7.72 6.58	8.02 7.55	8.02 8.02	8.02 8.02	6.64 4.48		7.53 5.73	8.02 6.82	8.02 7.55	8.02 8.02	7.39 4.94		8.02 6.10	8.02 6.82
7315	5.28 2.90	6.33 4.64	7.07 5.77	7.82 7.04	7.58 7.53	8.02 7.93	6.10 3.92		6.90 5.03	7.70 6.27	8.02 7.22	8.02 7.93	6.78 4.34		7.67 5.57	8.02 6.53
7620	4.87 2.55	5.83 4.10	6.50 5.10	7.19 6.23	6.99 6.65	7.88 7.45	5.60 3.47	8.02 8.02	6.34 4.45	7.09 5.54	7.83 6.77	8.02 7.58	6.24 3.83	8.02 8.02	7.07 4.91	7.89 6.14
7925	4.49 2.27	5.38 3.63	6.01 4.52	6.64 5.53	6.45 5.91	7.28 6.61	5.18 3.07	7.90 7.80	5.86 3.95	6.55 4.91	7.23 5.99	7.92 7.19	5.76 3.40	8.02 7.89	6.53 4.36	7.29 5.44
8230	4.15 2.02	4.99 3.23	5.57 4.04	6.15 4.91	5.98 5.26	6.74 5.89	4.80 2.74	7.32 6.96	5.42 3.51	6.07 4.39	6.69 5.35	7.34 6.40	5.34 3.03	7.98 7.57	6.05 3.89	6.75 4.85
8534	3.86 1.80	4.64 2.90	5.18 3.61	5.72 4.40	5.56 4.71	6.26 5.28	4.46 2.45	6.80 6.23	5.04 3.15	5.63 3.92	6.23 4.78	6.81 5.73	4.96 2.71	7.41 6.77	5.61 3.48	6.27 4.34
8839		4.31 2.61	4.81 3.25	5.32 3.96	5.16 4.23	5.83 4.74	4.15 2.20	6.33 5.60	4.69 2.83	5.25 3.53	5.80 4.30	6.34 5.16	4.62 2.43	6.90 6.08	5.23 3.13	5.85 3.91
9144		4.02 2.34	4.49 2.93	4.97 3.57	4.83 3.82	5.44 4.27	3.88 1.99	5.91 5.04	4.39 2.55	4.90 3.18	5.41 3.88	5.92 4.65	4.31 2.20	6.43 5.50	4.88 2.83	5.45 3.53
9449		3.76 2.13	4.21 2.65	4.65 3.23	4.52 3.45	5.09 3.88	3.63 1.80	5.53 4.58	4.10 2.30	4.58 2.88	5.06 3.51	5.54 4.21	4.04 1.99	6.02 4.97	4.56 2.55	5.10 3.19
9754		3.53 1.92	3.95 2.40	4.36 2.93	4.23 3.13	4.77 3.51	3.40 1.63	5.19 4.15	3.85 2.10	4.30 2.61	4.75 3.19	5.21 3.82	3.77 1.80	5.64 4.50	4.29 2.32	4.78 2.90
10058		3.32 1.76	3.70 2.18	4.10 2.67	3.98 2.86	4.49 3.21		4.87 3.77	3.61 1.91	4.04 2.37	4.46 2.90	4.88 3.48		5.31 4.11	4.02 2.11	4.50 2.64
10363		3.12 1.60	3.48 1.99	3.86 2.43	3.75 2.61	4.23 2.93		4.59 3.45	3.40 1.75	3.80 2.17	4.20 2.65	4.59 3.18		5.00 3.75	3.79 1.92	4.23 2.40
10668		2.94 1.47	3.29 1.83	3.63 2.23	3.53 2.39	3.98 2.68		4.33 3.16	3.21 1.60	3.59 1.99	3.96 2.43	4.33 2.91		4.71 3.44	3.57 1.76	3.99 2.20
10973		2.78 1.34	3.10 1.67	3.44 2.05	3.34 2.18	3.76 2.46		4.08 2.90	3.03 1.47	3.38 1.82	3.75 2.23	4.10 2.67		4.45 3.15	3.38 1.61	3.77 2.02
11278			2.94 1.54	3.25 1.89	3.15 2.01	3.56 2.26		3.86 2.67		3.21 1.67	3.54 2.05	3.88 2.46		4.21 2.90		3.57 1.86
11582			2.78 1.43	3.07 1.73	2.99 1.86	3.37 2.08		3.66 2.46		3.03 1.54	3.35 1.89	3.67 2.27		3.99 2.68		3.38 1.72
11887			2.64 1.31	2.91 1.60	2.84 1.72	3.19 1.92		3.47 2.27		2.88 1.43	3.18 1.75	3.48 2.10		3.79 2.48		3.21 1.59
12192			2.51 1.22	2.77 1.48	2.69 1.59	3.03 1.78		3.31 2.11		2.74 1.32	3.02 1.61	3.31 1.94		3.60 2.29		3.05 1.47
12497				2.64 1.38	2.56 1.47	2.88 1.66		3.13 1.95			2.87 1.50	3.15 1.80		3.42 2.13		
12802				2.52 1.28	2.45 1.37	2.75 1.54		2.99 1.82			2.74 1.40	3.00 1.67		3.26 1.98		
13106				2.40 1.19	2.33 1.28	2.62 1.43		2.86 1.69			2.61 1.29	2.86 1.56		3.10 1.83		
13411				2.29 1.10	2.23 1.19	2.51 1.34		2.72 1.57			2.49 1.21	2.72 1.45		2.97 1.72		
13716					2.13 1.10	2.39 1.25		2.61 1.47				2.61 1.35		2.83 1.60		
14021					2.02 1.03	2.29 1.16		2.49 1.38				2.49 1.26		2.71 1.50		
14326					1.94 0.97	2.18 1.09		2.39 1.29				2.39 1.19		2.59 1.40		
14630					1.86 0.91	2.10 1.02		2.29 1.21				2.29 1.12		2.49 1.31		
14935								2.18 1.13						2.39 1.24		
15240								2.10 1.06						2.29 1.16		
15545								2.02 1.00						2.20 1.09		
15850								1.94 0.94						2.11 1.03		

ASD

ASD K-SERIES ECONOMY TABLE - METRIC UNITS

Joist Designation	28K6	22K7	24K7	26K7	28K7	24K8	30K7	26K8	28K8	16K9	30K8	18K9	20K9	22K9	24K9	26K9
Depth (mm)	711	559	610	660	711	610	762	660	711	406	762	457	508	559	610	660
Approx. Wt (kN/m)	0.13	0.13	0.13	0.13	0.13	0.14	0.14	0.14	0.14	0.15	0.15	0.15	0.15	0.15	0.15	0.15
Span (mm)																
4877										8.02 8.02						
5182										8.02 7.67						
5486										8.02 7.15		8.02 8.02				
5791										8.02 6.64		8.02 7.63	8.02 8.02			
6096										8.02 6.21		8.02 7.15	8.02 8.02			
6401		8.02 8.02								8.02 5.92		8.02 6.71	8.02 7.58	8.02 8.02		
6706		8.02 7.99								8.02 5.61		8.02 6.39	8.02 7.15	8.02 7.99		
7010		8.02 7.55	8.02 8.02			8.02 8.02				8.02 5.29		8.02 6.10	8.02 6.82	8.02 7.55	8.02 8.02	
7315		8.02 7.22	8.02 7.93			8.02 7.93				8.02 5.04		8.02 5.77	8.02 6.53	8.02 7.22	8.02 7.93	
7620		8.02 6.91	8.02 7.58	8.02 8.02		8.02 7.58		8.02 8.02		7.50 4.53		8.02 5.50	8.02 6.21	8.02 6.91	8.02 7.58	8.02 8.02
7925		8.02 6.62	8.02 7.28	8.02 7.89		8.02 7.28		8.02 7.89		6.91 4.02		7.85 5.16	8.02 5.91	8.02 6.62	8.02 7.28	8.02 7.89
8230	8.02 8.02	7.47 5.92	8.02 6.99	8.02 7.61	8.02 8.02	8.02 6.99		8.02 7.61	8.02 8.02	6.40 3.59		7.26 4.59	8.02 5.67	8.02 6.30	8.02 6.99	8.02 7.61
8534	7.99 7.89	6.93 5.31	7.60 6.36	8.02 7.31	8.02 7.92	8.02 6.65		8.02 7.31	8.02 7.92	5.95 3.21		6.75 4.11	7.54 5.15	8.02 6.02	8.02 6.65	8.02 7.31
8839	7.45 7.09	6.46 4.77	7.07 5.72	7.69 6.75	8.02 7.61	7.82 6.26	8.02 8.02	8.02 6.99	8.02 7.61	5.54 2.88	8.02 8.02	6.28 3.70	7.03 4.62	7.76 5.64	8.02 6.36	8.02 6.99
9144	6.96 6.40	6.02 4.30	6.61 5.15	7.18 6.08	7.74 7.09	7.29 5.64	8.02 7.92	7.93 6.66	8.02 7.29	5.18 2.59	8.02 7.92	5.86 3.34	6.56 4.17	7.25 5.09	7.93 6.11	8.02 6.69
9449	6.50 5.79	5.64 3.89	6.18 4.67	6.71 5.51	7.25 6.42	6.82 5.10	7.79 7.41	7.42 6.02	8.02 7.00	4.84 2.34	8.02 7.58	5.48 3.02	6.14 3.77	6.78 4.61	7.44 5.53	8.02 6.47
9754	6.10 5.26	5.29 3.53	5.79 4.23	6.30 5.00	6.80 5.83	6.40 4.64	7.31 6.72	6.96 5.47	7.51 6.39	4.53 2.14	8.01 7.29	5.15 2.74	5.76 3.42	6.36 4.18	6.97 5.02	7.57 5.93
10058	5.73 4.80	4.97 3.22	5.44 3.86	5.92 4.55	6.39 5.31	6.02 4.21	6.87 6.12	6.53 4.99	7.06 5.82		7.58 6.71	4.84 2.49	5.41 3.12	5.98 3.80	6.55 4.56	7.12 5.39
10363	5.39 4.37	4.68 2.94	5.12 3.53	5.57 4.15	6.01 4.85	5.66 3.85	6.46 5.60	6.15 4.55	6.65 5.31		7.15 6.12	4.55 2.27	5.09 2.84	5.63 3.48	6.17 4.17	6.69 4.93
10668	5.09 4.01	4.42 2.69	4.83 3.22	5.25 3.80	5.67 4.45	5.34 3.53	6.10 5.12	5.80 4.17	6.27 4.85		6.74 5.60	4.29 2.08	4.80 2.61	5.31 3.19	5.82 3.82	6.31 4.52
10973	4.81 3.67	4.17 2.46	4.56 2.96	4.96 3.50	5.35 4.08	5.04 3.23	5.76 4.71	5.48 3.83	5.92 4.46		6.36 5.15	4.05 1.92	4.53 2.39	5.02 2.93	5.50 3.51	5.96 4.14
11278	4.55 3.38	3.95 2.27	4.31 2.72	4.69 3.22	5.07 3.75	4.77 2.99	5.44 4.33	5.19 3.53	5.60 4.11		6.02 4.74		4.29 2.20	4.74 2.69	5.19 3.23	5.64 3.82
11582	4.31 3.12	3.73 2.10	4.10 2.51	4.45 2.97	4.80 3.45	4.52 2.75	5.16 3.99	4.91 3.25	5.31 3.79		5.70 4.37		4.07 2.02	4.49 2.48	4.93 2.97	5.35 3.51
11887	4.08 2.88	3.54 1.94	3.88 2.32	4.21 2.74	4.56 3.19	4.29 2.53	4.90 3.69	4.67 3.00	5.04 3.50		5.41 4.04		3.86 1.88	4.26 2.29	4.67 2.75	5.07 3.25
12192	3.88 2.67	3.37 1.79	3.69 2.15	4.01 2.53	4.33 2.96	4.08 2.34	4.65 3.41	4.43 2.78	4.78 3.23		5.15 3.73		3.66 1.73	4.05 2.13	4.43 2.55	4.83 3.02
12497	3.69 2.48	3.21 1.66	3.51 1.99	3.82 2.36	4.13 2.75	3.88 2.18	4.42 3.16	4.21 2.58	4.55 3.00		4.88 3.47			3.85 1.97	4.23 2.36	4.59 2.80
12802	3.51 2.30	3.05 1.54	3.34 1.85	3.63 2.18	3.92 2.55	3.69 2.02	4.21 2.94	4.01 2.39	4.33 2.80		4.67 3.22			3.67 1.83	4.02 2.20	4.37 2.59
13106	3.35 2.14	2.91 1.44	3.19 1.72	3.47 2.04	3.75 2.37	3.53 1.89	4.02 2.74	3.83 2.23	4.14 2.61		4.45 3.00			3.50 1.70	3.83 2.04	4.17 2.42
13411	3.21 1.99	2.78 1.34	3.05 1.60	3.31 1.91	3.57 2.21	3.37 1.76	3.83 2.56	3.66 2.08	3.95 2.43		4.24 2.80			3.34 1.59	3.66 1.91	3.98 2.26
13716	3.06 1.86		2.90 1.50	3.16 1.78	3.41 2.07	3.21 1.64	3.66 2.39	3.50 1.94	3.77 2.27		4.05 2.61				3.50 1.78	3.80 2.11
14021	2.93 1.75		2.78 1.41	3.02 1.66	3.26 1.94	3.07 1.54	3.51 2.23	3.34 1.82	3.61 2.13		3.88 2.45				3.35 1.66	3.64 1.97
14326	2.80 1.63		2.67 1.31	2.90 1.56	3.12 1.82	2.94 1.44	3.35 2.10	3.19 1.70	3.45 1.98		3.72 2.29				3.21 1.56	3.48 1.85
14630	2.68 1.53		2.55 1.24	2.77 1.45	3.00 1.70	2.83 1.35	3.22 1.97	3.06 1.60	3.31 1.86		3.56 2.15				3.07 1.47	3.34 1.73
14935	2.58 1.44			2.67 1.37	2.87 1.60		3.09 1.85	2.94 1.50	3.18 1.75		3.41 2.02					3.21 1.63
15240	2.48 1.35			2.55 1.29	2.75 1.50		2.96 1.73	2.83 1.41	3.05 1.64		3.28 1.89					3.07 1.53
15545	2.37 1.28			2.45 1.21	2.65 1.41		2.84 1.63	2.71 1.32	2.93 1.54		3.15 1.79					2.96 1.44
15850	2.29 1.21			2.36 1.15	2.55 1.34		2.74 1.54	2.61 1.25	2.81 1.45		3.03 1.69					2.84 1.35
16154	2.20 1.13				2.45 1.26		2.64 1.45		2.71 1.38		2.91 1.59					
16459	2.11 1.07				2.36 1.19		2.53 1.37		2.61 1.29		2.80 1.50					
16764	2.04 1.02				2.27 1.12		2.45 1.29		2.52 1.24		2.69 1.43					
17069	1.97 0.96				2.20 1.06		2.36 1.22		2.42 1.16		2.61 1.34					
17374							2.27 1.16				2.52 1.28					
17678							2.20 1.10				2.43 1.21					
17983							2.13 1.05				2.34 1.15					
18288							2.05 1.00				2.27 1.09					

ASD

ASD K-SERIES ECONOMY TABLE - METRIC UNITS

Joist Designation	28K9	30K9	18K10	20K10	22K10	24K10	26K10	28K10	22K11	30K10	30K11	24K12	26K12	28K12	30K12
Depth (mm)	711	762	457	508	559	610	660	711	559	762	762	610	660	711	762
Approx. Wt. (kN/m)	0.15	0.15	0.17	0.17	0.17	0.17	0.17	0.17	0.17	0.17	0.19	0.20	0.20	0.21	0.22
Span (mm)															
5486			8.02 8.02												
5791			8.02 7.63	8.02 8.02											
6096			8.02 7.15	8.02 8.02											
6401			8.02 6.71	8.02 7.58	8.02 8.02				8.02 8.02						
6706			8.02 6.39	8.02 7.15	8.02 7.99				8.02 7.99						
7010			8.02 6.10	8.02 6.82	8.02 7.55	8.02 8.02			8.02 7.55			8.02 8.02			
7315			8.02 5.77	8.02 6.53	8.02 7.22	8.02 7.93			8.02 7.22			8.02 7.93			
7620			8.02 5.50	8.02 6.21	8.02 6.91	8.02 7.58	8.02 8.02		8.02 6.91			8.02 7.58	8.02 8.02		
7925			8.02 5.26	8.02 5.91	8.02 6.62	8.02 7.28	8.02 7.89		8.02 6.62			8.02 7.28	8.02 7.89		
8230	8.02 8.02		8.02 5.06	8.02 5.67	8.02 6.30	8.02 6.99	8.02 7.61	8.02 8.02	8.02 6.30			8.02 6.99	8.02 7.61	8.02 8.02	
8534	8.02 7.92		7.99 4.83	8.02 5.47	8.02 6.02	8.02 6.65	8.02 7.31	8.02 7.92	8.02 6.02			8.02 6.65	8.02 7.31	8.02 7.92	
8839	8.02 7.61	8.02 8.02	7.45 4.34	8.02 5.23	8.02 5.82	8.02 6.36	8.02 6.99	8.02 7.61	8.02 5.82	8.02 8.02	8.02 8.02	8.02 6.36	8.02 6.99	8.02 7.61	8.02 8.02
9144	8.02 7.29	8.02 7.92	6.96 3.92	7.77 4.90	8.02 5.61	8.02 6.15	8.02 6.69	8.02 7.29	8.02 5.61	8.02 7.92	8.02 7.92	8.02 6.15	8.02 6.69	8.02 7.29	8.02 7.92
9449	8.02 7.00	8.02 7.58	6.50 3.54	7.28 4.43	8.02 5.38	8.02 5.98	8.02 6.47	8.02 7.00	8.02 5.38	8.02 7.58	8.02 7.58	8.02 5.98	8.02 6.47	8.02 7.00	8.02 7.58
9754	8.01 6.75	8.01 7.29	6.10 3.22	6.82 4.02	7.54 4.91	8.01 5.73	8.01 6.28	8.01 6.75	8.01 5.18	8.01 7.29	8.01 7.29	8.01 5.73	8.01 6.28	8.01 6.75	8.01 7.29
10058	7.69 6.30	7.76 6.82	5.73 2.93	6.42 3.66	7.09 4.48	7.76 5.37	7.76 5.89	7.76 6.34	7.76 4.87	7.76 6.82	7.76 6.82	7.76 5.37	7.76 5.89	7.76 6.34	7.76 6.82
10363	7.23 5.76	7.53 6.43	5.39 2.68	6.04 3.34	6.68 4.08	7.32 4.91	7.53 5.51	7.53 5.98	7.53 4.58	7.53 6.43	7.53 6.43	7.53 5.02	7.53 5.51	7.53 5.98	7.53 6.43
10668	6.82 5.26	7.31 6.05	5.09 2.45	5.69 3.06	6.30 3.75	6.90 4.49	7.31 5.19	7.31 5.67	7.20 4.26	7.31 6.05	7.31 6.05	7.31 4.72	7.31 5.19	7.31 5.67	7.31 6.05
10973	6.45 4.84	6.93 5.58	4.81 2.24	5.38 2.81	5.95 3.44	6.52 4.13	7.09 4.87	7.10 5.34	6.81 3.92	7.10 5.72	7.10 5.72	7.10 4.46	7.10 4.87	7.10 5.34	7.10 5.72
11278	6.10 4.45	6.55 5.13		5.09 2.59	5.63 3.16	6.17 3.79	6.71 4.49	6.91 5.02	6.45 3.60	6.91 5.45	6.91 5.45	6.91 4.23	6.91 4.59	6.91 5.02	6.91 5.45
11582	5.77 4.11	6.21 4.74		4.83 2.39	5.34 2.91	5.85 3.50	6.36 4.14	6.72 4.74	6.11 3.32	6.72 5.15	6.72 5.15	6.72 4.01	6.72 4.36	6.72 4.74	6.72 5.15
11887	5.48 3.79	5.89 4.37		4.58 2.20	5.06 2.69	5.54 3.23	6.02 3.82	6.52 4.46	5.79 3.07	6.55 4.85	6.55 4.85	6.55 3.80	6.55 4.13	6.55 4.49	6.55 4.85
12192	5.21 3.51	5.60 4.05		4.34 2.04	4.81 2.49	5.26 3.00	5.73 3.54	6.18 4.14	5.50 2.84	6.39 4.59	6.39 4.59	6.39 3.60	6.39 3.92	6.39 4.24	6.39 4.59
12497	4.96 3.26	5.32 3.76			4.58 2.32	5.02 2.78	5.45 3.28	5.89 3.83	5.23 2.64	6.23 4.37	6.23 4.37	6.23 3.42	6.23 3.73	6.23 4.04	6.23 4.37
12802	4.72 3.03	5.07 3.50			4.36 2.15	4.77 2.58	5.19 3.06	5.60 3.57	4.99 2.45	6.02 4.11	6.08 4.14	6.08 3.26	6.08 3.56	6.08 3.85	6.08 4.14
13106	4.50 2.83	4.84 3.25			4.15 2.01	4.55 2.40	4.94 2.84	5.35 3.32	4.75 2.29	5.74 3.83	5.93 3.94	5.92 3.10	5.93 3.38	5.93 3.67	5.93 3.94
13411	4.30 2.64	4.62 3.03			3.96 1.86	4.34 2.24	4.72 2.65	5.10 3.09	4.53 2.13	5.48 3.57	5.80 3.76	5.64 2.90	5.80 3.23	5.80 3.50	5.80 3.76
13716	4.11 2.46	4.42 2.84				4.15 2.10	4.52 2.48	4.87 2.88		5.23 3.34	5.67 3.59	5.39 2.69	5.67 3.09	5.67 3.34	5.67 3.59
14021	3.94 2.30	4.23 2.65				3.96 1.97	4.31 2.32	4.67 2.71		5.02 3.12	5.54 3.44	5.16 2.53	5.54 2.96	5.54 3.19	5.54 3.44
14326	3.76 2.15	4.04 2.49				3.80 1.83	4.14 2.17	4.46 2.53		4.80 2.93	5.42 3.29	4.94 2.37	5.38 2.80	5.42 3.06	5.42 3.29
14630	3.60 2.02	3.88 2.33				3.64 1.72	3.96 2.04	4.29 2.37		4.59 2.74	5.28 3.13	4.74 2.23	5.15 2.62	5.32 2.93	5.32 3.15
14935	3.45 1.89	3.72 2.18					3.80 1.91	4.11 2.23		4.42 2.58	5.06 2.94		4.94 2.46	5.21 2.81	5.21 3.02
15240	3.32 1.79	3.57 2.05					3.64 1.80	3.94 2.10		4.24 2.42	4.85 2.77		4.74 2.32	5.10 2.69	5.10 2.90
15545	3.19 1.67	3.42 1.94					3.51 1.69	3.79 1.98		4.07 2.29	4.67 2.61		4.56 2.18	4.93 2.55	5.00 2.80
15850	3.06 1.59	3.29 1.83					3.37 1.60	3.64 1.86		3.91 2.15	4.49 2.46		4.39 2.07	4.74 2.40	4.90 2.68
16154	2.96 1.50	3.18 1.73						3.50 1.76		3.76 2.04	4.31 2.32			4.56 2.27	4.81 2.58
16459	2.84 1.41	3.05 1.63						3.38 1.66		3.63 1.92	4.15 2.18			4.39 2.14	4.72 2.48
16764	2.74 1.34	2.94 1.54						3.25 1.57		3.50 1.82	4.01 2.07			4.23 2.02	4.55 2.34
17069	2.64 1.26	2.84 1.45						3.13 1.48		3.37 1.72	3.86 1.97			4.08 1.92	4.39 2.23
17374		2.74 1.38								3.25 1.63	3.73 1.86				4.23 2.11
17678		2.64 1.31								3.13 1.54	3.60 1.76				4.08 1.99
17983		2.55 1.25								3.03 1.47	3.48 1.67				3.95 1.89
18288		2.46 1.18								2.93 1.40	3.37 1.59				3.82 1.80

STANDARD ASD LOAD TABLE
STANDARD LRFD LOAD TABLE
FOR TOP CHORD EXTENSIONS (S TYPE) and (R TYPE)

Based on a 50 ksi (345 MPa) Maximum Yield Strength
ASD Load Table adopted by the Steel Joist Institute November 15, 1989
LRFD Load Table adopted by the Steel Joist Institute May 1, 2000
Revised to May 18, 2010 – Effective December 31, 2010

Joist extensions are commonly furnished to support a variety of overhang conditions. Two types are pictured below. The first is the TOP CHORD EXTENSION or "S" TYPE, which has only the top chord angles extended. The second is the EXTENDED END or "R" TYPE in which the standard 2½", (64 mm) end bearing depth is maintained over the entire length of the extension. The "S" TYPE extension is so designated because of its Simple nature whereas the "R" TYPE involves Reinforcing the top chord angles. The Specifying Professional should be aware that an "S" TYPE is more economical and should be specified whenever possible.

The following load tables are for K-Series TOP CHORD EXTENSIONS and EXTENDED ENDS for **ASD** and **LRFD** methods of design. The tabulated values are the maximum allowable uniform load in pounds per linear foot (kiloNewton/meter). The "S" and "I" numbers shown in the load tables are the Elastic Section Modulus and Moment of Inertia of the extension (Section) number with which they are associated.

In cases where it is not possible to meet specific job requirements with a 2½" (64 mm) deep "R" type extension (refer to "S" and "I" values in the Extended End Load Table), the depth of the extension must be increased to provide greater load-carrying capacity.

The "S" and "R" extension numbers are intended to be associated with Standard K-Series Joist Sizes of matching Section Number. When possible, the extension number should be limited to no more than the Standard K-Series Joist Section Number, for optimum economy.

When TOP CHORD EXTENSIONS or EXTENDED ENDS are specified the bracing requirements must be considered by the specifying professional.

It should be noted that an "R" TYPE extension must be specified when building details dictate a 2½", (64 mm) depth at the end of the extension. In the absence of specific instructions. the joist manufacturer may provide either type.

TOP CHORD EXTENSION | **EXTENDED END**

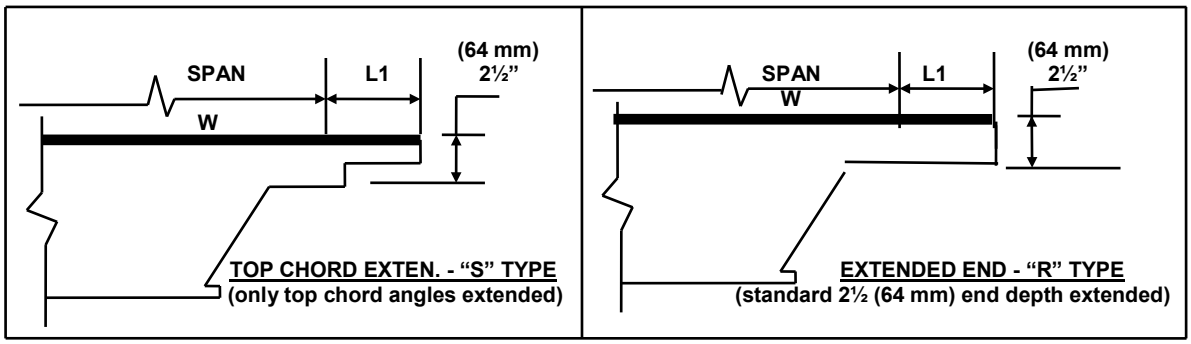

W = Uniform Load L1 = Length of Extension SPAN = See K-Series Standard Specification for Definition of Span

LRFD

TOP CHORD EXTENSION LOAD TABLE (R TYPE)
Based on a Yield Strength of 50 ksi
Pounds Per Linear Foot

TYPE	"S" (in.^{3})	"I" (in.^{4})	LENGTH (L1) 0'-6"	1'-0"	1'-6"	2'-0"	2'-6"	3'-0"	3'-6"	4'-0"	4'-6"	5'-0"	5'-6"	6'-0"
R1	0.895	1.119	825	825	825	825	825	669	498	385	307	250	208	175
R2	0.923	1.157	825	825	825	825	825	690	514	399	318	259	216	181
R3	1.039	1.299	825	825	825	825	825	777	579	448	358	292	243	205
R4	1.147	1.433	825	825	825	825	825	825	639	495	394	321	267	225
R5	1.249	1.561	825	825	825	825	825	825	696	538	429	349	291	246
R6	1.352	1.690	825	825	825	825	825	825	753	583	465	379	315	265
R7	1.422	1.802	825	825	825	825	825	825	792	613	489	399	331	279
R8	1.558	1.948	825	825	825	825	825	825	825	672	535	436	363	306
R9	1.673	2.091	825	825	825	825	825	825	825	721	576	469	390	328
R10	1.931	2.414	825	825	825	825	825	825	825	825	664	541	450	379
R11	2.183	2.729	825	825	825	825	825	825	825	825	751	612	508	430
R12	2.413	3.016	825	825	825	825	825	825	825	825	825	676	562	475

LRFD

TOP CHORD EXTENSION LOAD TABLE (S TYPE)
Based on a Yield Strength of 50 ksi
Pounds Per Linear Foot

TYPE	"S" (in.^{3})	"I" (in.^{4})	LENGTH (L1) 0'-6"	1'-0"	1'-6"	2'-0"	2'-6"	3'-0"	3'-6"	4'-0"	4'-6"			
S1	0.099	0.088	825	544	267	157								
S2	0.127	0.138	825	700	343	202								
S3	0.144	0.156	825	793	388	229								
S4	0.160	0.172	825	825	432	255	168							
S5	0.176	0.188	825	825	474	280	184							
S6	0.192	0.204	825	825	517	306	202							
S7	0.241	0.306	825	825	649	384	253	180						
S8	0.266	0.332	825	825	717	424	280	198						
S9	0.288	0.358	825	825	777	459	303	214	160					
S10	0.380	0.544	825	825	825	606	400	283	211	163				
S11	0.438	0.622	825	825	825	699	460	327	243	189	150			
S12	0.494	0.696	825	825	825	789	520	369	274	213	169			

ASD

TOP CHORD EXTENSION LOAD TABLE (R TYPE)
Based on a Yield Strength of 50 ksi
Pounds Per Linear Foot

TYPE	"S" (in.^{3})	"I" (in.^{4})	LENGTH (L1) 0'-6"	1'-0"	1'-6"	2'-0"	2'-6"	3'-0"	3'-6"	4'-0"	4'-6"	5'-0"	5'-6"	6'-0"
R1	0.895	1.119	550	550	550	550	550	446	332	257	205	167	139	117
R2	0.923	1.157	550	550	550	550	550	460	343	266	212	173	144	121
R3	1.039	1.299	550	550	550	550	550	518	386	299	239	195	162	137
R4	1.147	1.433	550	550	550	550	550	550	426	330	263	214	178	150
R5	1.249	1.561	550	550	550	550	550	550	464	359	286	233	194	164
R6	1.352	1.690	550	550	550	550	550	550	502	389	310	253	210	177
R7	1.422	1.802	550	550	550	550	550	550	528	409	326	266	221	186
R8	1.558	1.948	550	550	550	550	550	550	550	448	357	291	242	204
R9	1.673	2.091	550	550	550	550	550	550	550	481	384	313	260	219
R10	1.931	2.414	550	550	550	550	550	550	550	550	443	361	300	253
R11	2.183	2.729	550	550	550	550	550	550	550	550	501	408	339	287
R12	2.413	3.016	550	550	550	550	550	550	550	550	550	451	375	317

ASD

TOP CHORD EXTENSION LOAD TABLE (S TYPE)
Based on a Yield Strength of 50 ksi
Pounds Per Linear Foot

TYPE	"S" (in.^{3})	"I" (in.^{4})	LENGTH (L1) 0'-6"	1'-0"	1'-6"	2'-0"	2'-6"	3'-0"	3'-6"	4'-0"	4'-6"			
S1	0.099	0.088	550	363	178	105								
S2	0.127	0.138	550	467	229	135								
S3	0.144	0.156	550	529	259	153								
S4	0.160	0.172	550	550	288	170	112							
S5	0.176	0.188	550	550	316	187	123							
S6	0.192	0.204	550	550	345	204	135							
S7	0.241	0.306	550	550	433	256	169	120						
S8	0.266	0.332	550	550	478	283	187	132						
S9	0.288	0.358	550	550	518	306	202	143	107					
S10	0.380	0.544	550	550	550	404	267	189	141	109				
S11	0.438	0.622	550	550	550	466	307	218	162	126	100			
S12	0.494	0.696	550	550	550	526	347	246	183	142	113			

LRFD

TOP CHORD EXTENSION METRIC LOAD TABLE (R TYPE)
Based on a Yield Strength of 345 Mpa
Kilonewtons Per Meter (kN/m)

TYPE	"S" (mm^3)	"I" (mm^4)	LENGTH (L1)											
			152	305	457	610	762	914	1067	1219	1372	1524	1676	1829
R1	14666	465762	12.03	12.03	12.03	12.03	12.03	9.76	7.26	5.63	4.49	3.65	3.03	2.55
R2	15125	481579	12.03	12.03	12.03	12.03	12.03	10.06	7.50	5.82	4.64	3.78	3.15	2.64
R3	17026	540684	12.03	12.03	12.03	12.03	12.03	11.33	8.44	6.54	5.22	4.26	3.54	2.99
R4	18795	596459	12.03	12.03	12.03	12.03	12.03	12.03	9.32	7.22	5.74	4.68	3.89	3.28
R5	20467	649737	12.03	12.03	12.03	12.03	12.03	12.03	10.15	7.85	6.26	5.10	4.24	3.59
R6	22155	703431	12.03	12.03	12.03	12.03	12.03	12.03	10.98	8.51	6.78	5.54	4.59	3.87
R7	23302	750049	12.03	12.03	12.03	12.03	12.03	12.03	11.55	8.94	7.13	5.82	4.83	4.07
R8	25531	810818	12.03	12.03	12.03	12.03	12.03	12.03	12.03	9.80	7.82	6.36	5.29	4.46
R9	27415	870339	12.03	12.03	12.03	12.03	12.03	12.03	12.03	10.52	8.40	6.84	5.69	4.79
R10	31643	1004782	12.03	12.03	12.03	12.03	12.03	12.03	12.03	12.03	9.69	7.89	6.56	5.54
R11	35772	1135895	12.03	12.03	12.03	12.03	12.03	12.03	12.03	12.03	10.96	8.93	7.41	6.27
R12	39541	1255353	12.03	12.03	12.03	12.03	12.03	12.03	12.03	12.03	12.03	9.87	8.20	6.93

LRFD

TOP CHORD EXTENSION METRIC LOAD TABLE (S TYPE)
Based on a Yield Strength of 345 Mpa
Kilonewtons Per Meter (kN/m)

TYPE	"S" (mm^3)	"I" (mm^4)	LENGTH (L1)											
			152	305	457	610	762	914	1067	1219	1372			
S1	1622	36628	12.03	7.93	3.89	2.29								
S2	2081	57439	12.03	10.21	5.00	2.94								
S3	2359	64932	12.03	11.57	5.66	3.34								
S4	2621	71591	12.03	12.03	6.30	3.72	2.45							
S5	2884	78251	12.03	12.03	6.91	4.08	2.68							
S6	3146	84911	12.03	12.03	7.54	4.46	2.94							
S7	3949	127366	12.03	12.03	9.47	5.60	3.69	2.62						
S8	4358	138188	12.03	12.03	10.46	6.18	4.08	2.88						
S9	4719	149010	12.03	12.03	11.33	6.69	4.42	3.12	2.33					
S10	6227	226429	12.03	12.03	12.03	8.84	5.83	4.13	3.07	2.37				
S11	7177	258895	12.03	12.03	12.03	10.20	6.71	4.77	3.54	2.75	2.18			
S12	8095	289697	12.03	12.03	12.03	11.51	7.58	5.38	3.99	3.10	2.46			

ASD

TOP CHORD EXTENSION METRIC LOAD TABLE (R TYPE)
Based on a Yield Strength of 345 MPa
Kilonewtons Per Meter (kN/m)

TYPE	"S" (mm^3)	"I" (mm^4)	LENGTH (L1)											
			152	305	457	610	762	914	1067	1219	1372	1524	1676	1829
R1	14666	465762	8.02	8.02	8.02	8.02	8.02	6.50	4.84	3.75	2.99	2.43	2.02	1.70
R2	15125	481579	8.02	8.02	8.02	8.02	8.02	6.71	5.00	3.88	3.09	2.52	2.10	1.76
R3	17026	540684	8.02	8.02	8.02	8.02	8.02	7.55	5.63	4.36	3.48	2.84	2.36	1.98
R4	18796	596459	8.02	8.02	8.02	8.02	8.02	8.02	6.21	4.81	3.83	3.12	2.59	2.18
R5	20467	649737	8.02	8.02	8.02	8.02	8.02	8.02	6.77	5.23	4.17	3.40	2.83	2.39
R6	22155	703431	8.02	8.02	8.02	8.02	8.02	8.02	7.32	5.67	4.52	3.69	3.06	2.58
R7	23302	750049	8.02	8.02	8.02	8.02	8.02	8.02	7.70	5.96	4.75	3.88	3.22	2.71
R8	25531	810818	8.02	8.02	8.02	8.02	8.02	8.02	8.02	6.53	5.21	4.24	3.53	2.97
R9	27415	870339	8.02	8.02	8.02	8.02	8.02	8.02	8.02	7.01	5.60	4.56	3.79	3.19
R10	31643	1004782	8.02	8.02	8.02	8.02	8.02	8.02	8.02	8.02	6.46	5.26	4.37	3.69
R11	35773	1135895	8.02	8.02	8.02	8.02	8.02	8.02	8.02	8.02	7.31	5.95	4.94	4.18
R12	39542	1255353	8.02	8.02	8.02	8.02	8.02	8.02	8.02	8.02	8.02	6.58	5.47	4.62

ASD

TOP CHORD EXTENSION METRIC LOAD TABLE (S TYPE)
Based on a Yield Strength of 345 MPa
Kilonewtons Per Meter (kN/m)

TYPE	"S" (mm^3)	"I" (mm^4)	LENGTH (L1)											
			152	305	457	610	762	914	1067	1219	1372			
S1	1622	36628	8.02	5.29	2.59	1.53								
S2	2081	57439	8.02	6.81	3.34	1.97								
S3	2359	64932	8.02	7.72	3.77	2.23								
S4	2621	71591	8.02	8.02	4.20	2.48	1.63							
S5	2884	78251	8.02	8.02	4.61	2.72	1.79							
S6	3146	84911	8.02	8.02	5.03	2.97	1.97							
S7	3949	127366	8.02	8.02	6.31	3.73	2.46	1.75						
S8	4358	138188	8.02	8.02	6.97	4.13	2.72	1.92						
S9	4719	149010	8.02	8.02	7.55	4.46	2.94	2.08	1.56					
S10	6227	226429	8.02	8.02	8.02	5.89	3.89	2.75	2.05	1.59				
S11	7177	258895	8.02	8.02	8.02	6.80	4.48	3.18	2.36	1.83	1.45			
S12	8095	289697	8.02	8.02	8.02	7.67	5.06	3.59	2.67	2.07	1.64			

STANDARD ASD LOAD TABLE
STANDARD LRFD LOAD TABLE
FOR JOIST SUBSTITUTES AND OUTRIGGERS

Based on a 50 ksi (345 MPa) Maximum Yield Strength
LRFD Load Table adopted by the Steel Joist Institute May 1, 2001
Revised to May 18, 2010 – Effective December 31, 2010

JOIST SUBSTITUTES, SIMPLE SPAN LOAD TABLES

Joist substitutes are 2.5 inch (64 mm) deep sections intended for use in very short spans (less than 10 feet (3.05 m)) where Open Web Steel Joists are impractical. They are commonly specified to span over hallways and short spans in skewed bays.

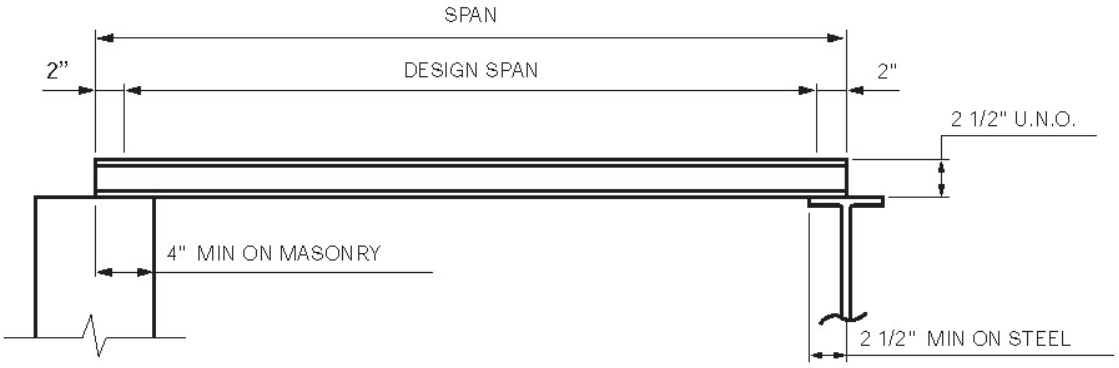

Joist substitutes are solid members that can be manufactured from material conforming to the Steel Joist Institute Standard Specifications and can be made of hot rolled or cold-formed channels or HSS as shown below.

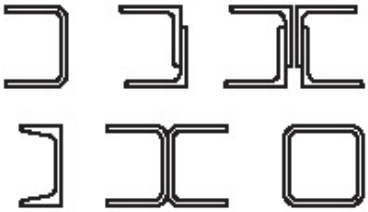

Full lateral support to the compressive flange is provided by attachments to the deck. Caution must be exercised during erection since joist substitutes exhibit some degree of instability. After erection and before loads of any description are placed on the joist substitutes, the ends must be attached to the supports per the SJI Standard Specification for Open Web Steel Joists, K-Series and the deck installed and attached to the top flange.

The Simple Span Joist Substitutes Load Tables list uniform loads based on **LRFD** and **ASD** methods of design and are shown in U.S. Customary Units.

The **BLACK** figures in the **LRFD** Load Table gives the TOTAL safe factored uniformly distributed load-carrying capacity in pounds per linear foot, of 2.5 Inch Joist Substitutes. The **BLACK** figures in the **ASD** Load Table gives the TOTAL safe unfactored uniformly distributed load-carrying capacity in pounds per linear foot, of 2.5 Inch Joist Substitutes.

The **RED** figures in the Load Table represent the unfactored, uniform load, in pounds per linear foot, which will produce an approximate joist substitute deflection of 1/360 of the span. This load can be linearly prorated to obtain the unfactored, uniform load for supplementary deflection criteria (e.g. an unfactored uniform load which will produce a joist substitute deflection of 1/240 of the span may be obtained by multiplying the **RED** figure by 360/240). In no case shall the prorated, unfactored load exceed the unfactored TOTAL load-carrying capacity of the joist substitute as given in the **ASD** Load Table for 2.5 Inch Simple Span Joist Substitutes, **K-**Series.

Minimum section properties shall be provided for the particular 2.5K type specified even at shorter spans where the developed load capacity may exceed 550 plf (**ASD**) or 825 plf (**LRFD**).

2.5K JOIST SUBSTITUTES PROPERTIES			
2.5K TYPE	**2.5K1**	**2.5K2**	**2.5K3**
S in^3	0.62	0.86	1.20
I in^4	0.77	1.07	1.50
Approx. Wt. (lbs/ft)	3.0	4.2	6.4

LRFD

LOAD TABLES FOR 2.5 INCH SIMPLE SPAN JOIST SUBSTITUTES, K-SERIES			
Based on a Yield Strength of 50 ksi			
Designation	**2.5K1**	**2.5K2**	**2.5K3**
Span (ft-in)	**Pounds per Linear Foot**		
4'-0"	825	825	825
	550	550	550
5'-0"	825	825	825
	326	452	550
6'-0"	579	803	825
	182	253	354
7'-0"	419	581	810
	112	155	218
8'-0"	316	439	612
	73	102	143
9'-0"	0	343	479
	0	71	99
10'-0"	0	0	385
	0	0	71

ASD

LOAD TABLES FOR 2.5 INCH SIMPLE SPAN JOIST SUBSTITUTES, K-SERIES			
Based on a Yield Strength of 50 ksi			
Designation	**2.5K1**	**2.5K2**	**2.5K3**
Span (ft-in)	**Pounds per Linear Foot**		
4'-0"	550	550	550
	550	550	550
5'-0"	550	550	550
	326	452	550
6'-0"	386	536	550
	182	253	354
7'-0"	279	387	540
	112	155	218
8'-0"	211	293	408
	73	102	143
9'-0"	0	229	320
	0	71	99
10'-0"	0	0	257
	0	0	71

The Simple Span Joist Substitutes Load Tables list uniform loads based on **LRFD** and **ASD** methods of design and are shown in S.I. Metric Units.

The **BLACK** figures in the **LRFD** Load Table gives the TOTAL safe factored uniformly distributed load-carrying capacity in kiloNewtons per meter, of 64 mm Joist Substitutes. The **BLACK** figures in the **ASD** Load Table gives the TOTAL safe unfactored uniformly distributed load-carrying capacity in kiloNewtons per meter, of 64 mm Joist Substitutes.

The **RED** figures in the Load Table represent the unfactored, uniform load, in kiloNewtons per meter, which will produce an approximate joist substitute deflection of 1/360 of the span. This load can be linearly prorated to obtain the unfactored, uniform load for supplementary deflection criteria (i.e. an unfactored uniform load which will produce a joist substitute deflection of 1/240 of the span may be obtained by multiplying the **RED** figure by 360/240). In no case shall the prorated, unfactored load exceed the unfactored TOTAL load-carrying capacity of the joist substitute as given in the **ASD** Load Table for 64 mm Simple Span Joist Substitutes, K-Series.

Minimum section properties shall be provided for the particular 2.5K type specified even at shorter spans where the developed load capacity may exceed 8.02 kN/m (**ASD**) or 12.03 kN/m (**LRFD**).

2.5K JOIST SUBSTITUTES PROPERTIES			
2.5K TYPE	**2.5K1**	**2.5K2**	**2.5K3**
S mm³	10160	14093	19664
I mm⁴	320498	445368	624347
Approx. Wt. (kN/m)	0.44	0.61	0.93

LRFD

LOAD TABLES FOR 64 MM SIMPLE SPAN JOIST SUBSTITUTES, K-SERIES			
Based on a Yield Strength of 345 Mpa			
Designation	**2.5K1**	**2.5K2**	**2.5K3**
Span (mm)	**KiloNewtons per Meter (kN/m)**		
1219	12.03	12.03	12.03
	8.02	8.02	8.02
1524	12.03	12.03	12.03
	4.75	6.60	8.02
1829	8.45	11.72	12.03
	2.65	3.68	5.16
2134	6.11	8.46	11.82
	1.62	2.26	3.17
2438	4.61	6.41	8.93
	1.07	1.48	2.08
2743	0.00	5.01	6.99
	0.00	1.03	1.44
3048	0.00	0.00	5.61
	0.00	0.00	1.04

ASD

LOAD TABLES FOR 64 MM SIMPLE SPAN JOIST SUBSTITUTES, K-SERIES			
Based on a Yield Strength of 345 Mpa			
Designation	**2.5K1**	**2.5K2**	**2.5K3**
Span (mm)	**KiloNewtons per Meter (kN/m)**		
1219	8.02	8.02	8.02
	8.02	8.02	8.02
1524	8.02	8.02	8.02
	4.75	6.60	8.02
1829	5.63	7.81	8.02
	2.65	3.68	5.16
2134	4.07	5.64	7.88
	1.62	2.26	3.17
2438	3.07	4.27	5.95
	1.07	1.48	2.08
2743	0.00	3.34	4.66
	0.00	1.03	1.44
3048	0.00	0.00	3.75
	0.00	0.00	1.04

JOIST SUBSTITUTES, OUTRIGGERS LOAD TABLES

Joist substitutes may be used in an outrigger condition where the member is overhanging one support as illustrated below where a portion is the back span and the remainder is the cantilever span or outrigger. Joist substitutes used in this configuration are 2.5 inch (64 mm) deep sections.

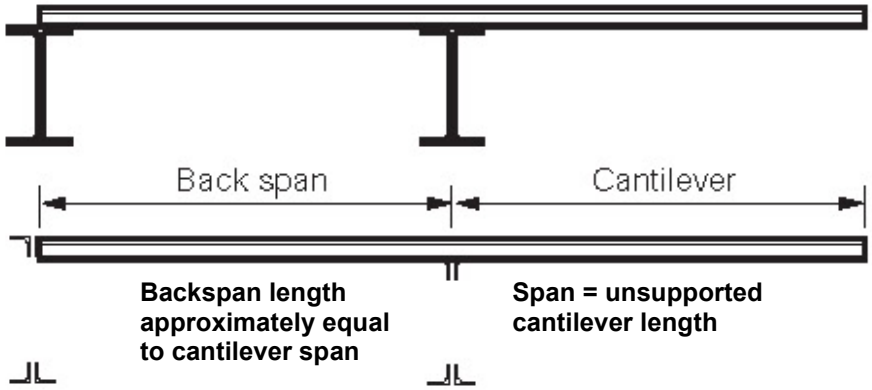

The Joist Outriggers Load Tables list uniform loads based on **LRFD** and **ASD** methods of design and shown in U.S. Customary Units

The **BLACK** figures in the **LRFD** Load Table gives the TOTAL safe factored uniformly distributed load-carrying capacity in pounds per linear foot, of 2.5 Inch Joist Outriggers. The **BLACK** figures in the **ASD** Load Table gives the TOTAL safe uniformly distributed load-carrying capacity in pounds per linear foot, of 2.5 Inch Joist Outriggers.
Serviceability requirements must be checked by the specifying professional. When calculating the actual live load deflection at the end of the cantilever it is necessary to consider the length of the back span.
Minimum section properties shall be provided for the particular 2.5K type specified even at shorter spans where the developed load capacity may exceed 550 plf (**ASD**) or 825 plf (**LRFD**).

LRFD

LOAD TABLES FOR 2.5 INCH JOIST OUTRIGGERS, K-SERIES									
OUTRIGGER TYPE	TOTAL ALLOWABLE LOAD FOR UNSUPPORTED CANTILEVER, PLF								
	SPAN (ft-in)								
	2'-0"	2'-6"	3'-0"	3'-6"	4'-0"	4'-6"	5'-0"	5'-6"	6'-0"
2.5K1	825	744	517	380	291	230	186	154	129
2.5K2	825	825	717	527	403	319	258	213	179
2.5K3	825	825	825	735	563	444	360	298	250

ASD

LOAD TABLES FOR 2.5 INCH JOIST OUTRIGGERS, K-SERIES									
OUTRIGGER TYPE	TOTAL ALLOWABLE LOAD FOR UNSUPPORTED CANTILEVER, PLF								
	SPAN (ft-in)								
	2'-0"	2'-6"	3'-0"	3'-6"	4'-0"	4'-6"	5'-0"	5'-6"	6'-0"
2.5K1	550	496	344	253	194	153	124	102	86
2.5K2	550	550	478	351	269	212	172	142	119
2.5K3	550	550	550	490	375	296	240	198	167

The Joist Outriggers Load Tables list uniform loads based on **LRFD** and **ASD** methods of design and are shown in S.I. Metric Units.

The **BLACK** figures in the **LRFD** Load Table gives the TOTAL safe factored uniformly distributed load-carrying capacity in kiloNewtons per meter, of 64 mm Joist Outriggers. The **BLACK** figures in the **ASD** Load Table gives the TOTAL safe uniformly distributed load-carrying capacity in kiloNewtons per meter, of 64 mm Joist Outriggers.
Serviceability requirements must be checked by the specifying professional. When calculating the actual live load deflection at the end of the cantilever it is necessary to consider the length of the back span.
Minimum section properties shall be provided for the particular 2.5K type specified even at shorter spans where the developed load capacity may exceed 8.02 kN/m (**ASD**) or 12.03 kN/m (**LRFD**).

LRFD

LOAD TABLES FOR 64 MM JOIST OUTRIGGERS, K-SERIES									
OUTRIGGER TYPE	TOTAL ALLOWABLE LOAD FOR UNSUPPORTED CANTILEVER, kN/m								
	SPAN (mm)								
	610	762	914	167	1219	1372	1524	1676	1229
2.5K1	12.03	10.85	7.53	5.54	4.23	3.35	2.70	2.24	1.88
2.5K2	12.03	12.03	10.46	7.68	5.88	4.64	3.77	3.11	2.61
2.5K3	12.03	12.03	12.03	10.71	8.21	6.48	5.25	4.34	3.65

ASD

LOAD TABLES FOR 64 MM JOIST OUTRIGGERS, K-SERIES									
OUTRIGGER TYPE	TOTAL ALLOWABLE LOAD FOR UNSUPPORTED CANTILEVER, kN/m								
	SPAN (mm)								
	610	762	914	167	1219	1372	1524	1676	1229
2.5K1	8.02	7.23	5.02	3.69	2.82	2.23	1.80	1.49	1.25
2.5K2	8.02	8.02	6.97	5.12	3.92	3.09	2.51	2.07	1.74
2.5K3	8.02	8.02	8.02	7.14	5.47	4.32	3.50	2.89	2.43

STANDARD LRFD LOAD TABLE

LONGSPAN STEEL JOISTS, LH-SERIES

Based on a 50 ksi (345 MPa) Maximum Yield Strength
Adopted by the Steel Joist Institute May 1, 2000
Revised to April 27, 2020 – Effective July 1, 2020

The **BLACK** figures in the Load Table give the TOTAL safe factored uniformly distributed load-carrying capacities, in pounds per linear foot (kiloNewtons per meter), of **LRFD** LH-Series Steel Joists.

The approximate joist weights, in pounds per linear foot (kiloNewtons per meter), given in the Load Table may be added to the other building weights to determine the unfactored DEAD load. In all cases the factored DEAD load, including the joist self-weight, must be deducted from the TOTAL load to determine the factored LIVE load. The approximate joist weights do not include accessories.

The **RED** figures in the Load Table represent the unfactored, uniform load, in pounds per linear foot (kiloNewtons per meter), which will produce an approximate joist deflection of 1/360 of the span. This load can be linearly prorated to obtain the unfactored, uniform load for supplementary deflection criteria (i.e. an unfactored uniform load which will produce a joist deflection of 1/240 of the span may be obtained by multiplying the **RED** figures by 360/240). In no case shall the prorated, unfactored load exceed the unfactored TOTAL load-carrying capacity of the joist as given in the Standard **ASD** Load Table for Longspan Steel Joists, LH-Series.

User Note: For floor joists, the RED figures may control the joist selection, and for longer spans consideration shall be given to the effects of camber on slab thickness. If a deeper joist designation cannot be used, CJ-Series composite joists may also be considered to take advantage of increased stiffness available due to composite action.

The Load Table applies to joists with either parallel chords or pitched top chords. Joists can have a top chord pitch up to 1/2 inch per foot (42 mm per meter). If the pitch exceeds this limit, the Load Table does not apply. When top chords are pitched, the load-carrying capacities are determined by the nominal depth of the joists at the center of the span. Sloped parallel-chord joists shall use span as defined by the length along the slope.

Where the joist span is in the **RED SHADED** area of the Load Table, the row of bridging nearest the mid span shall be diagonal bridging with bolted connections at chords and intersections. Hoisting cables shall not be released until this row of bolted diagonal bridging is completely installed. The **RED SHADED** area extends up through 60'–0" (18288 mm).

Where the joist span is in the **BLUE SHADED** area of the Load Table, all rows of bridging shall be diagonal bridging with bolted connections at chords and intersections. Hoisting cables shall not be released until the two rows of bridging nearest the third points are completely installed. The **BLUE SHADED** area starts after 60'–0" (18288 mm) and extends up through 100'–0" (30175 mm).

The approximate gross moment of inertia (not adjusted for shear deformation) of a standard joist listed in the Load Table may be determined as follows:

$I_j = 26.767(W)(L^3)(10^{-6})$ in^4 or $2.6953(W)(L^3)(10^{-5})$ mm^4, where W= **RED** figure in the Load Table, and
L = (span – 0.33) in feet or (span – 102) in millimeters

Loads for span increments not explicitly given in the Load Table may be determined using linear interpolation between the load values given in adjacent span rows. For spans shorter than the first span listed in the Load Table, the capacity shall be equal to that of the shortest listed span.

LRFD

STANDARD LOAD TABLE/OPEN WEB STEEL JOISTS, LH-SERIES

Based on a 50 ksi Maximum Yield Strength - Loads Shown In Pounds Per Linear Foot (plf)

Joist Designation	18LH02	18LH03	18LH04	18LH05	18LH06	18LH07	18LH08	18LH09	18LH10	18LH11	18LH12	18LH13	18LH14	18LH15	18LH16	18LH17	18LH18	18LH19	18LH20
Depth (in.)	18	18	18	18	18	18	18	18	18	18	18	18	18	18	18	18	18	18	18
Approx. Wt. (lbs./ft.)	10	11	12	14	15	17	19	21	23	25	28	33	36	39	44	50	57	62	83
Span (ft.) ↓																			
18	1207	1344	1558	1762	2157	2293	2592	2983	3346	3733	4126								
	805	896	1039	1175	1438	1529	1728	1889	2231	2489	2751								
19	1122	1249	1449	1639	1993	2121	2397	2746	3081	3436	3799								
	748	833	966	1093	1329	1414	1500	1601	2054	2291	2533								
20	1045	1164	1348	1527	1846	1965	2220	2532	2842	3171	3505	4207							
	696	774	896	1009	1169	1229	1283	1369	1816	2005	2226	2576							
21	973	1084	1257	1423	1714	1824	2059	2343	2628	2932	3241	3880	4237						
	600	667	772	870	1008	1059	1105	1180	1565	1728	1918	2220	2413						
22	909	1012	1174	1329	1594	1695	1915	2172	2436	2718	3004	3586	3918	4243					
	520	579	670	755	874	919	959	1024	1358	1500	1664	1926	2094	2276					
23	850	946	1098	1243	1485	1579	1783	2017	2262	2524	2790	3324	3630	3933					
	454	505	585	659	764	803	838	894	1186	1310	1454	1683	1829	1987					
24	796	886	1027	1164	1386	1473	1665	1875	2104	2349	2598	3088	3372	3654	4216				
	399	444	514	579	671	705	736	786	1042	1151	1277	1478	1607	1746	1922				
25	745	831	964	1092	1294	1377	1555	1750	1963	2191	2422	2874	3139	3402	3880	4425			
	353	392	454	511	593	623	650	694	920	1016	1128	1306	1419	1542	1697	1929			
26	702	781	906	1026	1213	1260	1314	1404	1834	2047	2263	2682	2929	3172	3585	4087			
	313	348	403	454	526	553	577	616	817	902	1001	1159	1260	1369	1506	1712			
27	663	739	856	972	1123	1213	1264	1351	1717	1917	2119	2506	2737	2967	3321	3786	4374		
	284	317	367	414	469	513	534	571	728	804	893	1033	1123	1220	1343	1526	1739		
28	627	700	802	921	1044	1170	1218	1302	1611	1797	1987	2347	2565	2778	3085	3517	4063		
	259	289	329	378	419	476	496	527	652	720	799	925	1006	1093	1203	1367	1557		
29	586	657	750	871	972	1089	1176	1257	1513	1689	1867	2203	2406	2607	2874	3276	3784	4216	
	234	262	296	345	377	428	462	491	586	647	718	832	904	982	1081	1229	1400	1538	
30	550	613	703	814	907	1017	1137	1215	1423	1588	1756	2070	2262	2451	2683	3058	3534	3936	
	212	236	266	311	340	386	427	458	529	584	648	750	816	886	975	1108	1263	1387	
31	517	573	660	762	849	952	1075	1174	1341	1494	1656	1950	2130	2307	2511	2863	3307	3684	
	193	213	242	282	307	349	387	418	479	529	587	679	738	802	883	1003	1143	1256	
32	486	538	619	714	796	892	1020	1138	1266	1401	1563	1839	2004	2176	2355	2685	3102	3454	4293
	175	194	219	256	280	317	351	380	435	480	533	617	671	729	802	911	1038	1141	1402
33	459	505	582	672	748	838	961	1069	1197	1317	1470	1735	1882	2055	2212	2523	2914	3246	4033
	160	177	200	233	254	288	320	346	396	437	485	562	611	664	731	830	946	1039	1277
34	433	475	547	631	705	789	906	1006	1131	1239	1384	1633	1773	1936	2083	2376	2743	3057	3798
	147	161	182	212	232	264	292	316	362	399	443	513	558	606	667	758	864	949	1167
35	409	448	516	595	664	744	856	949	1066	1168	1305	1540	1671	1825	1965	2241	2587	2883	3582
	135	148	167	195	212	241	267	289	331	366	406	470	511	555	611	695	791	869	1068
36	388	424	487	562	627	703	810	897	1008	1104	1233	1455	1579	1725	1855	2116	2445	2724	3384
	124	136	153	179	195	222	246	266	304	336	373	432	469	510	561	638	727	798	981

LRFD

STANDARD LOAD TABLE/OPEN WEB STEEL JOISTS, LH-SERIES

Based on a 50 ksi Maximum Yield Strength - Loads Shown In Pounds Per Linear Foot (plf)

Joist Designation	20LH02	20LH03	20LH04	20LH05	20LH06	20LH07	20LH08	20LH09	20LH10	20LH11	20LH12	20LH13	20LH14	20LH15	20LH16	20LH17	20LH18	20LH19	20LH20
Depth (in.)	20	20	20	20	20	20	20	20	20	20	20	20	20	20	20	20	20	20	20
Approx. Wt. (lbs./ft.)	10	11	12	14	15	17	19	21	23	25	28	34	37	40	45	55	61	69	87
Span (ft.) ↓																			
20	1068	1240	1365	1590	1839	2140	2325	2656	2868	3466	3832								
	680	749	910	1020	1226	1427	1487	1620	1747	2311	2555								
21	1005	1147	1276	1485	1719	1990	2163	2461	2658	3211	3550	4270							
	586	646	820	879	1146	1239	1282	1396	1506	2141	2367	2798							
22	940	1072	1194	1390	1606	1854	2014	2286	2467	2982	3297	3954	4318						
	509	560	712	763	1007	1076	1112	1212	1307	1885	2093	2428	2640						
23	880	1005	1119	1297	1507	1731	1881	2127	2295	2775	3067	3670	4008	4342					
	444	489	621	666	880	939	971	1058	1141	1647	1828	2121	2306	2507					
24	826	943	1050	1216	1413	1618	1758	1983	2139	2586	2859	3414	3729	4039					
	390	430	546	585	773	825	853	930	1003	1447	1606	1863	2026	2202					
25	775	885	987	1134	1329	1516	1645	1851	1998	2415	2670	3181	3475	3765	4371				
	345	380	482	517	683	729	754	821	886	1278	1418	1646	1789	1945	2143				
26	663	703	861	924	1233	1317	1362	1485	1602	2259	2497	2971	3246	3516	4036				
	306	337	428	459	606	647	669	729	786	1134	1259	1461	1588	1726	1902				
27	655	694	849	913	1186	1267	1309	1429	1542	2116	2341	2779	3037	3291	3739	4269			
	303	333	406	437	561	599	619	675	724	1011	1123	1302	1416	1539	1696	1930			
28	646	687	837	903	1144	1221	1263	1377	1486	1987	2197	2605	2847	3084	3474	3966			
	298	317	386	416	521	556	575	626	673	905	1005	1166	1268	1378	1519	1728			
29	615	678	792	892	1084	1179	1219	1329	1434	1869	2067	2448	2673	2896	3235	3694	4267		
	274	302	352	395	477	518	536	581	626	814	904	1048	1140	1239	1365	1554	1771		
30	582	651	744	856	1018	1140	1177	1284	1386	1759	1947	2302	2515	2725	3021	3448	3985	4447	
	250	280	320	366	427	484	500	542	585	734	815	946	1028	1118	1232	1402	1598	1759	
31	547	621	700	816	952	1066	1140	1242	1341	1660	1836	2169	2370	2568	2827	3228	3729	4162	
	228	258	291	337	386	438	468	507	545	665	738	856	931	1012	1115	1269	1447	1592	
32	516	592	660	769	894	1000	1083	1203	1297	1567	1734	2046	2236	2422	2652	3027	3498	3903	
	208	238	265	308	351	398	428	475	510	604	670	778	846	919	1013	1152	1314	1446	
33	487	558	624	726	840	940	1030	1167	1258	1479	1641	1933	2113	2289	2491	2844	3286	3669	
	190	218	243	281	320	362	395	437	479	550	610	708	770	837	922	1050	1197	1317	
34	460	528	589	687	790	885	981	1132	1221	1392	1554	1830	1993	2166	2346	2677	3094	3453	4300
	174	200	223	258	292	331	365	399	448	502	558	647	704	765	843	959	1093	1203	1483
35	436	499	558	651	745	834	931	1068	1186	1312	1465	1732	1881	2053	2212	2526	2919	3256	4056
	160	184	205	238	267	303	336	366	411	460	511	593	644	700	772	878	1001	1102	1358
36	412	474	529	616	703	789	882	1009	1122	1240	1384	1636	1776	1941	2091	2386	2757	3076	3831
	147	169	189	219	246	278	309	336	377	422	469	544	592	643	709	806	919	1012	1247
37	393	448	502	585	666	745	837	954	1060	1173	1309	1549	1681	1836	1978	2257	2608	2911	3625
	136	156	174	202	226	256	285	309	346	389	432	501	545	592	652	742	846	931	1148
38	373	424	477	556	631	706	795	904	1005	1111	1242	1468	1593	1740	1873	2139	2472	2758	3435
	126	143	161	187	209	236	262	285	320	359	398	462	502	546	602	685	781	859	1059
39	355	403	454	529	598	670	754	858	954	1054	1177	1393	1512	1651	1779	2029	2346	2617	3259
	117	133	149	173	192	218	242	264	296	331	368	427	464	505	556	633	722	794	979
40	337	382	433	504	568	637	718	816	906	1002	1119	1323	1435	1569	1690	1929	2229	2487	3097
	108	123	139	161	178	202	225	244	274	307	341	395	430	467	515	586	668	735	906

LRFD

STANDARD LOAD TABLE/OPEN WEB STEEL JOISTS, LH-SERIES
Based on a 50 ksi Maximum Yield Strength - Loads Shown In Pounds Per Linear Foot (plf)

Joist Designation	24LH03	24LH04	24LH05	24LH06	24LH07	24LH08	24LH09	24LH10	24LH11	24LH12	24LH13	24LH14	24LH15	24LH16	24LH17	24LH18	24LH19	24LH20	24LH21
Depth (in.)	24	24	24	24	24	24	24	24	24	24	24	24	24	24	24	24	24	24	24
Approx. Wt. (lbs./ft.)	11	12	13	16	17	18	21	23	25	27	32	35	38	42	49	57	62	79	88
Span (ft.) ↓																			
24	996	1084	1240	1561	1821	1930	2491	2676	2922	3352	4032	4404							
	664	723	827	1041	1214	1287	1618	1716	1796	2235	2688	2936							
25	939	1021	1168	1471	1710	1812	2332	2505	2736	3139	3766	4114	4458						
	598	681	779	981	1140	1208	1429	1515	1587	2093	2445	2660	2893						
26	885	963	1102	1387	1608	1704	2187	2347	2565	2943	3525	3850	4173						
	530	642	695	925	1020	1083	1268	1345	1408	1864	2171	2361	2568						
27	835	909	1041	1311	1513	1603	2053	2203	2410	2764	3304	3610	3912						
	473	580	620	827	910	966	1131	1199	1256	1662	1935	2105	2290						
28	790	859	984	1240	1422	1512	1932	2073	2266	2601	3103	3390	3673	4252					
	423	519	555	741	814	865	1013	1074	1124	1488	1733	1885	2050	2263					
29	747	813	931	1173	1342	1426	1824	1953	2134	2449	2919	3189	3456	3961					
	381	467	499	666	732	778	910	965	1011	1338	1558	1695	1843	2035					
30	708	771	882	1111	1272	1348	1716	1842	2011	2310	2749	3003	3255	3699	4228				
	343	421	450	601	661	702	821	871	912	1207	1406	1529	1663	1836	2094				
31	672	730	832	1054	1200	1275	1626	1740	1896	2182	2593	2833	3070	3462	3957				
	311	381	408	544	598	635	744	789	826	1093	1272	1384	1505	1662	1895				
32	637	693	781	1000	1122	1209	1530	1608	1749	2064	2449	2677	2901	3246	3711	4290			
	282	346	370	494	543	577	675	716	750	993	1156	1257	1367	1509	1721	1964			
33	606	660	738	952	1059	1146	1432	1492	1581	1956	2317	2533	2745	3051	3487	4032			
	257	315	337	450	495	525	615	652	683	904	1053	1145	1245	1375	1568	1790			
34	513	628	673	906	997	1060	1248	1323	1390	1854	2196	2400	2601	2872	3283	3795	4248		
	235	288	308	411	452	480	562	596	624	826	962	1046	1138	1256	1432	1635	1804		
35	508	597	669	868	957	1015	1212	1284	1350	1761	2083	2275	2466	2709	3096	3579	4006		
	226	265	297	382	421	447	530	559	588	756	881	958	1042	1150	1312	1497	1653		
36	504	568	660	832	919	973	1177	1248	1312	1672	1978	2161	2343	2559	2925	3382	3784		
	218	246	285	356	393	416	501	528	555	695	809	880	957	1056	1205	1375	1518		
37	484	540	628	795	882	933	1146	1213	1276	1591	1881	2055	2227	2421	2767	3199	3580	4473	
	204	227	264	331	367	388	460	500	525	639	744	810	881	972	1109	1265	1397	1729	
38	460	514	598	756	847	895	1096	1182	1243	1513	1789	1947	2119	2295	2623	3031	3393	4239	
	188	210	244	306	343	362	424	474	498	590	687	747	812	897	1023	1167	1288	1595	
39	439	490	570	720	811	858	1044	1152	1210	1435	1702	1848	2019	2176	2488	2877	3220	4023	4489
	175	195	226	284	320	338	393	439	472	545	635	690	751	829	945	1079	1191	1474	1631
40	418	468	544	685	774	817	994	1105	1180	1365	1617	1755	1918	2068	2365	2734	3060	3822	4266
	162	182	210	263	297	314	363	406	449	505	588	639	695	768	876	999	1103	1365	1510
41	400	447	520	655	736	780	948	1053	1152	1297	1539	1669	1825	1968	2250	2601	2911	3636	4059
	152	169	196	245	276	292	337	378	418	468	545	593	645	712	813	927	1024	1267	1402
42	382	427	496	625	702	745	903	1002	1101	1236	1465	1591	1738	1875	2143	2478	2773	3463	3867
	141	158	182	228	257	272	313	351	388	435	507	552	600	662	755	862	952	1178	1303
43	366	409	475	598	669	712	861	955	1051	1179	1398	1516	1657	1788	2044	2362	2644	3303	3687
	132	148	171	211	239	254	292	326	361	406	472	514	559	617	704	803	886	1097	1214
44	351	393	456	571	639	682	822	912	1006	1126	1335	1449	1582	1707	1951	2256	2524	3154	3520
	124	138	160	197	223	238	272	304	337	378	440	479	521	575	656	749	827	1023	1132
45	336	376	436	546	610	652	786	873	963	1075	1275	1384	1513	1632	1864	2155	2413	3013	3364
	116	130	150	184	208	222	254	285	315	353	412	448	487	538	613	700	772	956	1058
46	322	361	420	522	583	625	751	834	924	1029	1219	1324	1447	1561	1785	2062	2308	2883	3219
	109	122	141	172	195	208	238	266	294	331	385	419	456	503	574	655	723	895	990
47	310	346	403	501	559	600	720	799	885	985	1168	1267	1386	1494	1708	1975	2211	2761	3082
	102	114	132	161	182	196	223	249	276	310	361	393	427	471	538	614	677	838	927
48	298	333	387	480	535	576	690	766	850	945	1120	1215	1329	1432	1638	1893	2118	2646	2953
	96	107	124	152	171	184	209	234	259	291	339	368	401	442	504	576	636	787	870

LRFD

STANDARD LOAD TABLE/OPEN WEB STEEL JOISTS, LH-SERIES
Based on a 50 ksi Maximum Yield Strength - Loads Shown In Pounds Per Linear Foot (plf)

Joist Designation	28LH05	28LH06	28LH07	28LH08	28LH09	28LH10	28LH11	28LH12	28LH13	28LH14	28LH15	28LH16	28LH17	28LH18	28LH19	28LH20	28LH21	28LH22	28LH23
Depth (in.)	28	28	28	28	28	28	28	28	28	28	28	28	28	28	28	28	28	28	28
Approx. Wt. (lbs./ft.)	13	16	17	18	21	23	25	27	30	35	38	42	49	56	63	79	88	102	111
Span (ft.) ↓																			
28	939	1246	1452	1554	2013	2157	2355	2758	3051	3688	3997								
	626	831	968	1036	1342	1438	1570	1839	1944	2459	2665								
29	894	1186	1380	1474	1906	2043	2230	2611	2883	3486	3777	4443							
	596	791	920	983	1271	1362	1487	1674	1747	2324	2518	2839							
30	852	1132	1311	1401	1806	1936	2113	2476	2727	3298	3574	4197							
	568	755	874	934	1186	1291	1380	1510	1576	2130	2317	2561							
31	813	1080	1246	1333	1714	1837	2005	2349	2583	3124	3385	3970							
	542	720	818	873	1074	1169	1249	1367	1427	1928	2098	2319							
32	775	1030	1186	1269	1627	1744	1905	2232	2449	2962	3210	3760	4332						
	499	658	743	793	975	1062	1134	1242	1296	1751	1905	2106	2406						
33	741	984	1129	1209	1548	1659	1810	2121	2325	2812	3048	3565	4107						
	454	600	677	722	888	967	1033	1131	1181	1595	1735	1918	2192						
34	708	940	1077	1152	1473	1578	1723	2019	2211	2673	2896	3385	3888	4404					
	415	548	618	660	811	883	944	1033	1079	1457	1585	1752	2002	2286					
35	676	900	1027	1099	1402	1503	1641	1923	2103	2542	2755	3205	3667	4186					
	380	502	566	604	743	809	865	946	988	1335	1452	1605	1834	2094					
36	648	861	981	1050	1338	1434	1564	1834	2002	2421	2625	3027	3465	3982	4492				
	349	461	520	555	682	743	794	869	907	1226	1333	1474	1684	1923	2127				
37	621	825	937	1003	1276	1368	1494	1749	1908	2308	2502	2865	3279	3790	4249				
	321	424	478	511	628	684	731	800	835	1128	1227	1356	1550	1770	1958				
38	594	790	897	960	1219	1306	1426	1670	1821	2202	2386	2715	3106	3592	4027				
	296	391	441	471	579	631	674	738	770	1040	1132	1251	1429	1632	1806				
39	570	757	859	918	1165	1249	1363	1597	1740	2103	2280	2575	2947	3409	3822				
	274	362	408	435	536	583	623	682	712	962	1046	1157	1321	1509	1670				
40	547	727	823	880	1114	1195	1305	1528	1662	2010	2179	2448	2800	3238	3631				
	254	335	378	403	496	540	577	632	659	891	969	1071	1224	1398	1546				
41	525	699	789	843	1062	1144	1249	1464	1590	1923	2085	2329	2665	3082	3454	4326			
	236	311	351	374	460	501	536	586	612	827	899	994	1136	1297	1435	1782			
42	505	672	757	810	1000	1093	1170	1285	1342	1842	1996	2218	2538	2935	3291	4120			
	219	289	326	348	428	466	498	545	569	769	836	924	1056	1206	1334	1657			
43	484	643	726	775	958	1056	1143	1255	1311	1765	1912	2115	2421	2799	3138	3930	4387		
	205	270	305	325	400	439	475	520	543	716	779	861	983	1123	1243	1543	1708		
44	465	618	696	744	918	1018	1104	1227	1281	1693	1834	2019	2311	2673	2997	3751	4189		
	192	253	285	305	375	414	448	496	518	668	726	803	917	1048	1159	1439	1593		
45	445	592	667	712	879	976	1066	1200	1252	1624	1761	1930	2209	2554	2863	3585	4003	4404	
	180	238	267	285	351	388	423	476	495	624	679	750	857	979	1083	1345	1489	1688	
46	429	568	640	684	844	937	1023	1173	1224	1560	1692	1846	2113	2443	2740	3430	3829	4212	
	169	223	251	268	329	364	397	454	472	584	635	702	802	916	1013	1258	1393	1579	
47	412	546	615	657	810	900	982	1149	1198	1498	1626	1768	2023	2340	2623	3285	3667	4033	
	159	209	236	252	309	342	373	435	452	547	595	658	751	858	950	1179	1305	1480	
48	397	525	591	630	778	864	943	1105	1173	1437	1564	1695	1939	2242	2514	3148	3516	3867	4425
	150	197	222	236	291	322	351	408	433	513	558	617	705	805	891	1106	1225	1389	1510
49	382	505	568	604	748	831	907	1063	1149	1378	1506	1626	1860	2151	2412	3021	3372	3709	4254
	142	186	209	222	274	303	331	383	415	482	525	580	663	757	837	1040	1151	1305	1419
50	367	486	547	580	721	799	873	1023	1126	1323	1446	1561	1786	2065	2316	2899	3238	3561	4090
	133	175	197	209	258	285	312	361	396	454	493	546	623	712	788	978	1083	1228	1335
51	355	469	528	556	694	769	841	984	1083	1272	1389	1500	1716	1984	2226	2787	3111	3421	3937
	126	166	186	196	243	269	294	340	373	427	465	514	587	670	742	921	1020	1156	1257
52	342	451	508	535	669	742	810	948	1041	1222	1336	1443	1651	1909	2140	2679	2992	3291	3793
	119	156	176	185	228	255	278	321	352	403	438	485	554	632	700	869	962	1090	1186
53	330	436	490	516	645	715	781	913	1002	1176	1285	1387	1588	1837	2059	2578	2880	3166	3655
	113	148	166	175	216	241	263	303	332	380	414	457	523	597	660	820	908	1029	1119
54	319	421	474	496	622	690	753	880	964	1132	1239	1336	1530	1770	1983	2484	2773	3049	3526
	107	140	158	165	204	228	249	285	314	359	391	432	494	564	624	775	858	973	1058
55	309	406	457	478	601	666	727	849	930	1092	1194	1288	1474	1705	1912	2394	2673	2940	3403
	102	133	150	156	193	215	236	270	297	340	370	409	467	534	591	733	812	921	1001
56	298	393	442	462	580	643	702	819	897	1053	1150	1242	1422	1644	1843	2308	2577	2835	3286
	97	126	142	148	183	204	223	256	281	322	350	387	443	505	559	695	769	872	948

LRFD

STANDARD LOAD TABLE/OPEN WEB STEEL JOISTS, LH-SERIES
Based on a 50 ksi Maximum Yield Strength - Loads Shown In Pounds Per Linerar Foot (plf)

Joist Designation	32LH06	32LH07	32LH08	32LH09	32LH10	32LH11	32LH12	32LH13	32LH14	32LH15	32LH16	32LH17	32LH18	32LH19	32LH20	32LH21	32LH22	32LH23	32LH24
Depth (in.)	32	32	32	32	32	32	32	32	32	32	32	32	32	32	32	32	32	32	32
Approx. Wt. (lbs./ft.)	14	16	17	21	21	24	27	30	33	35	42	49	56	62	78	87	101	110	124
Span (ft.) ↓																			
32	982	1102	1243	1648	1776	1944	2283	2683	2874	3075	4036								
	655	735	829	1099	1184	1296	1522	1789	1916	2050	2691								
33	943	1057	1189	1573	1696	1857	2179	2557	2740	2931	3841	4426							
	629	705	793	1049	1131	1238	1453	1705	1827	1870	2553	2920							
34	907	1017	1140	1504	1620	1774	2082	2440	2613	2796	3660	4218							
	605	678	760	1003	1080	1183	1388	1605	1653	1708	2332	2668							
35	871	976	1092	1438	1549	1696	1992	2329	2494	2668	3489	4021							
	581	651	728	938	1033	1131	1323	1470	1514	1564	2136	2443							
36	838	939	1047	1375	1483	1623	1906	2226	2383	2550	3330	3837	4335						
	559	626	689	861	950	1040	1215	1350	1391	1437	1961	2244	2563						
37	805	903	1005	1317	1420	1554	1825	2128	2278	2439	3180	3664	4140						
	524	584	634	793	875	957	1118	1243	1280	1322	1805	2065	2359						
38	775	870	964	1263	1360	1489	1749	2037	2181	2332	3039	3502	3957						
	484	539	585	731	807	883	1032	1146	1181	1220	1665	1905	2176						
39	747	837	925	1210	1305	1428	1677	1950	2088	2235	2907	3351	3786	4335					
	447	498	540	676	746	816	954	1060	1091	1127	1539	1761	2012	2230					
40	718	807	889	1161	1251	1369	1609	1869	2001	2140	2784	3208	3624	4144					
	414	461	501	626	691	756	883	981	1011	1044	1426	1631	1863	2066					
41	693	777	855	1114	1201	1315	1545	1792	1918	2053	2667	3073	3472	3966					
	384	428	465	581	641	701	820	911	938	969	1323	1513	1729	1917					
42	667	748	823	1071	1155	1263	1483	1719	1842	1971	2557	2934	3330	3798					
	357	398	432	540	596	652	762	847	872	901	1230	1407	1608	1782					
43	645	723	792	1030	1110	1215	1426	1651	1768	1893	2443	2797	3195	3633					
	333	371	402	503	555	607	710	789	812	839	1146	1310	1497	1660					
44	621	697	763	990	1068	1168	1372	1587	1699	1818	2332	2671	3069	3468	4350				
	310	346	375	469	518	567	662	736	758	783	1069	1222	1397	1548	1927				
45	600	673	735	954	1027	1125	1320	1525	1633	1749	2229	2553	2949	3315	4156				
	290	323	351	439	484	529	619	687	708	731	998	1142	1305	1447	1801				
46	579	649	709	918	990	1083	1272	1468	1572	1683	2133	2442	2824	3171	3976	4441			
	271	302	328	410	453	495	579	643	663	684	934	1069	1221	1354	1685	1866			
47	559	628	684	885	954	1044	1225	1414	1513	1620	2041	2338	2704	3037	3808	4252			
	254	283	307	385	424	464	542	603	621	641	875	1001	1144	1268	1579	1749			
48	541	607	660	849	919	1006	1182	1362	1458	1560	1957	2241	2593	2910	3649	4077	4485		
	239	266	288	361	398	436	509	566	583	602	821	940	1074	1190	1482	1641	1862		
49	523	586	637	816	886	970	1140	1312	1405	1504	1878	2151	2487	2793	3501	3910	4303		
	224	250	271	339	374	409	478	531	547	565	772	883	1009	1118	1392	1542	1750		
50	507	568	616	774	856	937	1101	1225	1264	1305	1803	2064	2388	2680	3361	3754	4131		
	211	235	255	319	352	385	450	500	515	532	726	831	949	1052	1310	1451	1646		
51	489	549	595	747	825	903	1068	1201	1239	1279	1732	1984	2295	2575	3231	3607	3970	4477	
	199	223	242	302	332	363	428	480	495	511	684	782	894	991	1234	1366	1550	1689	
52	472	529	574	720	796	870	1032	1177	1215	1255	1666	1908	2206	2478	3106	3469	3817	4315	
	189	211	229	285	315	343	406	461	476	492	645	738	843	935	1163	1288	1462	1593	
53	456	511	553	694	768	840	996	1156	1192	1231	1603	1836	2124	2383	2989	3339	3673	4162	4381
	179	200	216	270	297	325	384	444	458	473	609	697	796	882	1098	1216	1380	1504	1628
54	441	493	535	670	742	811	961	1113	1170	1207	1543	1768	2046	2296	2880	3216	3538	4018	4219
	169	189	205	256	282	308	364	420	440	454	575	658	752	834	1038	1150	1305	1421	1539
55	426	477	517	648	717	783	928	1072	1149	1186	1488	1704	1971	2212	2775	3099	3409	3880	4066
	161	179	194	243	267	292	345	397	417	438	544	623	712	789	982	1088	1234	1344	1456
56	412	462	499	627	693	757	897	1035	1107	1164	1435	1644	1900	2134	2676	2989	3288	3748	3921
	153	170	184	230	254	277	327	376	395	422	516	590	674	747	930	1030	1169	1273	1379
57	399	447	483	606	667	732	867	999	1069	1144	1384	1585	1834	2059	2583	2884	3174	3624	3784
	145	162	175	219	240	263	311	354	374	407	489	559	639	708	882	977	1108	1207	1307
58	385	432	468	586	645	709	838	964	1032	1125	1336	1531	1771	1989	2493	2785	3064	3505	3654
	138	154	167	208	228	251	295	336	355	393	464	531	606	672	837	927	1051	1145	1240
59	373	418	453	568	624	687	811	931	997	1087	1291	1479	1711	1921	2409	2691	2961	3393	3531
	131	146	159	198	217	239	281	319	337	374	440	504	576	638	794	880	999	1088	1178
60	363	406	439	550	603	664	786	900	964	1051	1249	1431	1654	1857	2329	2601	2862	3285	3412
	125	140	151	189	206	227	267	304	321	355	419	479	547	607	755	836	949	1034	1120
61	351	393	426	534	583	643	762	871	933	1017	1207	1383	1600	1797	2253	2517	2769	3183	3301
	119	133	144	180	196	216	255	288	304	338	398	456	521	577	718	796	903	984	1065
62	340	381	412	517	564	624	738	843	903	984	1168	1339	1549	1738	2181	2436	2679	3085	3195
	114	127	137	172	186	206	243	275	290	322	379	434	496	549	684	758	860	937	1014
63	330	370	400	502	546	604	715	816	874	952	1132	1296	1500	1684	2112	2358	2595	2991	3094
	108	121	131	164	178	196	232	262	276	306	361	413	472	524	652	722	819	892	966
64	321	360	388	487	529	585	694	790	846	924	1096	1255	1453	1632	2046	2284	2514	2901	2997
	104	116	125	157	169	187	221	249	264	292	344	394	450	499	622	688	781	851	922

LRFD

STANDARD LOAD TABLE/OPEN WEB STEEL JOISTS, LH-SERIES
Based on a 50 ksi Maximum Yield Strength - Loads Shown In Pounds Per Linerar Foot (plf)

Joist Designation	36LH07	36LH08	36LH09	36LH10	36LH11	36LH12	36LH13	36LH14	36LH15	36LH16	36LH17	36LH18	36LH19	36LH20	36LH21	36LH22	36LH23	36LH24	36LH25
Depth (in.)	36	36	36	36	36	36	36	36	36	36	36	36	36	36	36	36	36	36	36
Approx. Wt. (lbs./ft.)	16	18	21	21	23	25	30	36	36	44	49	58	64	81	92	100	122	130	149
Span (ft.) ↓																			
36	873	1002	1276	1509	1596	1909	2299	2533	2742	3511	4048								
	582	668	851	1006	1064	1273	1533	1689	1828	2341	2699								
37	843	966	1230	1450	1533	1836	2206	2431	2631	3364	3879	4381							
	562	644	820	967	1022	1224	1471	1621	1754	2243	2586	2921							
38	814	930	1170	1393	1474	1765	2118	2334	2526	3225	3718	4200							
	543	620	780	929	983	1177	1412	1556	1684	2139	2449	2799							
39	787	897	1143	1341	1419	1698	2035	2241	2425	3094	3567	4030							
	525	598	762	894	946	1132	1357	1494	1592	1977	2264	2587							
40	762	864	1102	1290	1365	1635	1956	2154	2331	2970	3424	3868	4479						
	508	576	735	839	910	1088	1275	1401	1475	1831	2097	2396	2661						
41	736	834	1065	1243	1314	1573	1881	2071	2241	2853	3289	3715	4294						
	491	553	704	778	847	1009	1183	1300	1369	1699	1946	2224	2469						
42	712	805	1027	1197	1266	1516	1809	1993	2157	2742	3162	3571	4122						
	469	514	655	724	787	938	1100	1209	1272	1580	1809	2068	2295						
43	690	777	991	1153	1221	1461	1741	1918	2076	2637	3040	3435	3957						
	437	479	610	674	733	874	1025	1126	1185	1471	1685	1926	2138						
44	667	750	958	1113	1177	1410	1677	1848	1999	2538	2925	3306	3802						
	408	447	569	629	684	815	956	1050	1106	1372	1572	1796	1994						
45	646	726	927	1074	1135	1360	1617	1780	1927	2443	2817	3183	3655						
	381	417	532	587	639	762	893	981	1033	1282	1468	1678	1863						
46	625	700	895	1036	1096	1312	1558	1717	1858	2353	2713	3066	3517	4423					
	356	391	497	550	598	713	836	918	967	1200	1374	1570	1744	2174					
47	606	678	867	1000	1059	1267	1503	1656	1792	2268	2616	2955	3387	4258					
	334	366	466	515	560	668	783	860	906	1124	1287	1472	1634	2038					
48	588	655	838	967	1023	1224	1450	1599	1729	2188	2523	2850	3262	4102					
	313	344	437	483	526	627	735	807	850	1055	1208	1381	1533	1912					
49	570	634	811	934	988	1183	1401	1543	1671	2110	2434	2751	3144	3954	4353				
	294	323	411	454	494	589	690	759	799	991	1135	1297	1440	1797	1991				
50	552	615	786	903	955	1144	1354	1491	1614	2038	2343	2656	3033	3813	4198				
	277	304	387	427	465	554	650	714	751	933	1068	1221	1355	1690	1873				
51	535	595	762	874	924	1107	1308	1441	1560	1965	2251	2565	2926	3675	4051				
	261	286	364	403	438	522	612	672	708	878	1006	1150	1276	1592	1764				
52	520	576	738	846	895	1072	1266	1395	1509	1888	2164	2479	2814	3534	3912	4344			
	246	270	343	380	413	492	577	634	667	828	949	1084	1204	1501	1664	1889			
53	505	559	715	819	867	1038	1224	1335	1459	1818	2083	2397	2709	3400	3778	4180			
	232	255	324	358	390	465	545	599	630	782	896	1024	1136	1417	1571	1783			
54	490	541	693	790	838	1005	1185	1306	1413	1750	2007	2319	2608	3274	3652	4026	4465		
	220	241	306	339	368	439	515	566	596	739	846	967	1074	1340	1484	1685	1838		
55	477	525	673	763	813	975	1147	1264	1368	1687	1933	2236	2514	3156	3526	3880	4317		
	208	228	290	320	349	416	487	535	563	699	801	915	1016	1267	1404	1594	1739		
56	463	510	652	736	789	945	1111	1225	1326	1627	1864	2157	2424	3043	3400	3742	4174	4471	
	197	216	275	303	330	394	461	507	534	662	758	867	962	1200	1330	1510	1647	1787	
57	450	495	634	711	765	916	1077	1188	1285	1570	1800	2082	2340	2937	3282	3612	4038	4315	
	187	204	260	288	313	373	437	481	506	628	719	822	912	1138	1261	1431	1562	1694	
58	438	481	616	681	742	889	1045	1152	1213	1516	1737	2010	2259	2836	3168	3487	3909	4167	
	177	194	247	273	297	354	415	456	480	596	682	780	866	1080	1196	1358	1482	1607	
59	424	466	597	660	720	862	1012	1132	1192	1465	1678	1942	2182	2740	3061	3369	3786	4026	
	168	185	235	260	283	338	395	434	464	566	648	740	822	1025	1136	1290	1407	1526	
60	411	453	579	639	697	835	981	1093	1171	1416	1623	1878	2110	2649	2959	3258	3669	3892	
	160	176	224	248	269	322	376	412	448	538	616	704	781	975	1080	1226	1338	1451	
61	399	439	561	619	676	810	951	1059	1153	1369	1570	1816	2041	2563	2863	3151	3556	3765	4456
	153	168	214	236	257	307	359	392	434	512	586	670	743	927	1027	1166	1273	1380	1608
62	387	426	544	601	657	784	922	1024	1116	1326	1519	1758	1975	2481	2770	3049	3448	3643	4312
	146	160	204	225	246	292	342	373	413	487	558	638	708	883	978	1111	1212	1314	1531
63	376	414	528	583	637	762	894	991	1081	1284	1471	1702	1912	2401	2683	2953	3345	3528	4176
	140	153	195	215	234	279	327	356	394	464	531	607	674	841	932	1058	1155	1252	1458
64	366	402	513	567	618	739	868	961	1047	1243	1425	1648	1854	2326	2599	2860	3247	3418	4045
	134	146	186	206	224	267	312	339	375	443	507	579	643	802	889	1009	1101	1194	1391
65	355	390	499	550	601	717	843	931	1015	1206	1381	1599	1797	2256	2520	2773	3153	3313	3922
	128	140	179	197	214	255	298	323	358	422	484	553	614	766	848	963	1051	1139	1327
66	345	379	484	535	583	696	819	903	984	1168	1339	1549	1741	2187	2443	2689	3063	3213	3804
	122	134	171	188	205	243	285	309	342	403	462	528	586	731	810	920	1003	1088	1268
67	336	369	471	520	567	675	796	876	955	1134	1300	1504	1690	2122	2370	2608	2976	3117	3690
	117	128	163	180	196	232	273	295	327	385	441	504	560	699	774	879	959	1040	1211
68	327	358	459	507	552	655	774	850	927	1101	1261	1459	1641	2059	2301	2532	2893	3025	3582
	112	123	157	173	188	222	262	283	312	369	422	482	536	668	740	841	917	994	1158
69	318	349	445	492	537	636	753	826	900	1069	1225	1417	1593	2001	2235	2460	2814	2938	3478
	107	118	150	165	180	213	251	270	299	353	404	462	513	639	708	804	877	952	1109
70	310	340	433	480	522	618	732	802	874	1039	1191	1377	1548	1944	2170	2389	2737	2854	3379
	103	113	144	159	173	204	240	259	286	338	387	442	491	612	678	770	840	911	1061
71	301	331	423	466	508	600	712	780	850	1009	1156	1338	1504	1888	2109	2322	2664	2775	3283
	99	109	138	152	166	195	231	247	274	323	370	423	470	587	650	738	805	873	1017
72	294	322	412	454	495	583	694	757	826	981	1125	1302	1462	1836	2050	2257	2593	2698	3193
	95	104	133	146	159	187	222	237	263	310	355	406	451	562	623	707	772	837	975

LRFD

STANDARD LOAD TABLE/OPEN WEB STEEL JOISTS, LH-SERIES

Based on a 50 ksi Maximum Yield Strength - Loads Shown In Pounds Per Linear Foot (plf)

Joist Designation	40LH08	40LH09	40LH10	40LH11	40LH12	40LH13	40LH14	40LH15	40LH16	40LH17	40LH18	40LH19	40LH20	40LH21	40LH22	40LH23	40LH24	40LH25
Depth (in.)	40	40	40	40	40	40	40	40	40	40	40	40	40	40	40	40	40	40
Approx. Wt. (lbs./ft.)	16	21	21	22	25	30	35	36	42	51	56	64	81	93	100	121	127	148
Span (ft.) ↓																		
40	778	1057	1258	1318	1602	1945	2220	2482	2944	3565	4027							
	519	705	839	879	1068	1297	1480	1655	1963	2377	2685							
41	756	1023	1215	1275	1548	1876	2140	2395	2836	3435	3879							
	504	682	810	850	1032	1251	1427	1597	1891	2290	2586							
42	735	990	1174	1231	1495	1810	2065	2310	2733	3309	3738	4368						
	490	660	783	821	997	1207	1377	1540	1822	2206	2492	2874						
43	712	960	1135	1191	1446	1747	1993	2230	2634	3190	3604	4203						
	475	640	757	794	964	1165	1329	1487	1756	2106	2403	2677						
44	693	930	1098	1150	1398	1687	1926	2154	2541	3078	3477	4047						
	462	620	732	767	932	1125	1284	1436	1694	1965	2246	2497						
45	672	901	1062	1113	1353	1630	1860	2080	2452	2970	3354	3898						
	448	601	686	742	902	1061	1217	1357	1490	1836	2099	2333						
46	652	873	1027	1077	1309	1575	1797	2010	2367	2866	3238	3757						
	435	582	642	696	847	993	1139	1270	1394	1718	1964	2183						
47	634	846	994	1042	1267	1522	1738	1944	2286	2769	3129	3624						
	418	546	602	652	794	931	1067	1190	1307	1610	1840	2046						
48	616	820	963	1009	1227	1473	1681	1881	2209	2676	3022	3496	4399					
	392	512	565	612	745	873	1001	1116	1226	1510	1727	1920	2398					
49	600	796	933	978	1188	1425	1626	1819	2136	2586	2922	3376	4248					
	368	482	531	575	700	821	941	1049	1152	1419	1623	1804	2253					
50	583	772	904	948	1152	1380	1575	1761	2065	2502	2826	3261	4102					
	347	453	499	541	659	772	885	987	1084	1335	1527	1697	2120					
51	567	750	876	919	1116	1336	1524	1705	1998	2421	2734	3151	3964	4365				
	327	427	470	509	620	727	834	930	1021	1258	1438	1598	1997	2213				
52	552	729	849	891	1083	1294	1477	1651	1935	2343	2647	3046	3834	4221				
	308	402	443	480	585	686	786	877	963	1186	1356	1507	1883	2087				
53	537	708	823	864	1050	1254	1431	1600	1873	2269	2563	2947	3708	4083				
	291	380	419	454	552	647	742	828	909	1120	1280	1423	1778	1970				
54	522	687	799	838	1018	1216	1387	1552	1815	2197	2484	2851	3588	3951				
	275	359	396	429	522	612	702	782	859	1058	1210	1345	1680	1862				
55	508	669	777	814	988	1179	1345	1506	1758	2130	2407	2761	3474	3825	4351			
	260	340	374	406	494	579	664	740	813	1001	1145	1272	1590	1762	2001			
56	495	649	754	790	960	1144	1305	1461	1705	2065	2334	2674	3364	3705	4195			
	246	322	355	384	468	548	629	701	770	948	1084	1205	1505	1668	1895			
57	483	631	732	768	933	1110	1267	1417	1654	2004	2263	2592	3261	3591	4050	4410		
	233	305	336	364	444	520	596	664	730	899	1028	1142	1427	1582	1797	1962		
58	469	615	711	745	906	1078	1230	1377	1605	1944	2197	2512	3160	3481	3910	4273		
	221	289	319	346	421	493	566	631	693	853	975	1084	1354	1501	1705	1862		
59	457	598	691	724	880	1047	1195	1336	1557	1878	2133	2436	3066	3376	3778	4141		
	210	275	303	328	400	468	537	599	658	810	926	1029	1286	1425	1619	1768		
60	445	582	670	705	856	1017	1161	1299	1512	1816	2071	2362	2970	3276	3652	4015	4371	
	200	261	288	312	380	445	511	569	625	770	880	979	1222	1355	1539	1681	1825	
61	435	567	649	685	832	988	1128	1263	1470	1756	2011	2286	2872	3178	3532	3895	4228	
	190	249	274	297	361	424	486	542	595	732	837	931	1163	1289	1464	1599	1736	
62	424	552	628	667	810	961	1096	1227	1428	1699	1954	2212	2779	3087	3418	3781	4092	
	181	237	261	283	344	403	462	516	566	697	797	886	1107	1227	1394	1523	1653	
63	414	537	609	649	789	934	1066	1194	1387	1645	1900	2142	2692	2998	3310	3670	3963	
	173	226	249	269	328	384	441	491	540	664	760	845	1055	1169	1328	1451	1575	
64	403	523	591	631	768	909	1038	1161	1350	1594	1845	2076	2608	2914	3207	3565	3840	
	165	215	237	257	313	366	420	469	515	634	724	805	1006	1115	1267	1383	1502	
65	393	510	573	615	747	885	1009	1129	1312	1546	1788	2011	2527	2824	3109	3463	3721	4405
	157	205	226	245	298	350	401	447	491	605	691	769	960	1064	1209	1320	1434	1671
66	381	498	550	598	729	859	984	1101	1212	1498	1734	1951	2451	2739	3015	3367	3609	4273
	150	196	216	234	285	334	383	427	469	577	660	734	917	1016	1154	1261	1369	1596
67	370	484	535	582	708	835	957	1068	1194	1455	1683	1893	2379	2658	2925	3274	3501	4146
	144	188	207	224	273	320	367	408	455	552	631	701	876	971	1103	1205	1308	1525
68	361	472	520	567	688	813	930	1036	1176	1411	1633	1837	2308	2580	2839	3184	3399	4024
	138	180	198	215	261	307	351	390	441	528	603	671	838	929	1055	1152	1251	1458
69	351	459	507	552	670	792	904	1006	1158	1371	1585	1783	2242	2505	2757	3099	3300	3907
	132	173	190	207	251	295	336	373	428	505	577	642	802	889	1010	1103	1197	1396
70	342	447	493	537	652	771	880	978	1141	1332	1540	1732	2178	2433	2679	3016	3207	3796
	127	166	183	198	241	283	323	357	416	483	553	615	768	851	967	1056	1146	1336
71	333	436	481	523	636	750	856	949	1126	1294	1497	1684	2116	2365	2604	2937	3117	3690
	122	160	176	190	231	271	309	342	404	463	530	589	736	815	926	1012	1098	1280
72	325	424	469	510	619	730	834	924	1095	1258	1456	1638	2058	2299	2532	2860	3030	3586
	117	153	169	183	222	260	297	328	387	444	508	564	705	782	888	970	1053	1227
73	316	414	457	498	603	712	813	898	1065	1224	1416	1593	2002	2236	2461	2787	2947	3489
	112	147	162	176	213	250	285	315	371	426	487	541	677	750	852	930	1010	1177
74	309	403	445	484	588	694	792	874	1036	1191	1378	1549	1948	2176	2395	2716	2868	3394
	108	141	156	169	205	241	273	302	356	409	468	520	649	720	818	893	970	1130
75	301	394	435	472	573	676	772	850	1009	1159	1341	1509	1896	2118	2332	2647	2791	3304
	104	136	150	163	197	231	263	290	342	393	449	499	624	691	785	858	931	1085
76	294	384	424	462	559	660	753	828	982	1129	1306	1468	1846	2062	2271	2583	2718	3217
	100	131	144	157	189	223	252	279	329	377	431	480	599	664	754	824	895	1043
77	288	375	414	450	546	643	735	807	957	1099	1272	1431	1798	2008	2212	2520	2647	3135
	97	126	139	151	182	214	243	268	316	363	415	461	576	638	725	792	860	1003
78	280	366	403	439	532	628	717	786	933	1071	1239	1395	1752	1957	2155	2458	2580	3054
	93	122	134	145	176	207	233	258	304	349	399	443	554	614	698	762	827	964
79	274	358	393	429	519	613	699	766	909	1044	1209	1359	1708	1908	2101	2400	2514	2977
	90	118	129	140	169	199	225	248	292	336	384	427	533	591	671	733	796	928
80	267	349	382	418	507	598	682	747	886	1018	1177	1324	1665	1860	2049	2343	2452	2902
	86	113	124	135	163	192	216	239	282	323	370	411	513	569	646	706	767	893

LRFD

STANDARD LOAD TABLE/OPEN WEB STEEL JOISTS, LH-SERIES

Based on a 50 ksi Maximum Yield Strength - Loads Shown In Pounds Per Linear Foot (plf)

Joist Designation	44LH09	44LH10	44LH11	44LH12	44LH13	44LH14	44LH15	44LH16	44LH17	44LH18	44LH19	44LH20	44LH21	44LH22	44LH23	44LH24	44LH25
Depth (in.)	44	44	44	44	44	44	44	44	44	44	44	44	44	44	44	44	44
Approx. Wt. (lbs./ft.)	19	21	22	25	30	31	36	42	47	57	64	82	93	101	118	127	147
Span (ft.) ↓																	
44	877	967	1140	1345	1587	1890	2199	2595	2893	3582	4224						
	585	645	760	897	1058	1260	1466	1730	1929	2388	2816						
45	852	940	1107	1305	1539	1830	2130	2509	2799	3465	4077						
	568	627	738	870	1026	1220	1420	1673	1866	2310	2718						
46	828	913	1074	1266	1492	1773	2062	2428	2709	3352	3937						
	552	609	716	844	995	1182	1375	1619	1806	2235	2625						
47	805	888	1042	1228	1449	1719	1999	2350	2622	3246	3805						
	537	592	695	819	966	1146	1333	1567	1748	2164	2504						
48	783	864	1011	1192	1407	1666	1938	2277	2539	3142	3678						
	522	576	674	795	938	1111	1292	1518	1661	2095	2350						
49	762	840	982	1158	1365	1615	1879	2205	2460	3045	3556	4477					
	508	560	652	772	910	1077	1253	1460	1561	1984	2208	2762					
50	741	817	954	1125	1326	1567	1822	2136	2383	2950	3441	4332					
	494	545	613	750	884	1028	1194	1374	1468	1867	2077	2598					
51	721	795	927	1092	1288	1519	1768	2071	2310	2860	3330	4194					
	481	530	578	713	845	968	1125	1294	1383	1758	1957	2447					
52	702	774	900	1062	1252	1476	1717	2008	2239	2773	3225	4060	4470				
	458	504	545	672	797	913	1061	1220	1304	1658	1845	2308	2559				
53	682	753	874	1032	1216	1432	1666	1948	2172	2689	3124	3933	4330				
	432	476	514	635	753	862	1002	1152	1231	1566	1742	2179	2416				
54	664	733	850	1003	1183	1390	1618	1890	2109	2610	3027	3811	4197				
	409	450	486	600	711	815	947	1089	1164	1480	1646	2059	2283				
55	648	714	826	975	1150	1351	1572	1834	2046	2533	2934	3694	4068				
	387	426	460	568	673	771	896	1030	1101	1400	1558	1948	2160				
56	631	696	804	949	1119	1314	1528	1782	1987	2460	2845	3583	3945				
	366	403	436	538	637	730	848	976	1043	1326	1475	1845	2046				
57	615	678	783	924	1089	1276	1485	1731	1930	2389	2761	3477	3828	4486			
	347	382	413	510	604	692	804	925	989	1257	1398	1749	1939	2203			
58	598	660	762	898	1062	1242	1444	1681	1875	2322	2680	3373	3715	4333			
	329	363	392	484	573	657	763	878	938	1192	1327	1660	1840	2091			
59	583	643	741	874	1032	1207	1405	1633	1822	2257	2602	3276	3607	4186	4455		
	313	344	372	459	544	624	725	834	891	1133	1260	1576	1748	1986	2171		
60	568	627	721	852	1005	1174	1366	1588	1771	2194	2527	3181	3504	4047	4324		
	297	327	354	437	518	593	689	792	847	1077	1198	1498	1661	1887	2064		
61	555	612	703	829	978	1143	1330	1545	1723	2134	2455	3091	3405	3915	4198		
	283	312	337	415	492	564	655	754	806	1024	1140	1425	1580	1796	1963		
62	541	597	685	808	954	1113	1294	1503	1677	2076	2386	3004	3309	3789	4077		
	269	297	320	396	469	537	624	718	767	975	1085	1357	1505	1710	1869		
63	528	582	667	787	928	1083	1261	1462	1632	2020	2320	2922	3217	3669	3961	4398	
	257	283	305	377	447	512	595	684	731	929	1034	1293	1434	1629	1781	1936	
64	514	568	651	768	906	1056	1228	1423	1588	1966	2256	2841	3129	3555	3850	4260	
	245	270	291	359	426	488	567	652	697	886	986	1233	1367	1554	1699	1846	
65	502	555	634	748	883	1027	1197	1386	1546	1915	2196	2764	3043	3445	3744	4129	
	234	257	278	343	407	466	541	622	665	846	941	1177	1305	1483	1621	1762	
66	490	541	616	730	861	1002	1165	1350	1506	1866	2136	2691	2962	3342	3642	4005	
	223	246	265	328	388	445	517	594	635	807	898	1124	1246	1416	1548	1683	
67	478	528	598	712	840	976	1137	1315	1467	1818	2080	2619	2884	3241	3544	3885	
	213	235	254	313	371	425	494	568	607	772	859	1074	1191	1353	1479	1608	
68	468	516	582	694	819	952	1108	1282	1431	1771	2025	2550	2809	3147	3450	3771	4465
	204	225	243	299	355	406	472	543	581	738	821	1027	1139	1294	1415	1538	1793
69	456	504	565	678	799	928	1081	1249	1395	1726	1972	2484	2736	3055	3358	3663	4336
	195	215	232	286	340	389	452	520	556	706	786	983	1090	1238	1354	1471	1716
70	445	492	549	661	781	906	1054	1219	1359	1684	1918	2413	2667	2968	3271	3558	4213
	187	206	222	274	325	372	433	498	532	676	752	941	1043	1186	1296	1409	1643
71	436	481	534	646	762	883	1029	1188	1326	1642	1864	2344	2599	2884	3187	3457	4095
	179	197	213	263	312	357	415	477	510	648	721	902	1000	1136	1242	1350	1574
72	426	469	520	631	744	862	1005	1159	1294	1602	1813	2280	2533	2805	3105	3361	3981
	172	189	204	252	299	342	398	457	489	621	691	864	958	1089	1191	1294	1509
73	417	459	507	616	727	843	981	1131	1263	1564	1764	2218	2472	2728	3027	3270	3873
	165	181	196	242	287	328	381	439	469	596	663	829	919	1045	1142	1242	1448
74	408	450	487	603	715	823	958	1105	1185	1524	1716	2158	2410	2655	2952	3181	3768
	158	174	188	232	275	315	366	421	450	572	636	796	882	1003	1096	1192	1390
75	397	439	475	589	699	801	934	1078	1170	1483	1669	2100	2347	2584	2880	3097	3667
	152	168	181	224	265	302	352	405	438	549	611	764	847	963	1053	1144	1335
76	388	429	465	574	681	780	912	1051	1153	1444	1626	2046	2286	2517	2809	3016	3571
	146	162	175	215	254	291	339	390	426	528	587	734	814	925	1012	1100	1282
77	379	418	453	561	666	759	889	1026	1138	1407	1584	1992	2226	2451	2742	2938	3478
	141	155	168	207	246	279	326	375	415	507	564	706	783	889	973	1057	1233
78	370	408	442	547	649	739	868	1002	1125	1371	1543	1941	2169	2388	2677	2862	3390
	136	150	162	200	236	268	314	362	405	488	543	679	753	856	935	1017	1186
79	363	399	433	534	634	721	847	978	1098	1336	1504	1893	2115	2328	2614	2790	3304
	131	144	157	192	228	259	303	348	390	469	522	654	725	823	900	978	1141
80	354	390	423	520	619	703	826	955	1072	1303	1467	1845	2061	2269	2553	2721	3222
	127	139	151	185	220	249	292	336	376	452	503	629	698	793	867	942	1099
81	346	381	414	508	606	685	805	933	1048	1272	1431	1800	2011	2214	2494	2653	3142
	122	134	146	179	212	240	281	324	363	435	484	606	672	764	835	907	1058
82	339	373	403	496	592	669	786	912	1024	1240	1396	1756	1962	2160	2437	2589	3066
	118	130	140	172	205	231	271	313	351	420	467	584	648	736	805	875	1020
83	331	364	396	484	579	654	768	891	1000	1210	1362	1713	1914	2107	2382	2526	2992
	114	125	136	166	198	223	261	302	338	404	450	563	624	709	776	843	983
84	324	357	387	472	565	637	750	870	978	1182	1330	1672	1869	2058	2329	2466	2920
	110	121	131	160	191	215	252	291	327	390	434	543	602	684	748	813	948
85	316	349	378	462	553	622	732	852	957	1153	1299	1633	1825	2010	2278	2409	2853
	106	117	127	155	185	207	243	282	316	376	419	524	581	660	722	785	915
86	310	342	370	450	541	609	714	832	936	1126	1269	1596	1783	1963	2227	2353	2787
	103	113	123	149	179	200	234	272	305	363	404	506	561	637	697	758	884
87	303	334	363	439	529	594	699	814	915	1101	1239	1558	1741	1918	2179	2299	2722
	99	110	119	144	173	193	227	263	295	351	391	489	542	616	673	732	853
88	297	327	354	430	519	580	682	796	895	1077	1212	1524	1702	1875	2133	2247	2661
	96	106	115	139	167	187	219	255	285	339	377	472	523	595	650	707	824

LRFD

STANDARD LOAD TABLE/OPEN WEB STEEL JOISTS, LH-SERIES
Based on a 50 ksi Maximum Yield Strength - Loads Shown In Pounds Per Linerar Foot (plf)

Joist Designation	48LH10	48LH11	48LH12	48LH13	48LH14	48LH15	48LH16	48LH17	48LH18	48LH19	48LH20	48LH21	48LH22	48LH23	48LH24	48LH25
Depth (in.)	48	48	48	48	48	48	48	48	48	48	48	48	48	48	48	48
Approx. Wt. (lbs./ft.)	21	22	25	29	32	36	42	47	57	62	79	87	101	109	124	144
Span (ft.) ↓																
48	807	871	1134	1357	1653	1896	2242	2517	3211	3805						
	538	581	756	905	1102	1264	1495	1678	2141	2537						
49	787	849	1104	1320	1606	1843	2178	2443	3118	3687						
	525	566	736	880	1071	1229	1452	1629	2079	2458						
50	768	828	1075	1285	1561	1791	2113	2371	3028	3573						
	512	552	717	857	1041	1194	1409	1581	2019	2382						
51	748	807	1047	1252	1519	1741	2053	2304	2941	3465	4363					
	499	538	698	835	1013	1161	1369	1536	1961	2310	2909					
52	730	787	1020	1219	1477	1693	1995	2238	2857	3360	4231					
	487	525	680	813	985	1129	1330	1492	1905	2217	2776					
53	712	768	993	1188	1437	1648	1938	2175	2776	3259	4105					
	475	512	662	792	958	1099	1292	1450	1851	2093	2621					
54	694	750	967	1156	1398	1603	1884	2113	2698	3163	3984	4387				
	463	500	645	771	932	1069	1251	1399	1776	1978	2477	2747				
55	678	732	942	1126	1360	1560	1831	2055	2623	3070	3868	4260				
	452	488	628	751	897	1027	1184	1324	1681	1872	2344	2599				
56	661	714	918	1098	1324	1519	1782	1999	2551	2982	3757	4137				
	441	476	603	720	849	973	1121	1254	1592	1773	2220	2461				
57	646	697	895	1071	1290	1479	1732	1944	2482	2898	3649	4018				
	422	455	572	682	805	922	1063	1188	1509	1680	2104	2333				
58	630	681	873	1044	1255	1440	1686	1891	2416	2815	3547	3906				
	400	432	542	648	764	875	1008	1128	1432	1595	1997	2214				
59	615	664	850	1018	1222	1402	1641	1842	2352	2737	3448	3796	4483			
	380	410	515	615	726	831	958	1071	1360	1514	1896	2103	2390			
60	601	649	829	993	1192	1366	1597	1792	2289	2661	3352	3691	4359			
	362	390	490	585	690	790	910	1018	1293	1439	1803	1999	2272			
61	588	634	810	969	1161	1332	1555	1746	2229	2589	3261	3591	4240	4458		
	344	371	466	556	656	751	866	968	1230	1369	1715	1901	2161	2365		
62	573	619	790	945	1132	1299	1515	1701	2172	2518	3172	3493	4126	4335		
	327	353	444	530	625	715	825	922	1171	1304	1633	1810	2058	2252		
63	561	604	771	922	1104	1266	1476	1657	2116	2451	3088	3400	4017	4215		
	312	336	423	505	595	682	786	879	1116	1242	1556	1725	1961	2146		
64	547	591	753	900	1077	1234	1438	1615	2062	2386	3006	3310	3901	4101		
	298	321	403	481	568	650	749	838	1064	1185	1484	1645	1870	2046		
65	535	577	735	879	1050	1204	1402	1575	2010	2323	2928	3225	3781	3991		
	284	306	385	459	542	620	715	800	1015	1131	1416	1570	1784	1953		
66	523	565	717	858	1024	1176	1368	1536	1960	2263	2853	3141	3667	3885	4401	
	271	292	367	439	517	592	683	764	970	1080	1352	1499	1704	1865	2029	
67	511	552	700	838	1000	1147	1333	1497	1912	2206	2779	3060	3558	3783	4269	
	259	279	351	419	494	566	653	730	927	1032	1292	1433	1629	1782	1939	
68	501	540	684	819	976	1120	1302	1461	1866	2149	2709	2983	3454	3685	4144	
	248	267	336	401	473	541	624	698	886	987	1236	1370	1557	1704	1854	
69	489	528	669	799	952	1093	1270	1425	1821	2097	2641	2908	3354	3591	4024	
	237	256	321	384	453	518	597	668	848	944	1182	1311	1490	1631	1774	
70	478	516	654	781	931	1068	1239	1392	1777	2044	2575	2836	3258	3499	3909	
	227	245	308	367	433	496	572	640	812	904	1132	1255	1427	1562	1699	
71	468	505	639	765	909	1042	1210	1359	1735	1993	2512	2767	3166	3411	3799	4500
	218	235	295	352	415	475	548	613	778	866	1085	1203	1367	1496	1628	1899
72	457	495	624	747	888	1018	1182	1326	1693	1945	2451	2700	3079	3327	3694	4375
	209	225	283	337	398	456	525	587	746	831	1040	1153	1311	1434	1560	1821

LRFD

STANDARD LOAD TABLE/OPEN WEB STEEL JOISTS, LH-SERIES
Based on a 50 ksi Maximum Yield Strength - Loads Shown In Pounds Per Linerar Foot (plf)

Joist Designation	48LH10	48LH11	48LH12	48LH13	48LH14	48LH15	48LH16	48LH17	48LH18	48LH19	48LH20	48LH21	48LH22	48LH23	48LH24	48LH25
Depth (in.)	48	48	48	48	48	48	48	48	48	48	48	48	48	48	48	48
Approx. Wt. (lbs./ft.)	21	22	25	29	32	36	42	47	57	62	79	87	101	109	124	144
Span (ft.) ↓																
73	448	484	610	730	868	996	1153	1296	1654	1899	2392	2635	2995	3244	3594	4255
	200	216	271	324	382	437	504	564	715	797	998	1106	1257	1376	1497	1746
74	439	474	597	714	849	973	1128	1266	1617	1854	2335	2572	2914	3166	3496	4141
	192	207	260	311	367	420	484	541	687	765	958	1062	1207	1321	1437	1676
75	429	463	583	699	829	951	1101	1236	1579	1810	2280	2512	2836	3090	3403	4030
	184	199	250	298	352	403	464	519	659	734	920	1020	1159	1268	1380	1610
76	421	454	571	684	811	930	1077	1209	1543	1768	2227	2454	2761	3016	3313	3925
	177	191	240	287	338	387	446	499	634	706	884	980	1114	1219	1326	1547
77	412	445	559	669	793	910	1053	1182	1509	1726	2176	2397	2691	2946	3228	3823
	170	184	231	276	325	372	429	480	609	678	849	942	1071	1172	1275	1487
78	403	435	547	655	775	891	1029	1155	1476	1687	2127	2341	2622	2877	3145	3726
	164	177	222	265	313	358	413	462	586	652	817	906	1030	1127	1226	1430
79	396	426	535	642	759	871	1006	1129	1443	1650	2076	2289	2556	2811	3066	3631
	158	170	214	255	301	345	397	444	564	628	786	872	991	1084	1180	1376
80	387	418	525	628	742	852	984	1105	1411	1609	2025	2238	2491	2746	2989	3541
	152	164	206	246	290	332	382	428	543	604	757	839	954	1044	1136	1325
81	379	409	514	615	727	834	963	1081	1381	1569	1975	2188	2430	2685	2916	3453
	146	158	198	237	279	320	368	412	523	582	729	809	919	1006	1094	1277
82	369	399	504	603	712	817	943	1059	1351	1531	1926	2140	2371	2625	2845	3369
	141	152	191	228	269	308	355	397	504	561	703	779	886	969	1054	1230
83	361	390	493	589	696	799	922	1035	1323	1494	1881	2094	2314	2566	2776	3288
	136	147	185	221	260	298	343	383	486	541	677	751	854	934	1017	1186
84	354	382	483	576	681	781	901	1012	1296	1458	1836	2049	2259	2511	2710	3210
	132	142	179	213	251	287	331	371	468	522	653	725	824	901	981	1144
85	346	373	472	564	666	765	882	990	1264	1425	1792	2002	2206	2457	2647	3135
	127	137	173	206	243	278	320	358	452	504	631	699	795	870	946	1104
86	339	366	462	552	651	748	864	969	1236	1390	1750	1956	2154	2403	2586	3061
	123	133	167	199	234	269	310	346	436	486	609	675	767	840	913	1066
87	331	358	451	540	637	732	844	948	1207	1359	1710	1911	2104	2352	2526	2992
	119	129	161	193	227	260	299	335	421	469	588	652	741	811	882	1029
88	325	351	442	529	624	717	826	928	1179	1329	1672	1869	2058	2302	2469	2923
	116	125	156	187	220	252	289	324	407	454	568	630	716	783	852	994
89	318	343	433	517	610	702	810	909	1153	1299	1635	1827	2011	2254	2413	2859
	112	120	151	180	212	244	280	314	394	438	549	609	692	757	824	961
90	312	337	424	507	598	687	792	889	1128	1270	1597	1786	1966	2208	2359	2794
	108	117	147	175	206	236	271	304	381	424	531	589	669	732	797	929
91	306	330	415	498	585	672	777	871	1102	1242	1563	1746	1923	2163	2308	2733
	105	113	142	170	199	228	263	294	368	410	513	569	647	708	770	899
92	300	324	408	487	574	658	760	853	1078	1215	1528	1708	1881	2119	2257	2674
	102	110	138	164	193	221	255	285	356	397	497	551	626	685	745	870
93	294	318	399	477	562	645	745	837	1056	1189	1497	1672	1842	2077	2209	2617
	99	106	133	159	187	214	247	276	345	384	481	533	606	663	722	842
94	288	312	391	468	550	633	730	820	1033	1164	1464	1636	1801	2035	2163	2562
	96	103	129	154	181	208	239	268	334	372	466	516	587	642	699	815
95	282	306	384	459	540	619	715	804	1011	1138	1434	1602	1764	1995	2116	2508
	93	100	126	150	176	201	232	260	323	360	451	500	568	622	677	790
96	277	300	376	450	529	607	702	787	990	1116	1404	1569	1728	1956	2073	2455
	90	97	122	145	171	195	225	252	313	349	437	485	551	603	656	765

LRFD

METRIC LOAD TABLE/OPEN WEB STEEL JOISTS, LH-SERIES
Based on a 345 MPa Maximum Yield Strength - Loads Shown In Kilonewtons Per Meter (kN/m)

Joist Designation	18LH02	18LH03	18LH04	18LH05	18LH06	18LH07	18LH08	18LH09	18LH10	18LH11	18LH12	18LH13	18LH14	18LH15	18LH16	18LH17	18LH18	18LH19	18LH20
Depth (mm)	457	457	457	457	457	457	457	457	457	457	457	457	457	457	457	457	457	457	457
Approx. Wt. (kN/m)	0.15	0.16	0.18	0.21	0.22	0.25	0.28	0.31	0.34	0.37	0.42	0.49	0.54	0.58	0.65	0.74	0.85	0.92	1.24
Span (mm) ↓																			
5486	17.61	19.61	22.73	25.71	31.47	33.46	37.82	43.53	48.83	54.47	60.21								
	11.74	13.07	15.16	17.14	20.98	22.31	25.21	27.56	32.55	36.32	40.14								
5791	16.37	18.22	21.14	23.91	29.08	30.95	34.98	40.07	44.96	50.14	55.44								
	10.91	12.15	14.09	15.95	19.39	20.63	21.89	23.36	29.97	33.43	36.96								
6096	15.25	16.98	19.67	22.28	26.94	28.67	32.39	36.95	41.47	46.27	51.15	61.39							
	10.15	11.29	13.07	14.72	17.06	17.93	18.72	19.97	26.50	29.26	32.48	37.59							
6401	14.19	15.81	18.34	20.76	25.01	26.61	30.04	34.19	38.35	42.78	47.29	56.62	61.83						
	8.75	9.73	11.26	12.69	14.71	15.45	16.12	17.22	22.83	25.21	27.99	32.39	35.21						
6706	13.26	14.76	17.13	19.39	23.26	24.73	27.94	31.69	35.55	39.66	43.84	52.33	57.17	61.92					
	7.58	8.44	9.77	11.01	12.75	13.41	13.99	14.94	19.81	21.89	24.28	28.10	30.55	33.21					
7010	12.40	13.80	16.02	18.14	21.67	23.04	26.02	29.43	33.01	36.83	40.71	48.51	52.97	57.39					
	6.62	7.36	8.53	9.61	11.14	11.71	12.22	13.04	17.30	19.11	21.21	24.56	26.69	28.99					
7315	11.61	12.93	14.98	16.98	20.22	21.49	24.29	27.36	30.70	34.28	37.91	45.06	49.21	53.32	61.52				
	5.82	6.47	7.50	8.44	9.79	10.28	10.74	11.47	15.20	16.79	18.63	21.56	23.45	25.48	28.04				
7620	10.87	12.12	14.06	15.93	18.88	20.09	22.69	25.53	28.64	31.97	35.34	41.94	45.81	49.64	56.62	64.57			
	5.15	5.72	6.62	7.45	8.65	9.09	9.48	10.12	13.42	14.82	16.46	19.05	20.70	22.50	24.76	28.15			
7925	10.24	11.39	13.22	14.97	17.70	18.38	19.17	20.48	26.76	29.87	33.02	39.14	42.74	46.29	52.31	59.64			
	4.56	5.07	5.88	6.62	7.67	8.07	8.42	8.98	11.92	13.16	14.60	16.91	18.38	19.97	21.97	24.98			
8230	9.67	10.78	12.49	14.18	16.38	17.70	18.44	19.71	25.05	27.97	30.92	36.57	39.94	43.30	48.46	55.25	63.83		
	4.14	4.62	5.35	6.04	6.84	7.48	7.79	8.33	10.62	11.73	13.03	15.07	16.38	17.80	19.59	22.27	25.37		
8534	9.15	10.21	11.70	13.44	15.23	17.07	17.77	19.00	23.51	26.22	28.99	34.25	37.43	40.54	45.02	51.32	59.29		
	3.77	4.21	4.80	5.51	6.11	6.94	7.23	7.69	9.51	10.50	11.66	13.49	14.68	15.95	17.55	19.94	22.72		
8839	8.55	9.58	10.94	12.71	14.18	15.89	17.16	18.34	22.08	24.64	27.24	32.15	35.11	38.04	41.94	47.80	55.22	61.52	
	3.41	3.82	4.31	5.03	5.50	6.24	6.74	7.16	8.55	9.44	10.47	12.14	13.19	14.33	15.77	17.93	20.43	22.44	
9144	8.02	8.94	10.25	11.87	13.23	14.84	16.59	17.73	20.76	23.17	25.62	30.20	33.01	35.76	39.15	44.62	51.57	57.44	
	3.09	3.44	3.88	4.53	4.96	5.63	6.23	6.68	7.72	8.52	9.45	10.94	11.90	12.93	14.22	16.17	18.43	20.24	
9449	7.54	8.36	9.63	11.12	12.39	13.89	15.68	17.13	19.57	21.80	24.16	28.45	31.08	33.66	36.64	41.78	48.26	53.76	
	2.81	3.10	3.53	4.11	4.48	5.09	5.64	6.10	6.99	7.72	8.56	9.90	10.77	11.70	12.88	14.63	16.68	18.32	
9754	7.09	7.85	9.03	10.42	11.61	13.01	14.88	16.60	18.47	20.44	22.81	26.83	29.24	31.75	34.36	39.18	45.27	50.40	62.65
	2.55	2.83	3.19	3.73	4.08	4.62	5.12	5.54	6.34	7.00	7.77	9.00	9.79	10.63	11.70	13.29	15.14	16.65	20.46
10058	6.69	7.36	8.49	9.80	10.91	12.22	14.02	15.60	17.46	19.22	21.45	25.32	27.46	29.99	32.28	36.82	42.52	47.37	58.85
	2.33	2.58	2.91	3.40	3.70	4.20	4.67	5.04	5.77	6.37	7.07	8.20	8.91	9.69	10.66	12.11	13.80	15.16	18.63
10363	6.31	6.93	7.98	9.20	10.28	11.51	13.22	14.68	16.50	18.08	20.19	23.83	25.87	28.25	30.39	34.67	40.03	44.61	55.42
	2.14	2.34	2.65	3.09	3.38	3.85	4.26	4.61	5.28	5.82	6.46	7.48	8.14	8.84	9.73	11.06	12.60	13.84	17.03
10668	5.96	6.53	7.53	8.68	9.69	10.85	12.49	13.84	15.55	17.04	19.04	22.47	24.38	26.63	28.67	32.70	37.75	42.07	52.27
	1.97	2.15	2.43	2.84	3.09	3.51	3.89	4.21	4.83	5.34	5.92	6.85	7.45	8.09	8.91	10.14	11.54	12.68	15.58
10973	5.66	6.18	7.10	8.20	9.15	10.25	11.82	13.09	14.71	16.11	17.99	21.23	23.04	25.17	27.07	30.88	35.68	39.75	49.38
	1.80	1.98	2.23	2.61	2.84	3.23	3.59	3.88	4.43	4.90	5.44	6.30	6.84	7.44	8.18	9.31	10.60	11.64	14.31

LRFD

METRIC LOAD TABLE/OPEN WEB STEEL JOISTS, LH-SERIES
Based on a 345 MPa Maximum Yield Strength - Loads Shown In Kilonewtons Per Meter (kN/m)

Joist Designation	20LH02	20LH03	20LH04	20LH05	20LH06	20LH07	20LH08	20LH09	20LH10	20LH11	20LH12	20LH13	20LH14	20LH15	20LH16	20LH17	20LH18	20LH19	20LH20
Depth (mm)	508	508	508	508	508	508	508	508	508	508	508	508	508	508	508	508	508	508	508
Approx. Wt. (kN/m)	0.15	0.16	0.18	0.20	0.22	0.25	0.28	0.31	0.34	0.36	0.41	0.50	0.54	0.58	0.66	0.80	0.89	1.01	1.27
Span (mm) ↓																			
6096	15.58	18.09	19.92	23.20	26.83	31.23	33.93	38.76	41.85	50.58	55.92								
	9.92	10.93	13.28	14.88	17.89	20.82	21.70	23.64	25.49	33.72	37.28								
6401	14.66	16.73	18.62	21.67	25.08	29.04	31.56	35.91	38.79	46.86	51.80	62.31							
	8.55	9.42	11.96	12.82	16.72	18.08	18.70	20.37	21.97	31.24	34.54	40.83							
6706	13.71	15.64	17.42	20.28	23.43	27.05	29.39	33.36	36.00	43.51	48.11	57.70	63.01						
	7.42	8.17	10.39	11.13	14.69	15.70	16.22	17.68	19.07	27.50	30.54	35.43	38.52						
7010	12.84	14.66	16.33	18.92	21.99	25.26	27.45	31.04	33.49	40.49	44.75	53.55	58.49	63.36					
	6.47	7.13	9.06	9.71	12.84	13.70	14.17	15.44	16.65	24.03	26.67	30.95	33.65	36.58					
7315	12.05	13.76	15.32	17.74	20.62	23.61	25.65	28.93	31.21	37.73	41.72	49.82	54.42	58.94					
	5.69	6.27	7.96	8.53	11.28	12.03	12.44	13.57	14.63	21.11	23.43	27.18	29.56	32.13					
7620	11.31	12.91	14.40	16.54	19.39	22.12	24.00	27.01	29.15	35.24	38.96	46.42	50.71	54.94	63.78				
	5.03	5.54	7.03	7.54	9.96	10.63	11.00	11.98	12.93	18.65	20.69	24.02	26.10	28.38	31.27				
7925	9.67	10.25	12.56	13.48	17.99	19.22	19.87	21.67	23.37	32.96	36.44	43.35	47.37	51.31	58.90				
	4.46	4.91	6.24	6.69	8.84	9.44	9.76	10.63	11.47	16.54	18.37	21.32	23.17	25.18	27.75				
8230	9.55	10.12	12.39	13.32	17.30	18.49	19.10	20.85	22.50	30.88	34.16	40.55	44.32	48.02	54.56	62.30			
	4.42	4.85	5.92	6.37	8.18	8.74	9.03	9.85	10.56	14.75	16.38	19.00	20.66	22.46	24.75	28.16			
8534	9.42	10.02	12.21	13.17	16.69	17.81	18.43	20.09	21.68	28.99	32.06	38.01	41.54	45.00	50.69	57.87			
	4.34	4.62	5.63	6.07	7.60	8.11	8.39	9.13	9.82	13.20	14.66	17.01	18.50	20.11	22.16	25.21			
8839	8.97	9.89	11.55	13.01	15.81	17.20	17.78	19.39	20.92	27.27	30.16	35.72	39.00	42.26	47.21	53.90	62.27		
	3.99	4.40	5.13	5.76	6.96	7.55	7.82	8.47	9.13	11.87	13.19	15.29	16.63	18.08	19.92	22.67	25.84		
9144	8.49	9.50	10.85	12.49	14.85	16.63	17.17	18.73	20.22	25.67	28.41	33.59	36.70	39.76	44.08	50.31	58.15	64.89	
	3.64	4.08	4.67	5.34	6.23	7.06	7.29	7.90	8.53	10.71	11.89	13.80	15.00	16.31	17.97	20.46	23.32	25.67	
9449	7.98	9.06	10.21	11.90	13.89	15.55	16.63	18.12	19.57	24.22	26.79	31.65	34.58	37.47	41.25	47.10	54.42	60.73	
	3.32	3.76	4.24	4.91	5.63	6.39	6.82	7.39	7.95	9.70	10.77	12.49	13.58	14.76	16.27	18.51	21.11	23.23	
9754	7.53	8.63	9.63	11.22	13.04	14.59	15.80	17.55	18.92	22.86	25.30	29.85	32.63	35.34	38.70	44.17	51.04	56.95	
	3.03	3.47	3.86	4.49	5.12	5.80	6.24	6.93	7.44	8.81	9.77	11.35	12.34	13.41	14.78	16.81	19.17	21.10	
10058	7.10	8.14	9.10	10.59	12.25	13.71	15.03	17.03	18.35	21.58	23.94	28.21	30.83	33.40	36.35	41.50	47.95	53.54	
	2.77	3.18	3.54	4.10	4.67	5.28	5.76	6.37	6.99	8.02	8.90	10.33	11.23	12.21	13.45	15.32	17.46	19.22	
10363	6.71	7.70	8.59	10.02	11.52	12.91	14.31	16.52	17.81	20.31	22.67	26.70	29.08	31.61	34.23	39.06	45.15	50.39	62.75
	2.53	2.91	3.25	3.76	4.26	4.83	5.32	5.82	6.53	7.32	8.14	9.44	10.27	11.16	12.30	13.99	15.95	17.55	21.64
10668	6.36	7.28	8.14	9.50	10.87	12.17	13.58	15.58	17.30	19.14	21.38	25.27	27.45	29.96	32.28	36.86	42.59	47.51	59.19
	2.33	2.68	2.99	3.47	3.89	4.42	4.90	5.34	5.99	6.71	7.45	8.65	9.39	10.21	11.26	12.81	14.60	16.08	19.81
10973	6.01	6.91	7.72	8.98	10.25	11.51	12.87	14.72	16.37	18.09	20.19	23.87	25.91	28.32	30.51	34.82	40.23	44.89	55.90
	2.14	2.46	2.75	3.19	3.59	4.05	4.50	4.90	5.50	6.15	6.84	7.93	8.63	9.38	10.34	11.76	13.41	14.76	18.19
11278	5.73	6.53	7.32	8.53	9.71	10.87	12.21	13.92	15.46	17.11	19.10	22.60	24.53	26.79	28.86	32.93	38.06	42.48	52.90
	1.98	2.27	2.53	2.94	3.29	3.73	4.15	4.50	5.04	5.67	6.30	7.31	7.95	8.63	9.51	10.82	12.34	13.58	16.75
11582	5.44	6.18	6.96	8.11	9.20	10.30	11.60	13.19	14.66	16.21	18.12	21.42	23.24	25.39	27.33	31.21	36.07	40.24	50.13
	1.83	2.08	2.34	2.72	3.05	3.44	3.82	4.15	4.67	5.23	5.80	6.74	7.32	7.96	8.78	9.99	11.39	12.53	15.45
11887	5.18	5.88	6.62	7.72	8.72	9.77	11.00	12.52	13.92	15.38	17.17	20.32	22.06	24.09	25.96	29.61	34.23	38.19	47.56
	1.70	1.94	2.17	2.52	2.80	3.18	3.53	3.85	4.31	4.83	5.37	6.23	6.77	7.36	8.11	9.23	10.53	11.58	14.28
12192	4.91	5.57	6.31	7.35	8.28	9.29	10.47	11.90	13.22	14.62	16.33	19.30	20.94	22.89	24.66	28.15	32.52	36.29	45.19
	1.57	1.79	2.02	2.34	2.59	2.94	3.28	3.56	3.99	4.48	4.97	5.76	6.27	6.81	7.51	8.55	9.74	10.72	13.22

LRFD

METRIC LOAD TABLE/OPEN WEB STEEL JOISTS, LH-SERIES
Based on a 345 MPa Maximum Yield Strength - Loads Shown In Kilonewtons Per Meter (kN/m)

Joist Designation	24LH03	24LH04	24LH05	24LH06	24LH07	24LH08	24LH09	24LH10	24LH11	24LH12	24LH13	24LH14	24LH15	24LH16	24LH17	24LH18	24LH19	24LH20	24LH21
Depth (mm)	610	610	610	610	610	610	610	610	610	610	610	610	610	610	610	610	610	610	610
Approx. Wt. (kN/m)	0.16	0.18	0.19	0.23	0.25	0.26	0.31	0.34	0.36	0.39	0.47	0.51	0.55	0.61	0.72	0.83	0.90	1.15	1.28
Span (mm) ↓																			
7315	14.53	15.81	18.09	22.78	26.57	28.16	36.35	39.05	42.64	48.91	58.84	64.27							
	9.69	10.55	12.06	15.19	17.71	18.78	23.61	25.04	26.21	32.61	39.22	42.84							
7620	13.70	14.90	17.04	21.46	24.95	26.44	34.03	36.55	39.92	45.81	54.96	60.03	65.05						
	8.72	9.93	11.36	14.31	16.63	17.62	20.85	22.10	23.16	30.54	35.68	38.81	42.22						
7925	12.91	14.05	16.08	20.24	23.46	24.86	31.91	34.25	37.43	42.94	51.44	56.18	60.90						
	7.73	9.36	10.14	13.49	14.88	15.80	18.50	19.62	20.54	27.20	31.68	34.45	37.47						
8230	12.18	13.26	15.19	19.13	22.08	23.39	29.96	32.15	35.17	40.33	48.21	52.68	57.09						
	6.90	8.46	9.04	12.06	13.28	14.09	16.50	17.49	18.32	24.25	28.23	30.72	33.42						
8534	11.52	12.53	14.36	18.09	20.75	22.06	28.19	30.25	33.06	37.95	45.28	49.47	53.60	62.05					
	6.17	7.57	8.09	10.81	11.87	12.62	14.78	15.67	16.40	21.71	25.29	27.50	29.91	33.02					
8839	10.90	11.86	13.58	17.11	19.58	20.81	26.61	28.50	31.14	35.74	42.59	46.53	50.43	57.80					
	5.56	6.81	7.28	9.71	10.68	11.35	13.28	14.08	14.75	19.52	22.73	24.73	26.89	29.69					
9144	10.33	11.25	12.87	16.21	18.56	19.67	25.04	26.88	29.34	33.71	40.11	43.82	47.50	53.98	61.70				
	5.00	6.14	6.56	8.77	9.64	10.24	11.98	12.71	13.30	17.61	20.51	22.31	24.26	26.79	30.55				
9449	9.80	10.65	12.14	15.38	17.51	18.60	23.72	25.39	27.67	31.84	37.84	41.34	44.80	50.52	57.74				
	4.53	5.56	5.95	7.93	8.72	9.26	10.85	11.51	12.05	15.95	18.56	20.19	21.96	24.25	27.65				
9754	9.29	10.11	11.39	14.59	16.37	17.64	22.32	23.46	25.52	30.12	35.74	39.06	42.33	47.37	54.15	62.60			
	4.11	5.04	5.39	7.20	7.92	8.42	9.85	10.44	10.94	14.49	16.87	18.34	19.94	22.02	25.11	28.66			
10058	8.84	9.63	10.77	13.89	15.45	16.72	20.89	21.77	23.07	28.54	33.81	36.96	40.06	44.52	50.88	58.84			
	3.75	4.59	4.91	6.56	7.22	7.66	8.97	9.51	9.96	13.19	15.36	16.71	18.16	20.06	22.88	26.12			
10363	7.48	9.16	9.82	13.22	14.55	15.46	18.21	19.30	20.28	27.05	32.04	35.02	37.95	41.91	47.91	55.38	61.99		
	3.42	4.20	4.49	5.99	6.59	7.00	8.20	8.69	9.10	12.05	14.03	15.26	16.60	18.32	20.89	23.86	26.32		
10668	7.41	8.71	9.76	12.66	13.96	14.81	17.68	18.73	19.70	25.69	30.39	33.20	35.98	39.53	45.18	52.23	58.46		
	3.29	3.86	4.33	5.57	6.14	6.52	7.73	8.15	8.58	11.03	12.85	13.98	15.20	16.78	19.14	21.84	24.12		
10973	7.35	8.28	9.63	12.14	13.41	14.19	17.17	18.21	19.14	24.40	28.86	31.53	34.19	37.34	42.68	49.35	55.22		
	3.18	3.59	4.15	5.19	5.73	6.07	7.31	7.70	8.09	10.14	11.80	12.84	13.96	15.41	17.58	20.06	22.15		
11278	7.06	7.88	9.16	11.60	12.87	13.61	16.72	17.70	18.62	23.21	27.45	29.99	32.50	35.33	40.38	46.68	52.24	65.27	
	2.97	3.31	3.85	4.83	5.35	5.66	6.71	7.29	7.66	9.32	10.85	11.82	12.85	14.18	16.18	18.46	20.38	25.23	
11582	6.71	7.50	8.72	11.03	12.36	13.06	15.99	17.24	18.14	22.08	26.10	28.41	30.92	33.49	38.27	44.23	49.51	61.86	
	2.74	3.06	3.56	4.46	5.00	5.28	6.18	6.91	7.26	8.61	10.02	10.90	11.85	13.09	14.92	17.03	18.79	23.27	
11887	6.40	7.15	8.31	10.50	11.83	12.52	15.23	16.81	17.65	20.94	24.83	26.96	29.46	31.75	36.30	41.98	46.99	58.71	65.51
	2.55	2.84	3.29	4.14	4.67	4.93	5.73	6.40	6.88	7.95	9.26	10.06	10.96	12.09	13.79	15.74	17.38	21.51	23.80
12192	6.10	6.82	7.93	9.99	11.29	11.92	14.50	16.12	17.22	19.92	23.59	25.61	27.99	30.18	34.51	39.89	44.65	55.77	62.25
	2.36	2.65	3.06	3.83	4.33	4.58	5.29	5.92	6.55	7.36	8.58	9.32	10.14	11.20	12.78	14.57	16.09	19.92	22.03
12497	5.83	6.52	7.58	9.55	10.74	11.38	13.83	15.36	16.81	18.92	22.46	24.35	26.63	28.72	32.83	37.95	42.48	53.06	59.23
	2.21	2.46	2.86	3.57	4.02	4.26	4.91	5.51	6.10	6.82	7.95	8.65	9.41	10.39	11.86	13.52	14.94	18.49	20.46
12802	5.57	6.23	7.23	9.12	10.24	10.87	13.17	14.62	16.06	18.03	21.38	23.21	25.36	27.36	31.27	36.16	40.46	50.53	56.43
	2.05	2.30	2.65	3.32	3.75	3.96	4.56	5.12	5.66	6.34	7.39	8.05	8.75	9.66	11.01	12.57	13.89	17.19	19.01
13106	5.34	5.96	6.93	8.72	9.76	10.39	12.56	13.93	15.33	17.20	20.40	22.12	24.18	26.09	29.82	34.47	38.58	48.20	53.80
	1.92	2.15	2.49	3.07	3.48	3.70	4.26	4.75	5.26	5.92	6.88	7.50	8.15	9.00	10.27	11.71	12.93	16.00	17.71
13411	5.12	5.73	6.65	8.33	9.32	9.95	11.99	13.30	14.68	16.43	19.48	21.14	23.08	24.91	28.47	32.92	36.83	46.02	51.37
	1.80	2.01	2.33	2.87	3.25	3.47	3.96	4.43	4.91	5.51	6.42	6.99	7.60	8.39	9.57	10.93	12.06	14.92	16.52
13716	4.90	5.48	6.36	7.96	8.90	9.51	11.47	12.74	14.05	15.68	18.60	20.19	22.08	23.81	27.20	31.44	35.21	43.97	49.09
	1.69	1.89	2.18	2.68	3.03	3.23	3.70	4.15	4.59	5.15	6.01	6.53	7.10	7.85	8.94	10.21	11.26	13.95	15.44
14021	4.69	5.26	6.12	7.61	8.50	9.12	10.96	12.17	13.48	15.01	17.78	19.32	21.11	22.78	26.05	30.09	33.68	42.07	46.97
	1.59	1.78	2.05	2.51	2.84	3.03	3.47	3.88	4.29	4.83	5.61	6.11	6.65	7.34	8.37	9.55	10.55	13.06	14.44
14326	4.52	5.04	5.88	7.31	8.15	8.75	10.50	11.66	12.91	14.37	17.04	18.49	20.22	21.80	24.92	28.82	32.26	40.29	44.97
	1.48	1.66	1.92	2.34	2.65	2.86	3.25	3.63	4.02	4.52	5.26	5.73	6.23	6.87	7.85	8.96	9.88	12.22	13.52
14630	4.34	4.85	5.64	7.00	7.80	8.40	10.06	11.17	12.40	13.79	16.34	17.73	19.39	20.89	23.90	27.62	30.90	38.61	43.09
	1.40	1.56	1.80	2.21	2.49	2.68	3.05	3.41	3.77	4.24	4.94	5.37	5.85	6.45	7.35	8.40	9.28	11.48	12.69

LRFD

METRIC LOAD TABLE/OPEN WEB STEEL JOISTS, LH-SERIES
Based on a 345 MPa Maximum Yield Strength - Loads Shown In Kilonewtons Per Meter (kN/m)

Joist Designation	28LH05	28LH06	28LH07	28LH08	28LH09	28LH10	28LH11	28LH12	28LH13	28LH14	28LH15	28LH16	28LH17	28LH18	28LH19	28LH20	28LH21	28LH22	28LH23
Depth (mm)	711	711	711	711	711	711	711	711	711	711	711	711	711	711	711	711	711	711	711
Approx. Wt. (kN/m)	0.19	0.23	0.25	0.26	0.31	0.34	0.36	0.39	0.44	0.51	0.55	0.61	0.72	0.82	0.92	1.15	1.28	1.49	1.62
Span (mm) ↓																			
8534	13.70	18.18	21.19	22.67	29.37	31.47	34.36	40.24	44.52	53.82	58.33								
	9.13	12.12	14.12	15.11	19.58	20.98	22.91	26.83	28.37	35.88	38.89								
8839	13.04	17.30	20.13	21.51	27.81	29.81	32.54	38.10	42.07	50.87	55.12	64.84							
	8.69	11.54	13.42	14.34	18.54	19.87	21.70	24.43	25.49	33.91	36.74	41.43							
9144	12.43	16.52	19.13	20.44	26.35	28.25	30.83	36.13	39.79	48.13	52.15	61.25							
	8.28	11.01	12.75	13.63	17.30	18.84	20.13	22.03	22.99	31.08	33.81	37.37							
9449	11.86	15.76	18.18	19.45	25.01	26.80	29.26	34.28	37.69	45.59	49.40	57.93							
	7.90	10.50	11.93	12.74	15.67	17.06	18.22	19.94	20.82	28.13	30.61	33.84							
9754	11.31	15.03	17.30	18.51	23.74	25.45	27.80	32.57	35.74	43.22	46.84	54.87	63.22						
	7.28	9.60	10.84	11.57	14.22	15.49	16.54	18.12	18.91	25.55	27.80	30.73	35.11						
10058	10.81	14.36	16.47	17.64	22.59	24.21	26.41	30.95	33.93	41.03	44.48	52.02	59.93						
	6.62	8.75	9.88	10.53	12.95	14.11	15.07	16.50	17.23	23.27	25.32	27.99	31.98						
10363	10.33	13.71	15.71	16.81	21.49	23.02	25.14	29.46	32.26	39.00	42.26	49.40	56.74	64.27					
	6.05	7.99	9.01	9.63	11.83	12.88	13.77	15.07	15.74	21.26	23.13	25.56	29.21	33.36					
10668	9.86	13.13	14.98	16.03	20.46	21.93	23.94	28.06	30.69	37.09	40.20	46.77	53.51	61.09					
	5.54	7.32	8.26	8.81	10.84	11.80	12.62	13.80	14.41	19.48	21.19	23.42	26.76	30.55					
10973	9.45	12.56	14.31	15.32	19.52	20.92	22.82	26.76	29.21	35.33	38.30	44.17	50.56	58.11	65.55				
	5.09	6.72	7.58	8.09	9.95	10.84	11.58	12.68	13.23	17.89	19.45	21.51	24.57	28.06	31.04				
11278	9.06	12.03	13.67	14.63	18.62	19.96	21.80	25.52	27.84	33.68	36.51	41.81	47.85	55.31	62.00				
	4.68	6.18	6.97	7.45	9.16	9.98	10.66	11.67	12.18	16.46	17.90	19.78	22.62	25.83	28.57				
11582	8.66	11.52	13.09	14.01	17.78	19.05	20.81	24.37	26.57	32.13	34.82	39.62	45.32	52.42	58.76				
	4.31	5.70	6.43	6.87	8.44	9.20	9.83	10.77	11.23	15.17	16.52	18.25	20.85	23.81	26.35				
11887	8.31	11.04	12.53	13.39	17.00	18.22	19.89	23.30	25.39	30.69	33.27	37.57	43.00	49.75	55.77				
	3.99	5.28	5.95	6.34	7.82	8.50	9.09	9.95	10.39	14.03	15.26	16.88	19.27	22.02	24.37				
12192	7.98	10.60	12.01	12.84	16.25	17.43	19.04	22.29	24.25	29.33	31.80	35.72	40.86	47.25	52.99				
	3.70	4.88	5.51	5.88	7.23	7.88	8.42	9.22	9.61	13.00	14.14	15.63	17.86	20.40	22.56				
12497	7.66	10.20	11.51	12.30	15.49	16.69	18.22	21.36	23.20	28.06	30.42	33.98	38.89	44.97	50.40	63.13			
	3.44	4.53	5.12	5.45	6.71	7.31	7.82	8.55	8.93	12.06	13.11	14.50	16.57	18.92	20.94	26.00			
12802	7.36	9.80	11.04	11.82	14.59	15.95	17.07	18.75	19.58	26.88	29.12	32.36	37.03	42.83	48.02	60.12			
	3.19	4.21	4.75	5.07	6.24	6.80	7.26	7.95	8.30	11.22	12.20	13.48	15.41	17.60	19.46	24.18			
13106	7.06	9.38	10.59	11.31	13.98	15.41	16.68	18.31	19.13	25.75	27.90	30.86	35.33	40.84	45.79	57.35	64.02		
	2.99	3.94	4.45	4.74	5.83	6.40	6.93	7.58	7.92	10.44	11.36	12.56	14.34	16.38	18.14	22.51	24.92		
13411	6.78	9.01	10.15	10.85	13.39	14.85	16.11	17.90	18.69	24.70	26.76	29.46	33.72	39.00	43.73	54.74	61.13		
	2.80	3.69	4.15	4.45	5.47	6.04	6.53	7.23	7.55	9.74	10.59	11.71	13.38	15.29	16.91	21.00	23.24		
13716	6.49	8.63	9.73	10.39	12.82	14.24	15.55	17.51	18.27	23.70	25.69	28.16	32.23	37.27	41.78	52.31	58.41	64.27	
	2.62	3.47	3.89	4.15	5.12	5.66	6.17	6.94	7.22	9.10	9.90	10.94	12.50	14.28	15.80	19.62	21.73	24.63	
14021	6.26	8.28	9.34	9.98	12.31	13.67	14.92	17.11	17.86	22.76	24.69	26.94	30.83	35.65	39.98	50.05	55.88	61.46	
	2.46	3.25	3.66	3.91	4.80	5.31	5.79	6.62	6.88	8.52	9.26	10.24	11.70	13.36	14.78	18.35	20.32	23.04	
14326	6.01	7.96	8.97	9.58	11.82	13.13	14.33	16.76	17.48	21.86	23.72	25.80	29.52	34.14	38.27	47.94	53.51	58.85	
	2.32	3.05	3.44	3.67	4.50	4.99	5.44	6.34	6.59	7.98	8.68	9.60	10.96	12.52	13.86	17.20	19.04	21.59	
14630	5.79	7.66	8.62	9.19	11.35	12.60	13.76	16.12	17.11	20.97	22.82	24.73	28.29	32.71	36.68	45.94	51.31	56.43	64.57
	2.18	2.87	3.23	3.44	4.24	4.69	5.12	5.95	6.31	7.48	8.14	9.00	10.28	11.74	13.00	16.14	17.87	20.27	22.03
14935	5.57	7.36	8.28	8.81	10.91	12.12	13.23	15.51	16.76	20.11	21.97	23.72	27.14	31.39	35.20	44.08	49.21	54.12	62.08
	2.07	2.71	3.05	3.23	3.99	4.42	4.83	5.58	6.05	7.03	7.66	8.46	9.67	11.04	12.21	15.17	16.79	19.04	20.70
15240	5.35	7.09	7.98	8.46	10.52	11.66	12.74	14.92	16.43	19.30	21.10	22.78	26.06	30.13	33.79	42.30	47.25	51.96	59.68
	1.94	2.55	2.87	3.05	3.76	4.15	4.55	5.26	5.77	6.62	7.19	7.96	9.09	10.39	11.49	14.27	15.80	17.92	19.48
15545	5.18	6.84	7.70	8.11	10.12	11.22	12.27	14.36	15.80	18.56	20.27	21.89	25.04	28.95	32.48	40.67	45.40	49.92	57.45
	1.83	2.42	2.71	2.86	3.54	3.92	4.29	4.96	5.44	6.23	6.78	7.50	8.56	9.77	10.82	13.44	14.88	16.87	18.34
15850	4.99	6.58	7.41	7.80	9.76	10.82	11.82	13.83	15.19	17.83	19.49	21.05	24.09	27.85	31.23	39.09	43.66	48.02	55.35
	1.73	2.27	2.56	2.69	3.32	3.72	4.05	4.68	5.13	5.88	6.39	7.07	8.08	9.22	10.21	12.68	14.03	15.90	17.30
16154	4.81	6.36	7.15	7.53	9.41	10.43	11.39	13.32	14.62	17.16	18.75	20.24	23.17	26.80	30.04	37.62	42.03	46.20	53.34
	1.64	2.15	2.42	2.55	3.15	3.51	3.83	4.42	4.84	5.54	6.04	6.66	7.63	8.71	9.63	11.96	13.25	15.01	16.33
16459	4.65	6.14	6.91	7.23	9.07	10.06	10.98	12.84	14.06	16.52	18.08	19.49	22.32	25.83	28.93	36.25	40.46	44.49	51.45
	1.56	2.04	2.30	2.40	2.97	3.32	3.63	4.15	4.58	5.23	5.70	6.30	7.20	8.23	9.10	11.31	12.52	14.19	15.44
16764	4.50	5.92	6.66	6.97	8.77	9.71	10.60	12.39	13.57	15.93	17.42	18.79	21.51	24.88	27.90	34.93	39.00	42.90	49.66
	1.48	1.94	2.18	2.27	2.81	3.13	3.44	3.94	4.33	4.96	5.39	5.96	6.81	7.79	8.62	10.69	11.85	13.44	14.60
17069	4.34	5.73	6.45	6.74	8.46	9.38	10.24	11.95	13.09	15.36	16.78	18.12	20.75	23.99	26.89	33.68	37.60	41.37	47.95
	1.41	1.83	2.07	2.15	2.67	2.97	3.25	3.73	4.10	4.69	5.10	5.64	6.46	7.36	8.15	10.14	11.22	12.72	13.83

LRFD

METRIC LOAD TABLE/OPEN WEB STEEL JOISTS, LH-SERIES
Based on a 345 MPa Maximum Yield Strength - Loads Shown In Kilonewtons Per Meter (kN/m)

Joist Designation	32LH06	32LH07	32LH08	32LH09	32LH10	32LH11	32LH12	32LH13	32LH14	32LH15	32LH16	32LH17	32LH18	32LH19	32LH20	32LH21	32LH22	32LH23	32LH24
Depth (mm)	813	813	813	813	813	813	813	813	813	813	813	813	813	813	813	813	813	813	813
Approx. Wt. (kN/m)	0.20	0.23	0.25	0.31	0.31	0.35	0.39	0.44	0.48	0.51	0.61	0.72	0.82	0.90	1.14	1.27	1.47	1.61	1.81
Span (mm) ↓																			
9754	14.33	16.08	18.14	24.05	25.91	28.37	33.31	39.15	41.94	44.87	58.90								
	9.55	10.72	12.09	16.03	17.27	18.91	22.21	26.10	27.96	29.91	39.27								
10058	13.76	15.42	17.35	22.95	24.75	27.10	31.80	37.31	39.98	42.77	56.05	64.59							
	9.17	10.28	11.57	15.30	16.50	18.06	21.20	24.88	26.66	27.29	37.25	42.61							
10363	13.23	14.84	16.63	21.94	23.64	25.88	30.38	35.60	38.13	40.80	53.41	61.55							
	8.82	9.89	11.09	14.63	15.76	17.26	20.25	23.42	24.12	24.92	34.03	38.93							
10668	12.71	14.24	15.93	20.98	22.60	24.75	29.07	33.98	36.39	38.93	50.91	58.68							
	8.47	9.50	10.62	13.68	15.07	16.50	19.30	21.45	22.09	22.82	31.17	35.65							
10973	12.22	13.70	15.27	20.06	21.64	23.68	27.81	32.48	34.77	37.21	48.59	55.99	63.26						
	8.15	9.13	10.05	12.56	13.86	15.17	17.73	19.70	20.30	20.97	28.61	32.74	37.40						
11278	11.74	13.17	14.66	19.22	20.72	22.67	26.63	31.05	33.24	35.59	46.40	53.47	60.41						
	7.64	8.52	9.25	11.57	12.76	13.96	16.31	18.14	18.68	19.29	26.34	30.13	34.42						
11582	11.31	12.69	14.06	18.43	19.84	21.73	25.52	29.72	31.82	34.03	44.35	51.10	57.74						
	7.06	7.86	8.53	10.66	11.77	12.88	15.06	16.72	17.23	17.80	24.29	27.80	31.75						
11887	10.90	12.21	13.49	17.65	19.04	20.84	24.47	28.45	30.47	32.61	42.42	48.90	55.25	63.26					
	6.52	7.26	7.88	9.86	10.88	11.90	13.92	15.46	15.92	16.44	22.46	25.69	29.36	32.54					
12192	10.47	11.77	12.97	16.94	18.25	19.97	23.48	27.27	29.20	31.23	40.62	46.81	52.88	60.47					
	6.04	6.72	7.31	9.13	10.08	11.03	12.88	14.31	14.75	15.23	20.81	23.80	27.18	30.15					
12497	10.11	11.33	12.47	16.25	17.52	19.19	22.54	26.15	27.99	29.96	38.92	44.84	50.67	57.87					
	5.60	6.24	6.78	8.47	9.35	10.23	11.96	13.29	13.68	14.14	19.30	22.08	25.23	27.97					
12802	9.73	10.91	12.01	15.63	16.85	18.43	21.64	25.08	26.88	28.76	37.31	42.81	48.59	55.42					
	5.21	5.80	6.30	7.88	8.69	9.51	11.12	12.36	12.72	13.14	17.95	20.53	23.46	26.00					
13106	9.41	10.55	11.55	15.03	16.19	17.73	20.81	24.09	25.80	27.62	35.65	40.81	46.62	53.01					
	4.85	5.41	5.86	7.34	8.09	8.85	10.36	11.51	11.85	12.24	16.72	19.11	21.84	24.22					
13411	9.06	10.17	11.13	14.44	15.58	17.04	20.02	23.16	24.79	26.53	34.03	38.98	44.78	50.61	63.48				
	4.52	5.04	5.47	6.84	7.55	8.27	9.66	10.74	11.06	11.42	15.60	17.83	20.38	22.59	28.12				
13716	8.75	9.82	10.72	13.92	14.98	16.41	19.26	22.25	23.83	25.52	32.52	37.25	43.03	48.37	60.65				
	4.23	4.71	5.12	6.40	7.06	7.72	9.03	10.02	10.33	10.66	14.56	16.66	19.04	21.11	26.28				
14021	8.44	9.47	10.34	13.39	14.44	15.80	18.56	21.42	22.94	24.56	31.12	35.63	41.21	46.27	58.02	64.81			
	3.95	4.40	4.78	5.98	6.61	7.22	8.44	9.38	9.67	9.98	13.63	15.60	17.81	19.76	24.59	27.23			
14326	8.15	9.16	9.98	12.91	13.92	15.23	17.87	20.63	22.08	23.64	29.78	34.12	39.46	44.32	55.57	62.05			
	3.70	4.13	4.48	5.61	6.18	6.77	7.90	8.80	9.06	9.35	12.76	14.60	16.69	18.50	23.04	25.52			
14630	7.89	8.85	9.63	12.39	13.41	14.68	17.24	19.87	21.27	22.76	28.56	32.70	37.84	42.46	53.25	59.49	65.45		
	3.48	3.88	4.20	5.26	5.80	6.36	7.42	8.26	8.50	8.78	11.98	13.71	15.67	17.36	21.62	23.94	27.17		
14935	7.63	8.55	9.29	11.90	12.93	14.15	16.63	19.14	20.50	21.94	27.40	31.39	36.29	40.76	51.09	57.06	62.79		
	3.26	3.64	3.95	4.94	5.45	5.96	6.97	7.74	7.98	8.24	11.26	12.88	14.72	16.31	20.31	22.50	25.53		
15240	7.39	8.28	8.98	11.29	12.49	13.67	16.06	17.87	18.44	19.04	26.31	30.12	34.85	39.11	49.05	54.78	60.28		
	3.07	3.42	3.72	4.65	5.13	5.61	6.56	7.29	7.51	7.76	10.59	12.12	13.84	15.35	19.11	21.17	24.02		
15545	7.13	8.01	8.68	10.90	12.03	13.17	15.58	17.52	18.08	18.66	25.27	28.95	33.49	37.57	47.15	52.64	57.93	65.33	
	2.90	3.25	3.53	4.40	4.84	5.29	6.24	7.00	7.22	7.45	9.98	11.41	13.04	14.46	18.00	19.93	22.62	24.64	
15850	6.88	7.72	8.37	10.50	11.61	12.69	15.06	17.17	17.73	18.31	24.31	27.84	32.19	36.16	45.32	50.62	55.70	62.97	
	2.75	3.07	3.34	4.15	4.59	5.00	5.92	6.72	6.94	7.18	9.41	10.77	12.30	13.64	16.97	18.79	21.33	23.24	
16154	6.65	7.45	8.07	10.12	11.20	12.25	14.53	16.87	17.39	17.96	23.39	26.79	30.99	34.77	43.62	48.72	53.60	60.73	63.93
	2.61	2.91	3.15	3.94	4.33	4.74	5.60	6.47	6.68	6.90	8.88	10.17	11.61	12.87	16.02	17.74	20.13	21.94	23.75
16459	6.43	7.19	7.80	9.77	10.82	11.83	14.02	16.24	17.07	17.61	22.51	25.80	29.85	33.50	42.03	46.93	51.63	58.63	61.57
	2.46	2.75	2.99	3.73	4.11	4.49	5.31	6.12	6.42	6.62	8.39	9.60	10.97	12.17	15.14	16.78	19.04	20.73	22.46
16764	6.21	6.96	7.54	9.45	10.46	11.42	13.54	15.64	16.76	17.30	21.71	24.86	28.76	32.28	40.49	45.22	49.75	56.62	59.33
	2.34	2.61	2.83	3.54	3.89	4.26	5.03	5.79	6.08	6.39	7.93	9.09	10.39	11.51	14.33	15.87	18.00	19.61	21.24
17069	6.01	6.74	7.28	9.15	10.11	11.04	13.09	15.10	16.15	16.98	20.94	23.99	27.72	31.14	39.05	43.62	47.98	54.69	57.22
	2.23	2.48	2.68	3.35	3.70	4.04	4.77	5.48	5.76	6.15	7.53	8.61	9.83	10.90	13.57	15.03	17.06	18.57	20.12
17374	5.82	6.52	7.04	8.84	9.73	10.68	12.65	14.57	15.60	16.69	20.19	23.13	26.76	30.04	37.69	42.08	46.32	52.88	55.22
	2.11	2.36	2.55	3.19	3.50	3.83	4.53	5.16	5.45	5.93	7.13	8.15	9.32	10.33	12.87	14.25	16.17	17.61	19.07
17678	5.61	6.30	6.82	8.55	9.41	10.34	12.22	14.06	15.06	16.41	19.49	22.34	25.84	29.02	36.38	40.64	44.71	51.15	53.32
	2.01	2.24	2.43	3.03	3.32	3.66	4.30	4.90	5.18	5.73	6.77	7.74	8.84	9.80	12.21	13.52	15.33	16.71	18.09
17983	5.44	6.10	6.61	8.28	9.10	10.02	11.83	13.58	14.55	15.86	18.84	21.58	24.97	28.03	35.15	39.27	43.21	49.51	51.53
	1.91	2.13	2.32	2.88	3.16	3.48	4.10	4.65	4.91	5.45	6.42	7.35	8.40	9.31	11.58	12.84	14.57	15.87	17.19
18288	5.29	5.92	6.40	8.02	8.80	9.69	11.47	13.13	14.06	15.33	18.22	20.88	24.13	27.10	33.98	37.95	41.76	47.94	49.79
	1.82	2.04	2.20	2.75	3.00	3.31	3.89	4.43	4.68	5.18	6.11	6.99	7.98	8.85	11.01	12.20	13.84	15.09	16.34
18593	5.12	5.73	6.21	7.79	8.50	9.38	11.12	12.71	13.61	14.84	17.61	20.18	23.35	26.22	32.88	36.73	40.41	46.45	48.17
	1.73	1.94	2.10	2.62	2.86	3.15	3.72	4.20	4.43	4.93	5.80	6.65	7.60	8.42	10.47	11.61	13.17	14.36	15.54
18898	4.96	5.56	6.01	7.54	8.23	9.10	10.77	12.30	13.17	14.36	17.04	19.54	22.60	25.36	31.82	35.55	39.09	45.02	46.62
	1.66	1.85	1.99	2.51	2.71	3.00	3.54	4.01	4.23	4.69	5.53	6.33	7.23	8.01	9.98	11.06	12.55	13.67	14.79
19202	4.81	5.39	5.83	7.32	7.96	8.81	10.43	11.90	12.75	13.89	16.52	18.91	21.89	24.57	30.82	34.41	37.87	43.65	45.15
	1.57	1.76	1.91	2.39	2.59	2.86	3.38	3.82	4.02	4.46	5.26	6.02	6.88	7.64	9.51	10.53	11.95	13.01	14.09
19507	4.68	5.25	5.66	7.10	7.72	8.53	10.12	11.52	12.34	13.48	15.99	18.31	21.20	23.81	29.85	33.33	36.68	42.33	43.73
	1.51	1.69	1.82	2.29	2.46	2.72	3.22	3.63	3.85	4.26	5.02	5.74	6.56	7.28	9.07	10.04	11.39	12.41	13.45

LRFD

METRIC LOAD TABLE/OPEN WEB STEEL JOISTS, LH-SERIES
Based on a 345 MPa Maximum Yield Strength - Loads Shown In Kilonewtons Per Meter (kN/m)

Joist Designation	36LH07	36LH08	36LH09	36LH10	36LH11	36LH12	36LH13	36LH14	36LH15	36LH16	36LH17	36LH18	36LH19	36LH20	36LH21	36LH22	36LH23	36LH24	36LH25
Depth (mm)	914	914	914	914	914	914	914	914	914	914	914	914	914	914	914	914	914	914	914
Approx. Wt. (kN/m)	0.23	0.26	0.31	0.31	0.34	0.36	0.44	0.53	0.53	0.64	0.72	0.85	0.93	1.18	1.34	1.46	1.78	1.90	2.17
Span (mm) ↓																			
10973	12.74	14.62	18.62	22.02	23.29	27.85	33.55	36.96	40.01	51.23	59.07								
	8.49	9.74	12.41	14.68	15.52	18.57	22.37	24.64	26.67	34.16	39.38								
11278	12.30	14.09	17.95	21.16	22.37	26.79	32.19	35.47	38.39	49.09	56.60	63.93							
	8.20	9.39	11.96	14.11	14.91	17.86	21.46	23.65	25.59	32.73	37.73	42.62							
11582	11.87	13.57	17.07	20.32	21.51	25.75	30.90	34.06	36.86	47.06	54.26	61.29							
	7.92	9.04	11.38	13.55	14.34	17.17	20.60	22.70	24.57	31.21	35.74	40.84							
11887	11.48	13.09	16.68	19.57	20.70	24.78	29.69	32.70	35.39	45.15	52.05	58.81							
	7.66	8.72	11.12	13.04	13.80	16.52	19.80	21.80	23.23	28.85	33.04	37.75							
12192	11.12	12.60	16.08	18.82	19.92	23.86	28.54	31.43	34.01	43.34	49.96	56.44	65.36						
	7.41	8.40	10.72	12.24	13.28	15.87	18.60	20.44	21.52	26.72	30.60	34.96	38.83						
12497	10.74	12.17	15.54	18.14	19.17	22.95	27.45	30.22	32.70	41.63	47.99	54.21	62.66						
	7.16	8.07	10.27	11.35	12.36	14.72	17.26	18.97	19.97	24.79	28.39	32.45	36.03						
12802	10.39	11.74	14.98	17.46	18.47	22.12	26.40	29.08	31.47	40.01	46.14	52.11	60.15						
	6.84	7.50	9.55	10.56	11.48	13.68	16.05	17.64	18.56	23.05	26.40	30.18	33.49						
13106	10.06	11.33	14.46	16.82	17.81	21.32	25.40	27.99	30.29	38.48	44.36	50.13	57.74						
	6.37	6.99	8.90	9.83	10.69	12.75	14.95	16.43	17.29	21.46	24.59	28.10	31.20						
13411	9.73	10.94	13.98	16.24	17.17	20.57	24.47	26.96	29.17	37.03	42.68	48.24	55.48						
	5.95	6.52	8.30	9.17	9.98	11.89	13.95	15.32	16.14	20.02	22.94	26.21	29.10						
13716	9.42	10.59	13.52	15.67	16.56	19.84	23.59	25.97	28.12	35.65	41.11	46.45	53.34						
	5.56	6.08	7.76	8.56	9.32	11.12	13.03	14.31	15.07	18.70	21.42	24.48	27.18						
14021	9.12	10.21	13.06	15.11	15.99	19.14	22.73	25.05	27.11	34.33	39.59	44.74	51.32	64.54					
	5.19	5.70	7.25	8.02	8.72	10.40	12.20	13.39	14.11	17.51	20.05	22.91	25.45	31.72					
14326	8.84	9.89	12.65	14.59	15.45	18.49	21.93	24.16	26.15	33.09	38.17	43.12	49.42	62.14					
	4.87	5.34	6.80	7.51	8.17	9.74	11.42	12.55	13.22	16.40	18.78	21.48	23.84	29.74					
14630	8.58	9.55	12.22	14.11	14.92	17.86	21.16	23.33	25.23	31.93	36.82	41.59	47.60	59.86					
	4.56	5.02	6.37	7.04	7.67	9.15	10.72	11.77	12.40	15.39	17.62	20.15	22.37	27.90					
14935	8.31	9.25	11.83	13.63	14.41	17.26	20.44	22.51	24.38	30.79	35.52	40.14	45.88	57.70	63.52				
	4.29	4.71	5.99	6.62	7.20	8.59	10.06	11.07	11.66	14.46	16.56	18.92	21.01	26.22	29.05				
15240	8.05	8.97	11.47	13.17	13.93	16.69	19.76	21.75	23.55	29.74	34.19	38.76	44.26	55.64	61.26				
	4.04	4.43	5.64	6.23	6.78	8.08	9.48	10.42	10.96	13.61	15.58	17.81	19.77	24.66	27.33				
15545	7.80	8.68	11.12	12.75	13.48	16.15	19.08	21.02	22.76	28.67	32.85	37.43	42.70	53.63	59.11				
	3.80	4.17	5.31	5.88	6.39	7.61	8.93	9.80	10.33	12.81	14.68	16.78	18.62	23.23	25.74				
15850	7.58	8.40	10.77	12.34	13.06	15.64	18.47	20.35	22.02	27.55	31.58	36.17	41.06	51.57	57.09	63.39			
	3.59	3.94	5.00	5.54	6.02	7.18	8.42	9.25	9.73	12.08	13.84	15.81	17.57	21.90	24.28	27.56			
16154	7.36	8.15	10.43	11.95	12.65	15.14	17.86	19.48	21.29	26.53	30.39	34.98	39.53	49.61	55.13	61.00			
	3.38	3.72	4.72	5.22	5.69	6.78	7.95	8.74	9.19	11.41	13.07	14.94	16.57	20.67	22.92	26.02			
16459	7.15	7.89	10.11	11.52	12.22	14.66	17.29	19.05	20.62	25.53	29.28	33.84	38.06	47.78	53.29	58.75	65.16		
	3.21	3.51	4.46	4.94	5.37	6.40	7.51	8.26	8.69	10.78	12.34	14.11	15.67	19.55	21.65	24.59	26.82		
16764	6.96	7.66	9.82	11.13	11.86	14.22	16.73	18.44	19.96	24.61	28.21	32.63	36.68	46.05	51.45	56.62	63.00		
	3.03	3.32	4.23	4.67	5.09	6.07	7.10	7.80	8.21	10.20	11.68	13.35	14.82	18.49	20.48	23.26	25.37		
17069	6.75	7.44	9.51	10.74	11.51	13.79	16.21	17.87	19.35	23.74	27.20	31.47	35.37	44.40	49.61	54.61	60.91	65.24	
	2.87	3.15	4.01	4.42	4.81	5.74	6.72	7.39	7.79	9.66	11.06	12.65	14.03	17.51	19.40	22.03	24.03	26.07	
17374	6.56	7.22	9.25	10.37	11.16	13.36	15.71	17.33	18.75	22.91	26.26	30.38	34.14	42.86	47.89	52.71	58.93	62.97	
	2.72	2.97	3.79	4.20	4.56	5.44	6.37	7.01	7.38	9.16	10.49	11.99	13.30	16.60	18.40	20.88	22.79	24.72	
17678	6.39	7.01	8.98	9.93	10.82	12.97	15.25	16.81	17.70	22.12	25.34	29.33	32.96	41.38	46.23	50.88	57.04	60.81	
	2.58	2.83	3.60	3.98	4.33	5.16	6.05	6.65	7.00	8.69	9.95	11.38	12.63	15.76	17.45	19.81	21.62	23.45	
17983	6.18	6.80	8.71	9.63	10.50	12.57	14.76	16.52	17.39	21.38	24.48	28.34	31.84	39.98	44.67	49.16	55.25	58.75	
	2.45	2.69	3.42	3.79	4.13	4.93	5.76	6.33	6.77	8.26	9.45	10.79	11.99	14.95	16.57	18.82	20.53	22.27	
18288	5.99	6.61	8.44	9.32	10.17	12.18	14.31	15.95	17.08	20.66	23.68	27.40	30.79	38.65	43.18	47.54	53.54	56.79	
	2.33	2.56	3.26	3.61	3.92	4.69	5.48	6.01	6.53	7.85	8.98	10.27	11.39	14.22	15.76	17.89	19.52	21.17	
18593	5.82	6.40	8.18	9.03	9.86	11.82	13.87	15.45	16.82	19.97	22.91	26.50	29.78	37.40	41.78	45.98	51.89	54.94	65.03
	2.23	2.45	3.12	3.44	3.75	4.48	5.23	5.72	6.33	7.47	8.55	9.77	10.84	13.52	14.98	17.01	18.57	20.13	23.46
18898	5.64	6.21	7.93	8.77	9.58	11.44	13.45	14.94	16.28	19.35	22.16	25.65	28.82	36.20	40.42	44.49	50.31	53.16	62.92
	2.13	2.33	2.97	3.28	3.59	4.26	4.99	5.44	6.02	7.10	8.14	9.31	10.33	12.88	14.27	16.21	17.68	19.17	22.34
19202	5.48	6.04	7.70	8.50	9.29	11.12	13.04	14.46	15.77	18.73	21.46	24.83	27.90	35.03	39.15	43.09	48.81	51.48	60.94
	2.04	2.23	2.84	3.13	3.41	4.07	4.77	5.19	5.74	6.77	7.74	8.85	9.83	12.27	13.60	15.44	16.85	18.27	21.27
19507	5.34	5.86	7.48	8.27	9.01	10.78	12.66	14.02	15.27	18.14	20.79	24.05	27.05	33.94	37.92	41.73	47.38	49.88	59.03
	1.95	2.13	2.71	3.00	3.26	3.89	4.55	4.94	5.47	6.46	7.39	8.44	9.38	11.70	12.97	14.72	16.06	17.42	20.30
19812	5.18	5.69	7.28	8.02	8.77	10.46	12.30	13.58	14.81	17.60	20.15	23.33	26.22	32.92	36.77	40.46	46.01	48.34	57.23
	1.86	2.04	2.61	2.87	3.12	3.72	4.34	4.71	5.22	6.15	7.06	8.07	8.96	11.17	12.37	14.05	15.33	16.62	19.36
20117	5.03	5.53	7.06	7.80	8.50	10.15	11.95	13.17	14.36	17.04	19.54	22.60	25.40	31.91	35.65	39.24	44.70	46.89	55.51
	1.78	1.95	2.49	2.74	2.99	3.54	4.15	4.50	4.99	5.88	6.74	7.70	8.55	10.66	11.82	13.42	14.63	15.87	18.50
20422	4.90	5.38	6.87	7.58	8.27	9.85	11.61	12.78	13.93	16.54	18.97	21.94	24.66	30.96	34.58	38.06	43.43	45.48	53.85
	1.70	1.86	2.37	2.62	2.86	3.38	3.98	4.30	4.77	5.61	6.43	7.35	8.17	10.20	11.29	12.82	13.99	15.17	17.67
20726	4.77	5.22	6.69	7.39	8.05	9.55	11.29	12.40	13.52	16.06	18.40	21.29	23.94	30.04	33.58	36.95	42.22	44.14	52.27
	1.63	1.79	2.29	2.52	2.74	3.23	3.82	4.13	4.55	5.38	6.15	7.03	7.82	9.74	10.79	12.27	13.38	14.50	16.89
21031	4.64	5.09	6.49	7.18	7.83	9.28	10.98	12.05	13.13	15.60	17.87	20.67	23.24	29.20	32.61	35.90	41.06	42.87	50.75
	1.56	1.72	2.18	2.40	2.62	3.10	3.66	3.94	4.36	5.15	5.89	6.74	7.48	9.32	10.33	11.73	12.79	13.89	16.18
21336	4.52	4.96	6.31	7.00	7.61	9.01	10.68	11.70	12.75	15.16	17.38	20.09	22.59	28.37	31.66	34.86	39.94	41.65	49.31
	1.50	1.64	2.10	2.32	2.52	2.97	3.50	3.77	4.17	4.93	5.64	6.45	7.16	8.93	9.89	11.23	12.25	13.29	15.48
21641	4.39	4.83	6.17	6.80	7.41	8.75	10.39	11.38	12.40	14.72	16.87	19.52	21.94	27.55	30.77	33.88	38.87	40.49	47.91
	1.44	1.59	2.01	2.21	2.42	2.84	3.37	3.60	3.99	4.71	5.39	6.17	6.85	8.56	9.48	10.77	11.74	12.74	14.84
21946	4.29	4.69	6.01	6.62	7.22	8.50	10.12	11.04	12.05	14.31	16.41	19.00	21.33	26.79	29.91	32.93	37.84	39.37	46.59
	1.38	1.51	1.94	2.13	2.32	2.72	3.23	3.45	3.83	4.52	5.18	5.92	6.58	8.20	9.09	10.31	11.26	12.21	14.22

LRFD

METRIC LOAD TABLE/OPEN WEB STEEL JOISTS, LH-SERIES
Based on a 345 MPa Maximum Yield Strength - Loads Shown In Kilonewtons Per Meter (kN/m)

Joist Designation	40LH08	40LH09	40LH10	40LH11	40LH12	40LH13	40LH14	40LH15	40LH16	40LH17	40LH18	40LH19	40LH20	40LH21	40LH22	40LH23	40LH24	40LH25
Depth (mm)	1016	1016	1016	1016	1016	1016	1016	1016	1016	1016	1016	1016	1016	1016	1016	1016	1016	1016
Approx. Wt. (kN/m)	0.23	0.31	0.31	0.32	0.36	0.44	0.51	0.53	0.61	0.74	0.82	0.93	1.18	1.36	1.46	1.77	1.85	2.16
Span (mm) ↓																		
12192	11.35	15.42	18.35	19.23	23.37	28.38	32.39	36.22	42.96	52.02	58.76							
	7.57	10.28	12.24	12.82	15.58	18.92	21.59	24.15	28.64	34.68	39.18							
12497	11.03	14.92	17.73	18.60	22.59	27.37	31.23	34.95	41.38	50.13	56.60							
	7.35	9.95	11.82	12.40	15.06	18.25	20.82	23.30	27.59	33.42	37.73							
12802	10.72	14.44	17.13	17.96	21.81	26.41	30.13	33.71	39.88	48.29	54.55	63.74						
	7.15	9.63	11.42	11.98	14.55	17.61	20.09	22.47	26.59	32.19	36.36	41.94						
13106	10.39	14.01	16.56	17.38	21.10	25.49	29.08	32.54	38.44	46.55	52.59	61.33						
	6.93	9.34	11.04	11.58	14.06	17.00	19.39	21.70	25.62	30.73	35.06	39.06						
13411	10.11	13.57	16.02	16.78	20.40	24.61	28.10	31.43	37.08	44.92	50.74	59.06						
	6.74	9.04	10.68	11.19	13.60	16.41	18.73	20.95	24.72	28.67	32.77	36.44						
13716	9.80	13.14	15.49	16.24	19.74	23.78	27.14	30.35	35.78	43.34	48.94	56.88						
	6.53	8.77	10.01	10.82	13.16	15.48	17.76	19.80	21.74	26.79	30.63	34.04						
14021	9.51	12.74	14.98	15.71	19.10	22.98	26.22	29.33	34.54	41.82	47.25	54.82						
	6.34	8.49	9.36	10.15	12.36	14.49	16.62	18.53	20.34	25.07	28.66	31.85						
14326	9.25	12.34	14.50	15.20	18.49	22.21	25.36	28.37	33.36	40.41	45.66	52.88						
	6.10	7.96	8.78	9.51	11.58	13.58	15.57	17.36	19.07	23.49	26.85	29.85						
14630	8.98	11.96	14.05	14.72	17.90	21.49	24.53	27.45	32.23	39.05	44.10	51.02	64.19					
	5.72	7.47	8.24	8.93	10.87	12.74	14.60	16.28	17.89	22.03	25.20	28.02	34.99					
14935	8.75	11.61	13.61	14.27	17.33	20.79	23.72	26.54	31.17	37.73	42.64	49.26	61.99					
	5.37	7.03	7.74	8.39	10.21	11.98	13.73	15.30	16.81	20.70	23.68	26.32	32.88					
15240	8.50	11.26	13.19	13.83	16.81	20.13	22.98	25.69	30.13	36.51	41.24	47.59	59.86					
	5.06	6.61	7.28	7.89	9.61	11.26	12.91	14.40	15.81	19.48	22.28	24.76	30.93					
15545	8.27	10.94	12.78	13.41	16.28	19.49	22.24	24.88	29.15	35.33	39.89	45.98	57.85	63.70				
	4.77	6.23	6.85	7.42	9.04	10.60	12.17	13.57	14.90	18.35	20.98	23.32	29.14	32.29				
15850	8.05	10.63	12.39	13.00	15.80	18.88	21.55	24.09	28.23	34.19	38.63	44.45	55.95	61.60				
	4.49	5.86	6.46	7.00	8.53	10.01	11.47	12.79	14.05	17.30	19.78	21.99	27.48	30.45				
16154	7.83	10.33	12.01	12.60	15.32	18.30	20.88	23.35	27.33	33.11	37.40	43.00	54.11	59.58				
	4.24	5.54	6.11	6.62	8.05	9.44	10.82	12.08	13.26	16.34	18.68	20.76	25.94	28.74				
16459	7.61	10.02	11.66	12.22	14.85	17.74	20.24	22.64	26.48	32.06	36.25	41.60	52.36	57.66				
	4.01	5.23	5.77	6.26	7.61	8.93	10.24	11.41	12.53	15.44	17.65	19.62	24.51	27.17				
16764	7.41	9.76	11.33	11.87	14.41	17.20	19.62	21.97	25.65	31.08	35.12	40.29	50.69	55.82	63.49			
	3.79	4.96	5.45	5.92	7.20	8.44	9.69	10.79	11.86	14.60	16.71	18.56	23.20	25.71	29.20			
17069	7.22	9.47	11.00	11.52	14.01	16.69	19.04	21.32	24.88	30.13	34.06	39.02	49.09	54.07	61.22			
	3.59	4.69	5.18	5.60	6.82	7.99	9.17	10.23	11.23	13.83	15.81	17.58	21.96	24.34	27.65			
17374	7.04	9.20	10.68	11.20	13.61	16.19	18.49	20.67	24.13	29.24	33.02	37.82	47.59	52.40	59.10	64.35		
	3.40	4.45	4.90	5.31	6.47	7.58	8.69	9.69	10.65	13.11	15.00	16.66	20.82	23.08	26.22	28.63		
17678	6.84	8.97	10.37	10.87	13.22	15.73	17.95	20.09	23.42	28.37	32.06	36.65	46.11	50.80	57.06	62.35		
	3.22	4.21	4.65	5.04	6.14	7.19	8.26	9.20	10.11	12.44	14.22	15.81	19.76	21.90	24.88	27.17		
17983	6.66	8.72	10.08	10.56	12.84	15.27	17.43	19.49	22.72	27.40	31.12	35.55	44.74	49.26	55.13	60.43		
	3.06	4.01	4.42	4.78	5.83	6.82	7.83	8.74	9.60	11.82	13.51	15.01	18.76	20.79	23.62	25.80		
18288	6.49	8.49	9.77	10.28	12.49	14.84	16.94	18.95	22.06	26.50	30.22	34.47	43.34	47.80	53.29	58.59	63.78	
	2.91	3.80	4.20	4.55	5.54	6.49	7.45	8.30	9.12	11.23	12.84	14.28	17.83	19.77	22.46	24.53	26.63	
18593	6.34	8.27	9.47	9.99	12.14	14.41	16.46	18.43	21.45	25.62	29.34	33.36	41.91	46.37	51.54	56.84	61.70	
	2.77	3.63	3.99	4.33	5.26	6.18	7.09	7.90	8.68	10.68	12.21	13.58	16.97	18.81	21.36	23.33	25.33	
18898	6.18	8.05	9.16	9.73	11.82	14.02	15.99	17.90	20.84	24.79	28.51	32.28	40.55	45.05	49.88	55.17	59.71	
	2.64	3.45	3.80	4.13	5.02	5.88	6.74	7.53	8.26	10.17	11.63	12.93	16.15	17.90	20.34	22.22	24.12	
19202	6.04	7.83	8.88	9.47	11.51	13.63	15.55	17.42	20.24	24.00	27.72	31.26	39.28	43.75	48.30	53.55	57.83	
	2.52	3.29	3.63	3.92	4.78	5.60	6.43	7.16	7.88	9.69	11.09	12.33	15.39	17.06	19.38	21.17	22.98	
19507	5.88	7.63	8.62	9.20	11.20	13.26	15.14	16.94	19.70	23.26	26.92	30.29	38.06	42.52	46.80	52.02	56.04	
	2.40	3.13	3.45	3.75	4.56	5.34	6.12	6.84	7.51	9.25	10.56	11.74	14.68	16.27	18.49	20.18	21.92	
19812	5.73	7.44	8.36	8.97	10.90	12.91	14.72	16.47	19.14	22.56	26.09	29.34	36.87	41.21	45.37	50.53	54.30	64.28
	2.29	2.99	3.29	3.57	4.34	5.10	5.85	6.52	7.16	8.82	10.08	11.22	14.01	15.52	17.64	19.26	20.92	24.38
20117	5.56	7.26	8.02	8.72	10.63	12.53	14.36	16.06	17.68	21.86	25.30	28.47	35.76	39.97	44.00	49.13	52.66	62.35
	2.18	2.86	3.15	3.41	4.15	4.87	5.58	6.23	6.84	8.42	9.63	10.71	13.38	14.82	16.84	18.40	19.97	23.29
20422	5.39	7.06	7.80	8.49	10.33	12.18	13.96	15.58	17.42	21.23	24.56	27.62	34.71	38.79	42.68	47.78	51.09	60.50
	2.10	2.74	3.02	3.26	3.98	4.67	5.35	5.95	6.64	8.05	9.20	10.23	12.78	14.17	16.09	17.58	19.08	22.25
20726	5.26	6.88	7.58	8.27	10.04	11.86	13.57	15.11	17.16	20.59	23.83	26.80	33.68	37.65	41.43	46.46	49.60	58.72
	2.01	2.62	2.88	3.13	3.80	4.48	5.12	5.69	6.43	7.70	8.80	9.79	12.22	13.55	15.39	16.81	18.25	21.27
21031	5.12	6.69	7.39	8.05	9.77	11.55	13.19	14.68	16.89	20.00	23.13	26.02	32.71	36.55	40.23	45.22	48.15	57.01
	1.92	2.52	2.77	3.02	3.66	4.30	4.90	5.44	6.24	7.36	8.42	9.36	11.70	12.97	14.73	16.09	17.46	20.37
21336	4.99	6.52	7.19	7.83	9.51	11.25	12.84	14.27	16.65	19.43	22.47	25.27	31.78	35.50	39.09	44.01	46.80	55.39
	1.85	2.42	2.67	2.88	3.51	4.13	4.71	5.21	6.07	7.04	8.07	8.97	11.20	12.41	14.11	15.41	16.72	19.49
21641	4.85	6.36	7.01	7.63	9.28	10.94	12.49	13.84	16.43	18.88	21.84	24.57	30.88	34.51	38.00	42.86	45.48	53.85
	1.78	2.33	2.56	2.77	3.37	3.95	4.50	4.99	5.89	6.75	7.73	8.59	10.74	11.89	13.51	14.76	16.02	18.68
21946	4.74	6.18	6.84	7.44	9.03	10.65	12.17	13.48	15.98	18.35	21.24	23.90	30.03	33.55	36.95	41.73	44.21	52.33
	1.70	2.23	2.46	2.67	3.23	3.79	4.33	4.78	5.64	6.47	7.41	8.23	10.28	11.41	12.95	14.15	15.36	17.90
22250	4.61	6.04	6.66	7.26	8.80	10.39	11.86	13.10	15.54	17.86	20.66	23.24	29.21	32.63	35.91	40.67	43.00	50.91
	1.63	2.14	2.36	2.56	3.10	3.64	4.15	4.59	5.41	6.21	7.10	7.89	9.88	10.94	12.43	13.57	14.73	17.17
22555	4.50	5.88	6.49	7.06	8.58	10.12	11.55	12.75	15.11	17.38	20.11	22.60	28.42	31.75	34.95	39.63	41.85	49.53
	1.57	2.05	2.27	2.46	2.99	3.51	3.98	4.40	5.19	5.96	6.82	7.58	9.47	10.50	11.93	13.03	14.15	16.49
22860	4.39	5.74	6.34	6.88	8.36	9.86	11.26	12.40	14.72	16.91	19.57	22.02	27.67	30.90	34.03	38.63	40.73	48.21
	1.51	1.98	2.18	2.37	2.87	3.37	3.83	4.23	4.99	5.73	6.55	7.28	9.10	10.08	11.45	12.52	13.58	15.83
23165	4.29	5.60	6.18	6.74	8.15	9.63	10.98	12.08	14.33	16.47	19.05	21.42	26.94	30.09	33.14	37.69	39.66	46.94
	1.45	1.91	2.10	2.29	2.75	3.25	3.67	4.07	4.80	5.50	6.28	7.00	8.74	9.69	11.00	12.02	13.06	15.22
23470	4.20	5.47	6.04	6.56	7.96	9.38	10.72	11.77	13.96	16.03	18.56	20.88	26.23	29.30	32.28	36.77	38.63	45.75
	1.41	1.83	2.02	2.20	2.65	3.12	3.54	3.91	4.61	5.29	6.05	6.72	8.40	9.31	10.58	11.55	12.55	14.63
23774	4.08	5.34	5.88	6.40	7.76	9.16	10.46	11.47	13.61	15.63	18.08	20.35	25.56	28.56	31.44	35.87	37.65	44.56
	1.35	1.78	1.95	2.11	2.56	3.02	3.40	3.76	4.43	5.09	5.82	6.46	8.08	8.96	10.18	11.12	12.06	14.06
24079	3.99	5.22	5.73	6.26	7.57	8.94	10.20	11.17	13.26	15.23	17.64	19.83	24.92	27.84	30.66	35.02	36.68	43.44
	1.31	1.72	1.88	2.04	2.46	2.90	3.28	3.61	4.26	4.90	5.60	6.23	7.77	8.62	9.79	10.69	11.61	13.54
24384	3.89	5.09	5.57	6.10	7.39	8.72	9.95	10.90	12.93	14.85	17.17	19.32	24.29	27.14	29.90	34.19	35.78	42.35
	1.25	1.64	1.80	1.97	2.37	2.80	3.15	3.48	4.11	4.71	5.39	5.99	7.48	8.30	9.42	10.30	11.19	13.03

LRFD

METRIC LOAD TABLE/OPEN WEB STEEL JOISTS, LH-SERIES
Based on a 345 MPa Maximum Yield Strength - Loads Shown In Kilonewtons Per Meter (kN/m)

Joist Designation	44LH09	44LH10	44LH11	44LH12	44LH13	44LH14	44LH15	44LH16	44LH17	44LH18	44LH19	44LH20	44LH21	44LH22	44LH23	44LH24	44LH25
Depth (mm)	1118	1118	1118	1118	1118	1118	1118	1118	1118	1118	1118	1118	1118	1118	1118	1118	1118
Approx. Wt. (kN/m)	0.28	0.31	0.32	0.36	0.44	0.45	0.53	0.61	0.69	0.83	0.93	1.20	1.36	1.47	1.72	1.85	2.15
Span (mm) ↓																	
13411	12.79	14.11	16.63	19.62	23.16	27.58	32.09	37.87	42.22	52.27	61.64						
	8.53	9.41	11.09	13.09	15.44	18.38	21.39	25.24	28.15	34.85	41.09						
13716	12.43	13.71	16.15	19.04	22.46	26.70	31.08	36.61	40.84	50.56	59.49						
	8.28	9.15	10.77	12.69	14.97	17.80	20.72	24.41	27.23	33.71	39.66						
14021	12.08	13.32	15.67	18.47	21.77	25.87	30.09	35.43	39.53	48.91	57.45						
	8.05	8.88	10.44	12.31	14.52	17.24	20.06	23.62	26.35	32.61	38.30						
14326	11.74	12.95	15.20	17.92	21.14	25.08	29.17	34.29	38.26	47.37	55.52						
	7.83	8.63	10.14	11.95	14.09	16.72	19.45	22.86	25.51	31.58	36.54						
14630	11.42	12.60	14.75	17.39	20.53	24.31	28.28	33.23	37.05	45.85	53.67						
	7.61	8.40	9.83	11.60	13.68	16.21	18.85	22.15	24.24	30.57	34.29						
14935	11.12	12.25	14.33	16.89	19.92	23.56	27.42	32.17	35.90	44.43	51.89	65.33					
	7.41	8.17	9.51	11.26	13.28	15.71	18.28	21.30	22.78	28.95	32.22	40.30					
15240	10.81	11.92	13.92	16.41	19.35	22.86	26.59	31.17	34.77	43.05	50.21	63.22					
	7.20	7.95	8.94	10.94	12.90	15.00	17.42	20.05	21.42	27.24	30.31	37.91					
15545	10.52	11.60	13.52	15.93	18.79	22.16	25.80	30.22	33.71	41.73	48.59	61.20					
	7.01	7.73	8.43	10.40	12.33	14.12	16.41	18.88	20.18	25.65	28.56	35.71					
15850	10.24	11.29	13.13	15.49	18.27	21.54	25.05	29.30	32.67	40.46	47.06	59.25	65.23				
	6.68	7.35	7.95	9.80	11.63	13.32	15.48	17.80	19.03	24.19	26.92	33.68	37.34				
16154	9.95	10.98	12.75	15.06	17.74	20.89	24.31	28.42	31.69	39.24	45.59	57.39	63.19				
	6.30	6.94	7.50	9.26	10.98	12.57	14.62	16.81	17.96	22.85	25.42	31.80	35.25				
16459	9.69	10.69	12.40	14.63	17.26	20.28	23.61	27.58	30.77	38.09	44.17	55.61	61.25				
	5.96	6.56	7.09	8.75	10.37	11.89	13.82	15.89	16.98	21.59	24.02	30.04	33.31				
16764	9.45	10.42	12.05	14.22	16.78	19.71	22.94	26.76	29.85	36.96	42.81	53.90	59.36				
	5.64	6.21	6.71	8.28	9.82	11.25	13.07	15.03	16.06	20.43	22.73	28.42	31.52				
17069	9.20	10.15	11.73	13.84	16.33	19.17	22.29	26.00	28.99	35.90	41.51	52.28	57.57				
	5.34	5.88	6.36	7.85	9.29	10.65	12.37	14.24	15.22	19.35	21.52	26.92	29.85				
17374	8.97	9.89	11.42	13.48	15.89	18.62	21.67	25.26	28.16	34.86	40.29	50.74	55.86	65.46			
	5.06	5.57	6.02	7.44	8.81	10.09	11.73	13.49	14.43	18.34	20.40	25.52	28.29	32.15			
17678	8.72	9.63	11.12	13.10	15.49	18.12	21.07	24.53	27.36	33.88	39.11	49.22	54.21	63.23			
	4.80	5.29	5.72	7.06	8.36	9.58	11.13	12.81	13.68	17.39	19.36	24.22	26.85	30.51			
17983	8.50	9.38	10.81	12.75	15.06	17.61	20.50	23.83	26.59	32.93	37.97	47.80	52.64	61.09	65.01		
	4.56	5.02	5.42	6.69	7.93	9.10	10.58	12.17	13.00	16.53	18.38	22.99	25.51	28.98	31.68		
18288	8.28	9.15	10.52	12.43	14.66	17.13	19.93	23.17	25.84	32.01	36.87	46.42	51.13	59.06	63.10		
	4.33	4.77	5.16	6.37	7.55	8.65	10.05	11.55	12.36	15.71	17.48	21.86	24.24	27.53	30.12		
18593	8.09	8.93	10.25	12.09	14.27	16.68	19.40	22.54	25.14	31.14	35.82	45.10	49.69	57.13	61.26		
	4.13	4.55	4.91	6.05	7.18	8.23	9.55	11.00	11.76	14.94	16.63	20.79	23.05	26.21	28.64		
18898	7.89	8.71	9.99	11.79	13.92	16.24	18.88	21.93	24.47	30.29	34.82	43.84	48.29	55.29	59.49		
	3.92	4.33	4.67	5.77	6.84	7.83	9.10	10.47	11.19	14.22	15.83	19.80	21.96	24.95	27.27		
19202	7.70	8.49	9.73	11.48	13.54	15.80	18.40	21.33	23.81	29.47	33.85	42.64	46.94	53.54	57.80	64.18	
	3.75	4.13	4.45	5.50	6.52	7.47	8.68	9.98	10.66	13.55	15.09	18.86	20.92	23.77	25.99	28.25	
19507	7.50	8.28	9.50	11.20	13.22	15.41	17.92	20.76	23.17	28.69	32.92	41.46	45.66	51.88	56.18	62.17	
	3.57	3.94	4.24	5.23	6.21	7.12	8.27	9.51	10.17	12.93	14.38	17.99	19.94	22.67	24.79	26.94	
19812	7.32	8.09	9.25	10.91	12.88	14.98	17.46	20.22	22.56	27.94	32.04	40.33	44.40	50.27	54.63	60.25	
	3.41	3.75	4.05	5.00	5.93	6.80	7.89	9.07	9.70	12.34	13.73	17.17	19.04	21.64	23.65	25.71	
20117	7.15	7.89	8.98	10.65	12.56	14.62	17.00	19.70	21.97	27.23	31.17	39.27	43.22	48.77	53.15	58.44	
	3.25	3.59	3.86	4.78	5.66	6.49	7.54	8.66	9.26	11.77	13.10	16.40	18.18	20.66	22.59	24.56	
20422	6.97	7.70	8.72	10.39	12.25	14.24	16.59	19.19	21.40	26.53	30.35	38.22	42.08	47.29	51.72	56.69	
	3.10	3.42	3.70	4.56	5.41	6.20	7.20	8.28	8.85	11.26	12.53	15.67	17.38	19.74	21.58	23.46	
20726	6.82	7.53	8.49	10.12	11.95	13.89	16.17	18.70	20.88	25.84	29.55	37.21	40.99	45.92	50.34	55.03	65.16
	2.97	3.28	3.54	4.36	5.18	5.92	6.88	7.92	8.47	10.77	11.98	14.98	16.62	18.88	20.65	22.44	26.16
21031	6.65	7.35	8.24	9.89	11.66	13.54	15.77	18.22	20.35	25.18	28.77	36.25	39.92	44.58	49.00	53.45	63.27
	2.84	3.13	3.38	4.17	4.96	5.67	6.59	7.58	8.11	10.30	11.47	14.34	15.90	18.06	19.76	21.46	25.04
21336	6.49	7.18	8.01	9.64	11.39	13.22	15.38	17.78	19.83	24.57	27.99	35.21	38.92	43.31	47.73	51.92	61.48
	2.72	3.00	3.23	3.99	4.74	5.42	6.31	7.26	7.76	9.86	10.97	13.73	15.22	17.30	18.91	20.56	23.97
21641	6.36	7.01	7.79	9.42	11.12	12.88	15.01	17.33	19.35	23.96	27.20	34.20	37.92	42.08	46.51	50.45	59.76
	2.61	2.87	3.10	3.83	4.55	5.21	6.05	6.96	7.44	9.45	10.52	13.16	14.59	16.57	18.12	19.70	22.97
21946	6.21	6.84	7.58	9.20	10.85	12.57	14.66	16.91	18.88	23.37	26.45	33.27	36.96	40.93	45.31	49.05	58.09
	2.51	2.75	2.97	3.67	4.36	4.99	5.80	6.66	7.13	9.06	10.08	12.60	13.98	15.89	17.38	18.88	22.02
22250	6.08	6.69	7.39	8.98	10.60	12.30	14.31	16.50	18.43	22.82	25.74	32.36	36.07	39.81	44.17	47.72	56.52
	2.40	2.64	2.86	3.53	4.18	4.78	5.56	6.40	6.84	8.69	9.67	12.09	13.41	15.25	16.66	18.12	21.13
22555	5.95	6.56	7.10	8.80	10.43	12.01	13.98	16.12	17.29	22.24	25.04	31.49	35.17	38.74	43.08	46.42	54.98
	2.30	2.53	2.74	3.38	4.01	4.59	5.34	6.14	6.56	8.34	9.28	11.61	12.87	14.63	15.99	17.39	20.28
22860	5.79	6.40	6.93	8.59	10.20	11.68	13.63	15.73	17.07	21.64	24.35	30.64	34.25	37.71	42.03	45.19	53.51
	2.21	2.45	2.64	3.26	3.86	4.40	5.13	5.91	6.39	8.01	8.91	11.14	12.36	14.05	15.36	16.69	19.48
23165	5.66	6.26	6.78	8.37	9.93	11.38	13.30	15.33	16.82	21.07	23.72	29.85	33.36	36.73	40.99	44.01	52.11
	2.13	2.36	2.55	3.13	3.70	4.24	4.94	5.69	6.21	7.70	8.56	10.71	11.87	13.49	14.76	16.05	18.70
23470	5.53	6.10	6.61	8.18	9.71	11.07	12.97	14.97	16.60	20.53	23.11	29.07	32.48	35.76	40.01	42.87	50.75
	2.05	2.26	2.45	3.02	3.59	4.07	4.75	5.47	6.05	7.39	8.23	10.30	11.42	12.97	14.19	15.42	17.99
23774	5.39	5.95	6.45	7.98	9.47	10.78	12.66	14.62	16.41	20.00	22.51	28.32	31.65	34.85	39.06	41.76	49.47
	1.98	2.18	2.36	2.91	3.44	3.91	4.58	5.28	5.91	7.12	7.92	9.90	10.98	12.49	13.64	14.84	17.30
24079	5.29	5.82	6.31	7.79	9.25	10.52	12.36	14.27	16.02	19.49	21.94	27.62	30.86	33.97	38.14	40.71	48.21
	1.91	2.10	2.29	2.80	3.32	3.77	4.42	5.07	5.69	6.84	7.61	9.54	10.58	12.01	13.13	14.27	16.65
24384	5.16	5.69	6.17	7.58	9.03	10.25	12.05	13.93	15.64	19.01	21.40	26.92	30.07	33.11	37.25	39.71	47.02
	1.85	2.02	2.20	2.69	3.21	3.63	4.26	4.90	5.48	6.59	7.34	9.17	10.18	11.57	12.65	13.74	16.03
24689	5.04	5.56	6.04	7.41	8.84	9.99	11.74	13.61	15.29	18.56	20.88	26.26	29.34	32.31	36.39	38.71	45.85
	1.78	1.95	2.13	2.61	3.09	3.50	4.10	4.72	5.29	6.34	7.06	8.84	9.80	11.14	12.18	13.23	15.44
24994	4.94	5.44	5.88	7.23	8.63	9.76	11.47	13.30	14.94	18.09	20.37	25.62	28.63	31.52	35.56	37.78	44.74
	1.72	1.89	2.04	2.51	2.99	3.37	3.95	4.56	5.12	6.12	6.81	8.52	9.45	10.74	11.74	12.76	14.88
25298	4.83	5.31	5.77	7.06	8.44	9.54	11.20	13.00	14.59	17.65	19.87	24.99	27.93	30.74	34.76	36.86	43.66
	1.66	1.82	1.98	2.42	2.88	3.25	3.80	4.40	4.93	5.89	6.56	8.21	9.10	10.34	11.32	12.30	14.34
25603	4.72	5.21	5.64	6.88	8.24	9.29	10.94	12.69	14.27	17.24	19.40	24.40	27.27	30.03	33.98	35.98	42.61
	1.60	1.76	1.91	2.33	2.78	3.13	3.67	4.24	4.77	5.69	6.33	7.92	8.78	9.98	10.91	11.86	13.83
25908	4.61	5.09	5.51	6.74	8.07	9.07	10.68	12.43	13.96	16.82	18.95	23.83	26.63	29.33	33.24	35.15	41.63
	1.54	1.70	1.85	2.26	2.69	3.02	3.54	4.11	4.61	5.48	6.11	7.64	8.47	9.63	10.53	11.45	13.35
26213	4.52	4.99	5.39	6.56	7.89	8.88	10.42	12.14	13.65	16.43	18.51	23.29	26.02	28.64	32.50	34.33	40.67
	1.50	1.64	1.79	2.17	2.61	2.91	3.41	3.96	4.45	5.29	5.89	7.38	8.18	9.29	10.17	11.06	12.90
26518	4.42	4.87	5.29	6.40	7.72	8.66	10.20	11.87	13.35	16.06	18.08	22.73	25.40	27.99	31.80	33.55	39.72
	1.44	1.60	1.73	2.10	2.52	2.81	3.31	3.83	4.30	5.12	5.70	7.13	7.90	8.98	9.82	10.68	12.44
26822	4.33	4.77	5.16	6.27	7.57	8.46	9.95	11.61	13.06	15.71	17.68	22.24	24.83	27.36	31.12	32.79	38.83
	1.40	1.54	1.67	2.02	2.43	2.72	3.19	3.72	4.15	4.94	5.50	6.88	7.63	8.68	9.48	10.31	12.02

LRFD

METRIC LOAD TABLE/OPEN WEB STEEL JOISTS, LH-SERIES
Based on a 345 MPa Maximum Yield Strength - Loads Shown In Kilonewtons Per Meter (kN/m)

Joist Designation	48LH10	48LH11	48LH12	48LH13	48LH14	48LH15	48LH16	48LH17	48LH18	48LH19	48LH20	48LH21	48LH22	48LH23	48LH24	48LH25
Depth (mm)	1219	1219	1219	1219	1219	1219	1219	1219	1219	1219	1219	1219	1219	1219	1219	1219
Approx. Wt. (kN/m)	0.31	0.32	0.36	0.42	0.47	0.53	0.61	0.69	0.83	0.90	1.15	1.27	1.47	1.59	1.81	2.10
Span (mm) ↓																
14630	11.77	12.71	16.54	19.80	24.12	27.67	32.71	36.73	46.86	55.52						
	7.85	8.47	11.03	13.20	16.08	18.44	21.81	24.48	31.24	37.02						
14935	11.48	12.39	16.11	19.26	23.43	26.89	31.78	35.65	45.50	53.80						
	7.66	8.26	10.74	12.84	15.63	17.93	21.19	23.77	30.34	35.87						
15240	11.20	12.08	15.68	18.75	22.78	26.13	30.83	34.60	44.19	52.14						
	7.47	8.05	10.46	12.50	15.19	17.42	20.56	23.07	29.46	34.76						
15545	10.91	11.77	15.27	18.27	22.16	25.40	29.96	33.62	42.92	50.56	63.67					
	7.28	7.85	10.18	12.18	14.78	16.94	19.97	22.41	28.61	33.71	42.45					
15850	10.65	11.48	14.88	17.78	21.55	24.70	29.11	32.66	41.69	49.03	61.74					
	7.10	7.66	9.92	11.86	14.37	16.47	19.40	21.77	27.80	32.35	40.51					
16154	10.39	11.20	14.49	17.33	20.97	24.05	28.28	31.74	40.51	47.56	59.90					
	6.93	7.47	9.66	11.55	13.98	16.03	18.85	21.16	27.01	30.54	38.25					
16459	10.12	10.94	14.11	16.87	20.40	23.39	27.49	30.83	39.37	46.16	58.14	64.02				
	6.75	7.29	9.41	11.25	13.60	15.60	18.25	20.41	25.91	28.86	36.14	40.08				
16764	9.89	10.68	13.74	16.43	19.84	22.76	26.72	29.99	38.27	44.80	56.44	62.17				
	6.59	7.12	9.16	10.96	13.09	14.98	17.27	19.32	24.53	27.31	34.20	37.92				
17069	9.64	10.42	13.39	16.02	19.32	22.16	26.00	29.17	37.22	43.51	54.82	60.37				
	6.43	6.94	8.80	10.50	12.39	14.19	16.35	18.30	23.23	25.87	32.39	35.91				
17374	9.42	10.17	13.06	15.63	18.82	21.58	25.27	28.37	36.22	42.29	53.25	58.63				
	6.15	6.64	8.34	9.95	11.74	13.45	15.51	17.33	22.02	24.51	30.70	34.04				
17678	9.19	9.93	12.74	15.23	18.31	21.01	24.60	27.59	35.25	41.08	51.76	57.00				
	5.83	6.30	7.90	9.45	11.14	12.76	14.71	16.46	20.89	23.27	29.14	32.31				
17983	8.97	9.69	12.40	14.85	17.83	20.46	23.94	26.88	34.32	39.94	50.31	55.39	65.42			
	5.54	5.98	7.51	8.97	10.59	12.12	13.98	15.63	19.84	22.09	27.67	30.69	34.87			
18288	8.77	9.47	12.09	14.49	17.39	19.93	23.30	26.15	33.40	38.83	48.91	53.86	63.61			
	5.28	5.69	7.15	8.53	10.06	11.52	13.28	14.85	18.86	21.00	26.31	29.17	33.15			
18593	8.58	9.25	11.82	14.14	16.94	19.43	22.69	25.48	32.52	37.78	47.59	52.40	61.87	65.05		
	5.02	5.41	6.80	8.11	9.57	10.96	12.63	14.12	17.95	19.97	25.02	27.74	31.53	34.51		
18898	8.36	9.03	11.52	13.79	16.52	18.95	22.10	24.82	31.69	36.74	46.29	50.97	60.21	63.26		
	4.77	5.15	6.47	7.73	9.12	10.43	12.03	13.45	17.08	19.03	23.83	26.41	30.03	32.86		
19202	8.18	8.81	11.25	13.45	16.11	18.47	21.54	24.18	30.88	35.76	45.06	49.61	58.62	61.51		
	4.55	4.90	6.17	7.36	8.68	9.95	11.47	12.82	16.28	18.12	22.70	25.17	28.61	31.31		
19507	7.98	8.62	10.98	13.13	15.71	18.00	20.98	23.56	30.09	34.82	43.86	48.30	56.93	59.84		
	4.34	4.68	5.88	7.01	8.28	9.48	10.93	12.22	15.52	17.29	21.65	24.00	27.29	29.85		
19812	7.80	8.42	10.72	12.82	15.32	17.57	20.46	22.98	29.33	33.90	42.73	47.06	55.17	58.24		
	4.14	4.46	5.61	6.69	7.90	9.04	10.43	11.67	14.81	16.50	20.66	22.91	26.03	28.50		
20117	7.63	8.24	10.46	12.52	14.94	17.16	19.96	22.41	28.60	33.02	41.63	45.83	53.51	56.69	64.22	
	3.95	4.26	5.35	6.40	7.54	8.63	9.96	11.14	14.15	15.76	19.73	21.87	24.86	27.21	29.61	
20422	7.45	8.05	10.21	12.22	14.59	16.73	19.45	21.84	27.90	32.19	40.55	44.65	51.92	55.20	62.30	
	3.77	4.07	5.12	6.11	7.20	8.26	9.52	10.65	13.52	15.06	18.85	20.91	23.77	26.00	28.29	
20726	7.31	7.88	9.98	11.95	14.24	16.34	19.00	21.32	27.23	31.36	39.53	43.53	50.40	53.77	60.47	
	3.61	3.89	4.90	5.85	6.90	7.89	9.10	10.18	12.93	14.40	18.03	19.99	22.72	24.86	27.05	
21031	7.13	7.70	9.76	11.66	13.89	15.95	18.53	20.79	26.57	30.60	38.54	42.43	48.94	52.40	58.72	
	3.45	3.73	4.68	5.60	6.61	7.55	8.71	9.74	12.37	13.77	17.24	19.13	21.74	23.80	25.88	
21336	6.97	7.53	9.54	11.39	13.58	15.58	18.08	20.31	25.93	29.82	37.57	41.38	47.54	51.06	57.04	
	3.31	3.57	4.49	5.35	6.31	7.23	8.34	9.34	11.85	13.19	16.52	18.31	20.82	22.79	24.79	
21641	6.82	7.36	9.32	11.16	13.26	15.20	17.65	19.83	25.32	29.08	36.65	40.38	46.20	49.77	55.44	65.67
	3.18	3.42	4.30	5.13	6.05	6.93	7.99	8.94	11.35	12.63	15.83	17.55	19.94	21.83	23.75	27.71
21946	6.66	7.22	9.10	10.90	12.95	14.85	17.24	19.35	24.70	28.38	35.76	39.40	44.93	48.55	53.90	63.84
	3.05	3.28	4.13	4.91	5.80	6.65	7.66	8.56	10.88	12.12	15.17	16.82	19.13	20.92	22.76	26.57

LRFD

METRIC LOAD TABLE/OPEN WEB STEEL JOISTS, LH-SERIES
Based on a 345 MPa Maximum Yield Strength - Loads Shown In Kilonewtons Per Meter (kN/m)

Joist Designation	48LH10	48LH11	48LH12	48LH13	48LH14	48LH15	48LH16	48LH17	48LH18	48LH19	48LH20	48LH21	48LH22	48LH23	48LH24	48LH25
Depth (mm)	1219	1219	1219	1219	1219	1219	1219	1219	1219	1219	1219	1219	1219	1219	1219	1219
Approx. Wt. (kN/m)	0.31	0.32	0.36	0.42	0.47	0.53	0.61	0.69	0.83	0.90	1.15	1.27	1.47	1.59	1.81	2.10
Span (mm) ↓																
22250	6.53	7.06	8.90	10.65	12.66	14.53	16.82	18.91	24.13	27.71	34.90	38.45	43.70	47.34	52.45	62.09
	2.91	3.15	3.95	4.72	5.57	6.37	7.35	8.23	10.43	11.63	14.56	16.14	18.34	20.08	21.84	25.48
22555	6.40	6.91	8.71	10.42	12.39	14.19	16.46	18.47	23.59	27.05	34.07	37.53	42.52	46.20	51.02	60.43
	2.80	3.02	3.79	4.53	5.35	6.12	7.06	7.89	10.02	11.16	13.98	15.49	17.61	19.27	20.97	24.45
22860	6.26	6.75	8.50	10.20	12.09	13.87	16.06	18.03	23.04	26.41	33.27	36.65	41.38	45.09	49.66	58.81
	2.68	2.90	3.64	4.34	5.13	5.88	6.77	7.57	9.61	10.71	13.42	14.88	16.91	18.50	20.13	23.49
23165	6.14	6.62	8.33	9.98	11.83	13.57	15.71	17.64	22.51	25.80	32.50	35.81	40.29	44.01	48.34	57.28
	2.58	2.78	3.50	4.18	4.93	5.64	6.50	7.28	9.25	10.30	12.90	14.30	16.25	17.78	19.35	22.57
23470	6.01	6.49	8.15	9.76	11.57	13.28	15.36	17.24	22.02	25.18	31.75	34.98	39.27	42.99	47.10	55.79
	2.48	2.68	3.37	4.02	4.74	5.42	6.26	7.00	8.88	9.89	12.39	13.74	15.63	17.10	18.60	21.70
23774	5.88	6.34	7.98	9.55	11.31	13.00	15.01	16.85	21.54	24.61	31.04	34.16	38.26	41.98	45.89	54.37
	2.39	2.58	3.23	3.86	4.56	5.22	6.02	6.74	8.55	9.51	11.92	13.22	15.03	16.44	17.89	20.86
24079	5.77	6.21	7.80	9.36	11.07	12.71	14.68	16.47	21.05	24.07	30.29	33.40	37.30	41.02	44.74	52.99
	2.30	2.48	3.12	3.72	4.39	5.03	5.79	6.47	8.23	9.16	11.47	12.72	14.46	15.81	17.22	20.08
24384	5.64	6.10	7.66	9.16	10.82	12.43	14.36	16.12	20.59	23.48	29.55	32.66	36.35	40.07	43.62	51.67
	2.21	2.39	3.00	3.59	4.23	4.84	5.57	6.24	7.92	8.81	11.04	12.24	13.92	15.23	16.57	19.33
24689	5.53	5.96	7.50	8.97	10.60	12.17	14.05	15.77	20.15	22.89	28.82	31.93	35.46	39.18	42.55	50.39
	2.13	2.30	2.88	3.45	4.07	4.67	5.37	6.01	7.63	8.49	10.63	11.80	13.41	14.68	15.96	18.63
24994	5.38	5.82	7.35	8.80	10.39	11.92	13.76	15.45	19.71	22.34	28.10	31.23	34.60	38.30	41.51	49.16
	2.05	2.21	2.78	3.32	3.92	4.49	5.18	5.79	7.35	8.18	10.25	11.36	12.93	14.14	15.38	17.95
25298	5.26	5.69	7.19	8.59	10.15	11.66	13.45	15.10	19.30	21.80	27.45	30.55	33.77	37.44	40.51	47.98
	1.98	2.14	2.69	3.22	3.79	4.34	5.00	5.58	7.09	7.89	9.88	10.96	12.46	13.63	14.84	17.30
25603	5.16	5.57	7.04	8.40	9.93	11.39	13.14	14.76	18.91	21.27	26.79	29.90	32.96	36.64	39.54	46.84
	1.92	2.07	2.61	3.10	3.66	4.18	4.83	5.41	6.82	7.61	9.52	10.58	12.02	13.14	14.31	16.69
25908	5.04	5.44	6.88	8.23	9.71	11.16	12.87	14.44	18.44	20.79	26.15	29.21	32.19	35.85	38.63	45.75
	1.85	1.99	2.52	3.00	3.54	4.05	4.67	5.22	6.59	7.35	9.20	10.20	11.60	12.69	13.80	16.11
26213	4.94	5.34	6.74	8.05	9.50	10.91	12.60	14.14	18.03	20.28	25.53	28.54	31.43	35.06	37.73	44.67
	1.79	1.94	2.43	2.90	3.41	3.92	4.52	5.04	6.36	7.09	8.88	9.85	11.19	12.25	13.32	15.55
26518	4.83	5.22	6.58	7.88	9.29	10.68	12.31	13.83	17.61	19.83	24.95	27.88	30.70	34.32	36.86	43.66
	1.73	1.88	2.34	2.81	3.31	3.79	4.36	4.88	6.14	6.84	8.58	9.51	10.81	11.83	12.87	15.01
26822	4.74	5.12	6.45	7.72	9.10	10.46	12.05	13.54	17.20	19.39	24.40	27.27	30.03	33.59	36.03	42.65
	1.69	1.82	2.27	2.72	3.21	3.67	4.21	4.72	5.93	6.62	8.28	9.19	10.44	11.42	12.43	14.50
27127	4.64	5.00	6.31	7.54	8.90	10.24	11.82	13.26	16.82	18.95	23.86	26.66	29.34	32.89	35.21	41.72
	1.63	1.75	2.20	2.62	3.09	3.56	4.08	4.58	5.74	6.39	8.01	8.88	10.09	11.04	12.02	14.02
27432	4.55	4.91	6.18	7.39	8.72	10.02	11.55	12.97	16.46	18.53	23.30	26.06	28.69	32.22	34.42	40.77
	1.57	1.70	2.14	2.55	3.00	3.44	3.95	4.43	5.56	6.18	7.74	8.59	9.76	10.68	11.63	13.55
27737	4.46	4.81	6.05	7.26	8.53	9.80	11.33	12.71	16.08	18.12	22.81	25.48	28.06	31.56	33.68	39.88
	1.53	1.64	2.07	2.48	2.90	3.32	3.83	4.29	5.37	5.98	7.48	8.30	9.44	10.33	11.23	13.11
28042	4.37	4.72	5.95	7.10	8.37	9.60	11.09	12.44	15.73	17.73	22.29	24.92	27.45	30.92	32.93	39.02
	1.48	1.60	2.01	2.39	2.81	3.22	3.72	4.15	5.19	5.79	7.25	8.04	9.13	9.99	10.87	12.69
28346	4.29	4.64	5.82	6.96	8.20	9.41	10.87	12.21	15.41	17.35	21.84	24.40	26.88	30.31	32.23	38.19
	1.44	1.54	1.94	2.32	2.72	3.12	3.60	4.02	5.03	5.60	7.01	7.77	8.84	9.67	10.53	12.28
28651	4.20	4.55	5.70	6.82	8.02	9.23	10.65	11.96	15.07	16.98	21.36	23.87	26.28	29.69	31.56	37.38
	1.40	1.50	1.88	2.24	2.64	3.03	3.48	3.91	4.87	5.42	6.80	7.53	8.56	9.36	10.20	11.89
28956	4.11	4.46	5.60	6.69	7.88	9.03	10.43	11.73	14.75	16.60	20.92	23.37	25.74	29.11	30.88	36.60
	1.35	1.45	1.83	2.18	2.56	2.93	3.38	3.79	4.71	5.25	6.58	7.29	8.28	9.07	9.88	11.52
29261	4.04	4.37	5.48	6.56	7.72	8.85	10.24	11.48	14.44	16.28	20.48	22.89	25.21	28.54	30.25	35.82
	1.31	1.41	1.78	2.11	2.49	2.84	3.28	3.67	4.56	5.09	6.37	7.07	8.04	8.80	9.57	11.16

STANDARD ASD LOAD TABLE

LONGSPAN STEEL JOISTS, LH-SERIES

Based on a 50 ksi (345 MPa) Maximum Yield Strength
Adopted by the Steel Joist Institute May 1, 2000
Revised to April 27, 2010 – Effective July 1, 2020

The **BLACK** figures in the Load Table give the TOTAL safe uniformly distributed load-carrying capacities, in pounds per linear foot, of **ASD** LH-Series Steel Joists.

The approximate joist weights, in pounds per linear foot (kiloNewtons per meter), given in the Load Table may be added to the other building weights to determine the DEAD load. In all cases the DEAD load, including the joist self-weight, must be deducted from the TOTAL load to determine the LIVE load. The approximate joist weights do not include accessories.

The **RED** figures in the Load Table represent the uniform load, in pounds per linear foot (kiloNewtons per meter), which will produce an approximate joist deflection of 1/360 of the span. This load can be linearly prorated to obtain the uniform load for supplementary deflection criteria (i.e. a uniform load that will produce a joist deflection of 1/240 of the span may be obtained by multiplying the **RED** figures by 360/240). In no case shall the prorated load exceed the TOTAL load-carrying capacity of the joist.

User Note: For floor joists, the RED figures may control the joist selection, and for longer spans consideration shall be given to the effects of camber on slab thickness. If a deeper joist designation cannot be used, CJ-Series composite joists may also be considered to take advantage of increased stiffness available due to composite action.

The Load Table applies to joists with either parallel chords or pitched top chords. Joists can have a top chord pitch up to 1/2 inch per foot (42 mm per meter). If the pitch exceeds this limit, the Load Table does not apply. When top chords are pitched, the load-carrying capacities are determined by the nominal depth of the joists at the center of the span. Sloped parallel-chord joists shall use span as defined by the length along the slope.

Where the joist span is in the **RED SHADED** area of the Load Table, the row of bridging nearest the mid span shall be diagonal bridging with bolted connections at chords and intersections. Hoisting cables shall not be released until this row of bolted diagonal bridging is completely installed. The **RED SHADED** area extends up through 60'–0" (18288 mm).

Where the joist span is in the **BLUE SHADED** area of the Load Table, all rows of bridging shall be diagonal bridging with bolted connections at chords and intersections. Hoisting cables shall not be released until the two rows of bridging nearest the third points are completely installed. The **BLUE SHADED** area starts after 60'–0" (18288 mm) and extends up through 100'–0" (30175 mm).

The approximate gross moment of inertia (not adjusted for shear deformation) of a standard joist listed in the Load Table may be determined as follows:

$I_j = 26.767(W)(L^3)(10^{-6})$ in^4 or $2.6953(W)(L^3)(10^{-5})$ mm^4, where W= **RED** figure in the Load Table, and
L = (span – 0.33) in feet or (span – 102) in millimeters

Loads for span increments not explicitly given in the Load Table may be determined using linear interpolation between the load values given in adjacent span rows. For spans shorter than the first span listed in the Load Table, the capacity shall be equal to that of the shortest listed span.

ASD

STANDARD LOAD TABLE/OPEN WEB STEEL JOISTS, LH-SERIES
Based on a 50 ksi Maximum Yield Strength - Loads Shown In Pounds Per Linear Foot (plf)

Joist Designation	18LH02	18LH03	18LH04	18LH05	18LH06	18LH07	18LH08	18LH09	18LH10	18LH11	18LH12	18LH13	18LH14	18LH15	18LH16	18LH17	18LH18	18LH19	18LH20
Depth (in.)	18	18	18	18	18	18	18	18	18	18	18	18	18	18	18	18	18	18	18
Approx. Wt. (lbs./ft.)	10	11	12	14	15	17	19	21	23	25	28	33	36	39	44	50	57	62	83
Span (ft.) ↓																			
18	805	896	1039	1175	1438	1529	1728	1989	2231	2489	2751								
	805	896	1039	1175	1438	1529	1728	1889	2231	2489	2751								
19	748	833	966	1093	1329	1414	1598	1831	2054	2291	2533								
	748	833	966	1093	1329	1414	1500	1601	2054	2291	2533								
20	697	776	899	1018	1231	1310	1480	1688	1895	2114	2337	2805							
	696	774	896	1009	1169	1229	1283	1369	1816	2005	2226	2576							
21	649	723	838	949	1143	1216	1373	1562	1752	1955	2161	2587	2825						
	600	667	772	870	1008	1059	1105	1180	1565	1728	1918	2220	2413						
22	606	675	783	886	1063	1130	1277	1448	1624	1812	2003	2391	2612	2829					
	520	579	670	755	874	919	959	1024	1358	1500	1664	1926	2094	2276					
23	567	631	732	829	990	1053	1189	1345	1508	1683	1860	2216	2420	2622					
	454	505	585	659	764	803	838	894	1186	1310	1454	1683	1829	1987					
24	531	591	685	776	924	982	1110	1250	1403	1566	1732	2059	2248	2436	2811				
	399	444	514	579	671	705	736	786	1042	1151	1277	1478	1607	1746	1922				
25	497	554	643	728	863	918	1037	1167	1309	1461	1615	1916	2093	2268	2587	2950			
	353	392	454	511	593	623	650	694	920	1016	1128	1306	1419	1542	1697	1929			
26	468	521	604	684	809	840	876	936	1223	1365	1509	1788	1953	2115	2390	2725			
	313	348	403	454	526	553	577	616	817	902	1001	1159	1260	1369	1506	1712			
27	442	493	571	648	749	809	843	901	1145	1278	1413	1671	1825	1978	2214	2524	2916		
	284	317	367	414	469	513	534	571	728	804	893	1033	1123	1220	1343	1526	1739		
28	418	467	535	614	696	780	812	868	1074	1198	1325	1565	1710	1852	2057	2345	2709		
	259	289	329	378	419	476	496	527	652	720	799	925	1006	1093	1203	1367	1557		
29	391	438	500	581	648	726	784	838	1009	1126	1245	1469	1604	1738	1916	2184	2523	2811	
	234	262	296	345	377	428	462	491	586	647	718	832	904	982	1081	1229	1400	1538	
30	367	409	469	543	605	678	758	810	949	1059	1171	1380	1508	1634	1789	2039	2356	2624	
	212	236	266	311	340	386	427	458	529	584	648	750	816	886	975	1108	1263	1387	
31	345	382	440	508	566	635	717	783	894	996	1104	1300	1420	1538	1674	1909	2205	2456	
	193	213	242	282	307	349	387	418	479	529	587	679	738	802	883	1003	1143	1256	
32	324	359	413	476	531	595	680	759	844	934	1042	1226	1336	1451	1570	1790	2068	2303	2862
	175	194	219	256	280	317	351	380	435	480	533	617	671	729	802	911	1038	1141	1402
33	306	337	388	448	499	559	641	713	798	878	980	1157	1255	1370	1475	1682	1943	2164	2689
	160	177	200	233	254	288	320	346	396	437	485	562	611	664	731	830	946	1039	1277
34	289	317	365	421	470	526	604	671	754	826	923	1089	1182	1291	1389	1584	1829	2038	2532
	147	161	182	212	232	264	292	316	362	399	443	513	558	606	667	758	864	949	1167
35	273	299	344	397	443	496	571	633	711	779	870	1027	1114	1217	1310	1494	1725	1922	2388
	135	148	167	195	212	241	267	289	331	366	406	470	511	555	611	695	791	869	1068
36	259	283	325	375	418	469	540	598	672	736	822	970	1053	1150	1237	1411	1630	1816	2256
	124	136	153	179	195	222	246	266	304	336	373	432	469	510	561	638	727	798	981

ASD

STANDARD LOAD TABLE/OPEN WEB STEEL JOISTS, LH-SERIES
Based on a 50 ksi Maximum Yield Strength - Loads Shown In Pounds Per Linear Foot (plf)

Joist Designation	20LH02	20LH03	20LH04	20LH05	20LH06	20LH07	20LH08	20LH09	20LH10	20LH11	20LH12	20LH13	20LH14	20LH15	20LH16	20LH17	20LH18	20LH19	20LH20
Depth (in.)	20	20	20	20	20	20	20	20	20	20	20	20	20	20	20	20	20	20	20
Approx. Wt. (lbs./ft.)	10	11	12	14	15	17	19	21	23	25	28	34	37	40	45	55	61	69	87
Span (ft.) ↓																			
20	712	827	910	1060	1226	1427	1550	1771	1912	2311	2555								
	680	749	910	1020	1226	1427	1487	1620	1747	2311	2555								
21	670	765	851	990	1146	1327	1442	1641	1772	2141	2367	2847							
	586	646	820	879	1146	1239	1282	1396	1506	2141	2367	2798							
22	627	715	796	927	1071	1236	1343	1524	1645	1988	2198	2636	2879						
	509	560	712	763	1007	1076	1112	1212	1307	1885	2093	2428	2640						
23	587	670	746	865	1005	1154	1254	1418	1530	1850	2045	2447	2672	2895					
	444	489	621	666	880	939	971	1058	1141	1647	1828	2121	2306	2507					
24	551	629	700	811	942	1079	1172	1322	1426	1724	1906	2276	2486	2693					
	390	430	546	585	773	825	853	930	1003	1447	1606	1863	2026	2202					
25	517	590	658	756	886	1011	1097	1234	1332	1610	1780	2121	2317	2510	2914				
	345	380	482	517	683	729	754	821	886	1278	1418	1646	1789	1945	2143				
26	442	469	574	616	822	878	908	990	1068	1506	1665	1981	2164	2344	2691				
	306	337	428	459	606	647	669	729	786	1134	1259	1461	1588	1726	1902				
27	437	463	566	609	791	845	873	953	1028	1411	1561	1853	2025	2194	2493	2846			
	303	333	406	437	561	599	619	675	724	1011	1123	1302	1416	1539	1696	1930			
28	431	458	558	602	763	814	842	918	991	1325	1465	1737	1898	2056	2316	2644			
	298	317	386	416	521	556	575	626	673	905	1005	1166	1268	1378	1519	1728			
29	410	452	528	595	723	786	813	886	956	1246	1378	1632	1782	1931	2157	2463	2845		
	274	302	352	395	477	518	536	581	626	814	904	1048	1140	1239	1365	1554	1771		
30	388	434	496	571	679	760	785	856	924	1173	1298	1535	1677	1817	2014	2299	2657	2965	
	250	280	320	366	427	484	500	542	585	734	815	946	1028	1118	1232	1402	1598	1759	
31	365	414	467	544	635	711	760	828	894	1107	1224	1446	1580	1712	1885	2152	2486	2775	
	228	258	291	337	386	438	468	507	545	665	738	856	931	1012	1115	1269	1447	1592	
32	344	395	440	513	596	667	722	802	865	1045	1156	1364	1491	1615	1768	2018	2332	2602	
	208	238	265	308	351	398	428	475	510	604	670	778	846	919	1013	1152	1314	1446	
33	325	372	416	484	560	627	687	778	839	986	1094	1289	1409	1526	1661	1896	2191	2446	
	190	218	243	281	320	362	395	437	479	550	610	708	770	837	922	1050	1197	1317	
34	307	352	393	458	527	590	654	755	814	928	1036	1220	1329	1444	1564	1785	2063	2302	2867
	174	200	223	258	292	331	365	399	448	502	558	647	704	765	843	959	1093	1203	1483
35	291	333	372	434	497	556	621	712	791	875	977	1155	1254	1369	1475	1684	1946	2171	2704
	160	184	205	238	267	303	336	366	411	460	511	593	644	700	772	878	1001	1102	1358
36	275	316	353	411	469	526	588	673	748	827	923	1091	1184	1294	1394	1591	1838	2051	2554
	147	169	189	219	246	278	309	336	377	422	469	544	592	643	709	806	919	1012	1247
37	262	299	335	390	444	497	558	636	707	782	873	1033	1121	1224	1319	1505	1739	1941	2417
	136	156	174	202	226	256	285	309	346	389	432	501	545	592	652	742	846	931	1148
38	249	283	318	371	421	471	530	603	670	741	828	979	1062	1160	1249	1426	1648	1839	2290
	126	143	161	187	209	236	262	285	320	359	398	462	502	546	602	685	781	859	1059
39	237	269	303	353	399	447	503	572	636	703	785	929	1008	1101	1186	1353	1564	1745	2173
	117	133	149	173	192	218	242	264	296	331	368	427	464	505	556	633	722	794	979
40	225	255	289	336	379	425	479	544	604	668	746	882	957	1046	1127	1286	1486	1658	2065
	108	123	139	161	178	202	225	244	274	307	341	395	430	467	515	586	668	735	906

ASD

STANDARD LOAD TABLE/OPEN WEB STEEL JOISTS, LH-SERIES
Based on a 50 ksi Maximum Yield Strength - Loads Shown In Pounds Per Linear Foot (plf)

Joist Designation	24LH03	24LH04	24LH05	24LH06	24LH07	24LH08	24LH09	24LH10	24LH11	24LH12	24LH13	24LH14	24LH15	24LH16	24LH17	24LH18	24LH19	24LH20	24LH21
Depth (in.)	24	24	24	24	24	24	24	24	24	24	24	24	24	24	24	24	24	24	24
Approx. Wt. (lbs./ft.)	11	12	13	16	17	18	21	23	25	27	32	35	38	42	49	57	62	79	88
Span (ft.) ↓																			
24	664	723	827	1041	1214	1287	1661	1784	1948	2235	2688	2936							
	664	723	827	1041	1214	1287	1618	1716	1796	2235	2688	2936							
25	626	681	779	981	1140	1208	1555	1670	1824	2093	2511	2743	2972						
	598	681	779	981	1140	1208	1429	1515	1587	2093	2445	2660	2893						
26	590	642	735	925	1072	1136	1458	1565	1710	1962	2350	2567	2782						
	530	642	695	925	1020	1083	1268	1345	1408	1864	2171	2361	2568						
27	557	606	694	874	1009	1069	1369	1469	1607	1843	2203	2407	2608						
	473	580	620	827	910	966	1131	1199	1256	1662	1935	2105	2290						
28	527	573	656	827	948	1008	1288	1382	1511	1734	2069	2260	2449	2835					
	423	519	555	741	814	865	1013	1074	1124	1488	1733	1885	2050	2263					
29	498	542	621	782	895	951	1216	1302	1423	1633	1946	2126	2304	2641					
	381	467	499	666	732	778	910	965	1011	1338	1558	1695	1843	2035					
30	472	514	588	741	848	899	1144	1228	1341	1540	1833	2002	2170	2466	2819				
	343	421	450	601	661	702	821	871	912	1207	1406	1529	1663	1836	2094				
31	448	487	555	703	800	850	1084	1160	1264	1455	1729	1889	2047	2308	2638				
	311	381	408	544	598	635	744	789	826	1093	1272	1384	1505	1662	1895				
32	425	462	521	667	748	806	1020	1072	1166	1376	1633	1785	1934	2164	2474	2860			
	282	346	370	494	543	577	675	716	750	993	1156	1257	1367	1509	1721	1964			
33	404	440	492	635	706	764	955	995	1054	1304	1545	1689	1830	2034	2325	2688			
	257	315	337	450	495	525	615	652	683	904	1053	1145	1245	1375	1568	1790			
34	342	419	449	604	665	707	832	882	927	1236	1464	1600	1734	1915	2189	2530	2832		
	235	288	308	411	452	480	562	596	624	826	962	1046	1138	1256	1432	1635	1804		
35	339	398	446	579	638	677	808	856	900	1174	1389	1517	1644	1806	2064	2386	2671		
	226	265	297	382	421	447	530	559	588	756	881	958	1042	1150	1312	1497	1653		
36	336	379	440	555	613	649	785	832	875	1115	1319	1441	1562	1706	1950	2255	2523		
	218	246	285	356	393	416	501	528	555	695	809	880	957	1056	1205	1375	1518		
37	323	360	419	530	588	622	764	809	851	1061	1254	1370	1485	1614	1845	2133	2387	2982	
	204	227	264	331	367	388	460	500	525	639	744	810	881	972	1109	1265	1397	1729	
38	307	343	399	504	565	597	731	788	829	1009	1193	1298	1413	1530	1749	2021	2262	2826	
	188	210	244	306	343	362	424	474	498	590	687	747	812	897	1023	1167	1288	1595	
39	293	327	380	480	541	572	696	768	807	957	1135	1232	1346	1451	1659	1918	2147	2682	2993
	175	195	226	284	320	338	393	439	472	545	635	690	751	829	945	1079	1191	1474	1631
40	279	312	363	457	516	545	663	737	787	910	1078	1170	1279	1379	1577	1823	2040	2548	2844
	162	182	210	263	297	314	363	406	449	505	588	639	695	768	876	999	1103	1365	1510
41	267	298	347	437	491	520	632	702	768	865	1026	1113	1217	1312	1500	1734	1941	2424	2706
	152	169	196	245	276	292	337	378	418	468	545	593	645	712	813	927	1024	1267	1402
42	255	285	331	417	468	497	602	668	734	824	977	1061	1159	1250	1429	1652	1849	2309	2578
	141	158	182	228	257	272	313	351	388	435	507	552	600	662	755	862	952	1178	1303
43	244	273	317	399	446	475	574	637	701	786	932	1011	1105	1192	1363	1575	1763	2202	2458
	132	148	171	211	239	254	292	326	361	406	472	514	559	617	704	803	886	1097	1214
44	234	262	304	381	426	455	548	608	671	751	890	966	1055	1138	1301	1504	1683	2103	2347
	124	138	160	197	223	238	272	304	337	378	440	479	521	575	656	749	827	1023	1132
45	224	251	291	364	407	435	524	582	642	717	850	923	1009	1088	1243	1437	1609	2009	2243
	116	130	150	184	208	222	254	285	315	353	412	448	487	538	613	700	772	956	1058
46	215	241	280	348	389	417	501	556	616	686	813	883	965	1041	1190	1375	1539	1922	2146
	109	122	141	172	195	208	238	266	294	331	385	419	456	503	574	655	723	895	990
47	207	231	269	334	373	400	480	533	590	657	779	845	924	996	1139	1317	1474	1841	2055
	102	114	132	161	182	196	223	249	276	310	361	393	427	471	538	614	677	838	927
48	199	222	258	320	357	384	460	511	567	630	747	810	886	955	1092	1262	1412	1764	1969
	96	107	124	152	171	184	209	234	259	291	339	368	401	442	504	576	636	787	870

ASD

STANDARD LOAD TABLE/OPEN WEB STEEL JOISTS, LH-SERIES

Based on a 50 ksi Maximum Yield Strength - Loads Shown In Pounds Per Linear Foot (plf)

Joist Designation	28LH05	28LH06	28LH07	28LH08	28LH09	28LH10	28LH11	28LH12	28LH13	28LH14	28LH15	28LH16	28LH17	28LH18	28LH19	28LH20	28LH21	28LH22	28LH23
Depth (in.)	28	28	28	28	28	28	28	28	28	28	28	28	28	28	28	28	28	28	28
Approx. Wt. (lbs./ft.)	13	16	17	18	21	23	25	27	30	35	38	42	49	56	63	79	88	102	111
Span (ft.) ↓																			
28	626	831	968	1036	1342	1438	1570	1839	2034	2459	2665								
	626	831	968	1036	1342	1438	1570	1839	1944	2459	2665								
29	596	791	920	983	1271	1362	1487	1741	1922	2324	2518	2962							
	596	791	920	983	1271	1362	1487	1674	1747	2324	2518	2839							
30	568	755	874	934	1204	1291	1409	1651	1818	2199	2383	2798							
	568	755	874	934	1186	1291	1380	1510	1576	2130	2317	2561							
31	542	720	831	889	1143	1225	1337	1566	1722	2083	2257	2647							
	542	720	818	873	1074	1169	1249	1367	1427	1928	2098	2319							
32	517	687	791	846	1085	1163	1270	1488	1633	1975	2140	2507	2888						
	499	658	743	793	975	1062	1134	1242	1296	1751	1905	2106	2406						
33	494	656	753	806	1032	1106	1207	1414	1550	1875	2032	2377	2738						
	454	600	677	722	888	967	1033	1131	1181	1595	1735	1918	2192						
34	472	627	718	768	982	1052	1149	1346	1474	1782	1931	2257	2592	2936					
	415	548	618	660	811	883	944	1033	1079	1457	1585	1752	2002	2286					
35	451	600	685	733	935	1002	1094	1282	1402	1695	1837	2137	2445	2791					
	380	502	566	604	743	809	865	946	988	1335	1452	1605	1834	2094					
36	432	574	654	700	892	956	1043	1223	1335	1614	1750	2018	2310	2655	2995				
	349	461	520	555	682	743	794	869	907	1226	1333	1474	1684	1923	2127				
37	414	550	625	669	851	912	996	1166	1272	1539	1668	1910	2186	2527	2833				
	321	424	478	511	628	684	731	800	835	1128	1227	1356	1550	1770	1958				
38	396	527	598	640	813	871	951	1113	1214	1468	1591	1810	2071	2395	2685				
	296	391	441	471	579	631	674	738	770	1040	1132	1251	1429	1632	1806				
39	380	505	573	612	777	833	909	1065	1160	1402	1520	1717	1965	2273	2548				
	274	362	408	435	536	583	623	682	712	962	1046	1157	1321	1509	1670				
40	365	485	549	587	743	797	870	1019	1108	1340	1453	1632	1867	2159	2421				
	254	335	378	403	496	540	577	632	659	891	969	1071	1224	1398	1546				
41	350	466	526	562	708	763	833	976	1060	1282	1390	1553	1777	2055	2303	2884			
	236	311	351	374	460	501	536	586	612	827	899	994	1136	1297	1435	1782			
42	337	448	505	540	667	729	780	857	895	1228	1331	1479	1692	1957	2194	2747			
	219	289	326	348	428	466	498	545	569	769	836	924	1056	1206	1334	1657			
43	323	429	484	517	639	704	762	837	874	1177	1275	1410	1614	1866	2092	2620	2925		
	205	270	305	325	400	439	475	520	543	716	779	861	983	1123	1243	1543	1708		
44	310	412	464	496	612	679	736	818	854	1129	1223	1346	1541	1782	1998	2501	2793		
	192	253	285	305	375	414	448	496	518	668	726	803	917	1048	1159	1439	1593		
45	297	395	445	475	586	651	711	800	835	1083	1174	1287	1473	1703	1909	2390	2669	2936	
	180	238	267	285	351	388	423	476	495	624	679	750	857	979	1083	1345	1489	1688	
46	286	379	427	456	563	625	682	782	816	1040	1128	1231	1409	1629	1827	2287	2553	2808	
	169	223	251	268	329	364	397	454	472	584	635	702	802	916	1013	1258	1393	1579	
47	275	364	410	438	540	600	655	766	799	999	1084	1179	1349	1560	1749	2190	2445	2689	
	159	209	236	252	309	342	373	435	452	547	595	658	751	858	950	1179	1305	1480	
48	265	350	394	420	519	576	629	737	782	958	1043	1130	1293	1495	1676	2099	2344	2578	2950
	150	197	222	236	291	322	351	408	433	513	558	617	705	805	891	1106	1225	1389	1510
49	255	337	379	403	499	554	605	709	766	919	1004	1084	1240	1434	1608	2014	2248	2473	2836
	142	186	209	222	274	303	331	383	415	482	525	580	663	757	837	1040	1151	1305	1419
50	245	324	365	387	481	533	582	682	751	882	964	1041	1191	1377	1544	1933	2159	2374	2727
	133	175	197	209	258	285	312	361	396	454	493	546	623	712	788	978	1083	1228	1335
51	237	313	352	371	463	513	561	656	722	848	926	1000	1144	1323	1484	1858	2074	2281	2625
	126	166	186	196	243	269	294	340	373	427	465	514	587	670	742	921	1020	1156	1257
52	228	301	339	357	446	495	540	632	694	815	891	962	1101	1273	1427	1786	1995	2194	2529
	119	156	176	185	228	255	278	321	352	403	438	485	554	632	700	869	962	1090	1186
53	220	291	327	344	430	477	521	609	668	784	857	925	1059	1225	1373	1719	1920	2111	2437
	113	148	166	175	216	241	263	303	332	380	414	457	523	597	660	820	908	1029	1119
54	213	281	316	331	415	460	502	587	643	755	826	891	1020	1180	1322	1656	1849	2033	2351
	107	140	158	165	204	228	249	285	314	359	391	432	494	564	624	775	858	973	1058
55	206	271	305	319	401	444	485	566	620	728	796	859	983	1137	1275	1596	1782	1960	2269
	102	133	150	156	193	215	236	270	297	340	370	409	467	534	591	733	812	921	1001
56	199	262	295	308	387	429	468	546	598	702	767	828	948	1096	1229	1539	1718	1890	2191
	97	126	142	148	183	204	223	256	281	322	350	387	443	505	559	695	769	872	948

ASD

STANDARD LOAD TABLE/OPEN WEB STEEL JOISTS, LH-SERIES
Based on a 50 ksi Maximum Yield Strength - Loads Shown In Pounds Per Linear Foot (plf)

Joist Designation	32LH06	32LH07	32LH08	32LH09	32LH10	32LH11	32LH12	32LH13	32LH14	32LH15	32LH16	32LH17	32LH18	32LH19	32LH20	32LH21	32LH22	32LH23	32LH24
Depth (in.)	32	32	32	32	32	32	32	32	32	32	32	32	32	32	32	32	32	32	32
Approx. Wt. (lbs./ft.)	14	16	17	21	21	24	27	30	33	35	42	49	56	62	78	87	101	110	124
Span (ft.) ↓																			
32	655	735	829	1099	1184	1296	1522	1789	1916	2050	2691								
	655	735	829	1099	1184	1296	1522	1789	1916	2050	2691								
33	629	705	793	1049	1131	1238	1453	1705	1827	1954	2561	2951							
	629	705	793	1049	1131	1238	1453	1705	1827	1870	2553	2920							
34	605	678	760	1003	1080	1183	1388	1627	1742	1864	2440	2812							
	605	678	760	1003	1080	1183	1388	1605	1653	1708	2332	2668							
35	581	651	728	959	1033	1131	1328	1553	1663	1779	2326	2681							
	581	651	728	938	1033	1131	1323	1470	1514	1564	2136	2443							
36	559	626	698	917	989	1082	1271	1484	1589	1700	2220	2558	2890						
	559	626	689	861	950	1040	1215	1350	1391	1437	1961	2244	2563						
37	537	602	670	878	947	1036	1217	1419	1519	1626	2120	2443	2760						
	524	584	634	793	875	957	1118	1243	1280	1322	1805	2065	2359						
38	517	580	643	842	907	993	1166	1358	1454	1555	2026	2335	2638						
	484	539	585	731	807	883	1032	1146	1181	1220	1665	1905	2176						
39	498	558	617	807	870	952	1118	1300	1392	1490	1938	2234	2524	2890					
	447	498	540	676	746	816	954	1060	1091	1127	1539	1761	2012	2230					
40	479	538	593	774	834	913	1073	1246	1334	1427	1856	2139	2416	2763					
	414	461	501	626	691	756	883	981	1011	1044	1426	1631	1863	2066					
41	462	518	570	743	801	877	1030	1195	1279	1369	1778	2049	2315	2644					
	384	428	465	581	641	701	820	911	938	969	1323	1513	1729	1917					
42	445	499	549	714	770	842	989	1146	1228	1314	1705	1956	2220	2532					
	357	398	432	540	596	652	762	847	872	901	1230	1407	1608	1782					
43	430	482	528	687	740	810	951	1101	1179	1262	1629	1865	2130	2422					
	333	371	402	503	555	607	710	789	812	839	1146	1310	1497	1660					
44	414	465	509	660	712	779	915	1058	1133	1212	1555	1781	2046	2312	2900				
	310	346	375	469	518	567	662	736	758	783	1069	1222	1397	1548	1927				
45	400	449	490	636	685	750	880	1017	1089	1166	1486	1702	1966	2210	2771				
	290	323	351	439	484	529	619	687	708	731	998	1142	1305	1447	1801				
46	386	433	473	612	660	722	848	979	1048	1122	1422	1628	1883	2114	2651	2961			
	271	302	328	410	453	495	579	643	663	684	934	1069	1221	1354	1685	1866			
47	373	419	456	590	636	696	817	943	1009	1080	1361	1559	1803	2025	2539	2835			
	254	283	307	385	424	464	542	603	621	641	875	1001	1144	1268	1579	1749			
48	361	405	440	566	613	671	788	908	972	1040	1305	1494	1729	1940	2433	2718	2990		
	239	266	288	361	398	436	509	566	583	602	821	940	1074	1190	1482	1641	1862		
49	349	391	425	544	591	647	760	875	937	1003	1252	1434	1658	1862	2334	2607	2869		
	224	250	271	339	374	409	478	531	547	565	772	883	1009	1118	1392	1542	1750		
50	338	379	411	516	571	625	734	817	843	870	1202	1376	1592	1787	2241	2503	2754		
	211	235	255	319	352	385	450	500	515	532	726	831	949	1052	1310	1451	1646		
51	326	366	397	498	550	602	712	801	826	853	1155	1323	1530	1717	2154	2405	2647	2985	
	199	223	242	302	332	363	428	480	495	511	684	782	894	991	1234	1366	1550	1689	
52	315	353	383	480	531	580	688	785	810	837	1111	1272	1471	1652	2071	2313	2545	2877	
	189	211	229	285	315	343	406	461	476	492	645	738	843	935	1163	1288	1462	1593	
53	304	341	369	463	512	560	664	771	795	821	1069	1224	1416	1589	1993	2226	2449	2775	2921
	179	200	216	270	297	325	384	444	458	473	609	697	796	882	1098	1216	1380	1504	1628
54	294	329	357	447	495	541	641	742	780	805	1029	1179	1364	1531	1920	2144	2359	2679	2813
	169	189	205	256	282	308	364	420	440	454	575	658	752	834	1038	1150	1305	1421	1539
55	284	318	345	432	478	522	619	715	766	791	992	1136	1314	1475	1850	2066	2273	2587	2711
	161	179	194	243	267	292	345	397	417	438	544	623	712	789	982	1088	1234	1344	1456
56	275	308	333	418	462	505	598	690	738	776	957	1096	1267	1423	1784	1993	2192	2499	2614
	153	170	184	230	254	277	327	376	395	422	516	590	674	747	930	1030	1169	1273	1379
57	266	298	322	404	445	488	578	666	713	763	923	1057	1223	1373	1722	1923	2116	2416	2523
	145	162	175	219	240	263	311	354	374	407	489	559	639	708	882	977	1108	1207	1307
58	257	288	312	391	430	473	559	643	688	750	891	1021	1181	1326	1662	1857	2043	2337	2436
	138	154	167	208	228	251	295	336	355	393	464	531	606	672	837	927	1051	1145	1240
59	249	279	302	379	416	458	541	621	665	725	861	986	1141	1281	1606	1794	1974	2262	2354
	131	146	159	198	217	239	281	319	337	374	440	504	576	638	794	880	999	1088	1178
60	242	271	293	367	402	443	524	600	643	701	833	954	1103	1238	1553	1734	1908	2190	2275
	125	140	151	189	206	227	267	304	321	355	419	479	547	607	755	836	949	1034	1120
61	234	262	284	356	389	429	508	581	622	678	805	922	1067	1198	1502	1678	1846	2122	2201
	119	133	144	180	196	216	255	288	304	338	398	456	521	577	718	796	903	984	1065
62	227	254	275	345	376	416	492	562	602	656	779	893	1033	1159	1454	1624	1786	2057	2130
	114	127	137	172	186	206	243	275	290	322	379	434	496	549	684	758	860	937	1014
63	220	247	267	335	364	403	477	544	583	635	755	864	1000	1123	1408	1572	1730	1994	2063
	108	121	131	164	178	196	232	262	276	306	361	413	472	524	652	722	819	892	966
64	214	240	259	325	353	390	463	527	564	616	731	837	969	1088	1364	1523	1676	1934	1998
	104	116	125	157	169	187	221	249	264	292	344	394	450	499	622	688	781	851	922

ASD

STANDARD LOAD TABLE/OPEN WEB STEEL JOISTS, LH-SERIES

Based on a 50 ksi Maximum Yield Strength - Loads Shown In Pounds Per Linear Foot (plf)

Joist Designation	36LH07	36LH08	36LH09	36LH10	36LH11	36LH12	36LH13	36LH14	36LH15	36LH16	36LH17	36LH18	36LH19	36LH20	36LH21	36LH22	36LH23	36LH24	36LH25
Depth (in.)	36	36	36	36	36	36	36	36	36	36	36	36	36	36	36	36	36	36	36
Approx. Wt. (lbs./ft.)	16	18	21	21	23	25	30	36	36	44	49	58	64	81	92	100	122	130	149
Span (ft.) ↓																			
36	582	668	851	1006	1064	1273	1533	1689	1828	2341	2699								
	582	668	851	1006	1064	1273	1533	1689	1828	2341	2699								
37	562	644	820	967	1022	1224	1471	1621	1754	2243	2586	2921							
	562	644	820	967	1022	1224	1471	1621	1754	2243	2586	2921							
38	543	620	780	929	983	1177	1412	1556	1684	2150	2479	2800							
	543	620	780	929	983	1177	1412	1556	1684	2139	2449	2799							
39	525	598	762	894	946	1132	1357	1494	1617	2063	2378	2687							
	525	598	762	894	946	1132	1357	1494	1592	1977	2264	2587							
40	508	576	735	860	910	1090	1304	1436	1554	1980	2283	2579	2986						
	508	576	735	839	910	1088	1275	1401	1475	1831	2097	2396	2661						
41	491	556	710	829	876	1049	1254	1381	1494	1902	2193	2477	2863						
	491	553	704	778	847	1009	1183	1300	1369	1699	1946	2224	2469						
42	475	537	685	798	844	1011	1206	1329	1438	1828	2108	2381	2748						
	469	514	655	724	787	938	1100	1209	1272	1580	1809	2068	2295						
43	460	518	661	769	814	974	1161	1279	1384	1758	2027	2290	2638						
	437	479	610	674	733	874	1025	1126	1185	1471	1685	1926	2138						
44	445	500	639	742	785	940	1118	1232	1333	1692	1950	2204	2535						
	408	447	569	629	684	815	956	1050	1106	1372	1572	1796	1994						
45	431	484	618	716	757	907	1078	1187	1285	1629	1878	2122	2437						
	381	417	532	587	639	762	893	981	1033	1282	1468	1678	1863						
46	417	467	597	691	731	875	1039	1145	1239	1569	1809	2044	2345	2949					
	356	391	497	550	598	713	836	918	967	1200	1374	1570	1744	2174					
47	404	452	578	667	706	845	1002	1104	1195	1512	1744	1970	2258	2839					
	334	366	466	515	560	668	783	860	906	1124	1287	1472	1634	2038					
48	392	437	559	645	682	816	967	1066	1153	1459	1682	1900	2175	2735					
	313	344	437	483	526	627	735	807	850	1055	1208	1381	1533	1912					
49	380	423	541	623	659	789	934	1029	1114	1407	1623	1834	2096	2636	2902				
	294	323	411	454	494	589	690	759	799	991	1135	1297	1440	1797	1991				
50	368	410	524	602	637	763	903	994	1076	1359	1562	1771	2022	2542	2799				
	277	304	387	427	465	554	650	714	751	933	1068	1221	1355	1690	1873				
51	357	397	508	583	616	738	872	961	1040	1310	1501	1710	1951	2450	2701				
	261	286	364	403	438	522	612	672	708	878	1006	1150	1276	1592	1764				
52	347	384	492	564	597	715	844	930	1006	1259	1443	1653	1876	2356	2608	2896			
	246	270	343	380	413	492	577	634	667	828	949	1084	1204	1501	1664	1889			
53	337	373	477	546	578	692	816	890	973	1212	1389	1598	1806	2267	2519	2787			
	232	255	324	358	390	465	545	599	630	782	896	1024	1136	1417	1571	1783			
54	327	361	462	527	559	670	790	871	942	1167	1338	1546	1739	2183	2435	2684	2977		
	220	241	306	339	368	439	515	566	596	739	846	967	1074	1340	1484	1685	1838		
55	318	350	449	509	542	650	765	843	912	1125	1289	1491	1676	2104	2351	2587	2878		
	208	228	290	320	349	416	487	535	563	699	801	915	1016	1267	1404	1594	1739		
56	309	340	435	491	526	630	741	817	884	1085	1243	1438	1616	2029	2267	2495	2783	2981	
	197	216	275	303	330	394	461	507	534	662	758	867	962	1200	1330	1510	1647	1787	
57	300	330	423	474	510	611	718	792	857	1047	1200	1388	1560	1958	2188	2408	2692	2877	
	187	204	260	288	313	373	437	481	506	628	719	822	912	1138	1261	1431	1562	1694	
58	292	321	411	454	495	593	697	768	809	1011	1158	1340	1506	1891	2112	2325	2606	2778	
	177	194	247	273	297	354	415	456	480	596	682	780	866	1080	1196	1358	1482	1607	
59	283	311	398	440	480	575	675	755	795	977	1119	1295	1455	1827	2041	2246	2524	2684	
	168	185	235	260	283	338	395	434	464	566	648	740	822	1025	1136	1290	1407	1526	
60	274	302	386	426	465	557	654	729	781	944	1082	1252	1407	1766	1973	2172	2446	2595	
	160	176	224	248	269	322	376	412	448	538	616	704	781	975	1080	1226	1338	1451	
61	266	293	374	413	451	540	634	706	769	913	1047	1211	1361	1709	1909	2101	2371	2510	2971
	153	168	214	236	257	307	359	392	434	512	586	670	743	927	1027	1166	1273	1380	1608
62	258	284	363	401	438	523	615	683	744	884	1013	1172	1317	1654	1847	2033	2299	2429	2875
	146	160	204	225	246	292	342	373	413	487	558	638	708	883	978	1111	1212	1314	1531
63	251	276	352	389	425	508	596	661	721	856	981	1135	1275	1601	1789	1969	2230	2352	2784
	140	153	195	215	234	279	327	356	394	464	531	607	674	841	932	1058	1155	1252	1458
64	244	268	342	378	412	493	579	641	698	829	950	1099	1236	1551	1733	1907	2165	2279	2697
	134	146	186	206	224	267	312	339	375	443	507	579	643	802	889	1009	1101	1194	1391
65	237	260	333	367	401	478	562	621	677	804	921	1066	1198	1504	1680	1849	2102	2209	2615
	128	140	179	197	214	255	298	323	358	422	484	553	614	766	848	963	1051	1139	1327
66	230	253	323	357	389	464	546	602	656	779	893	1033	1161	1458	1629	1793	2042	2142	2536
	122	134	171	188	205	243	285	309	342	403	462	528	586	731	810	920	1003	1088	1268
67	224	246	314	347	378	450	531	584	637	756	867	1003	1127	1415	1580	1739	1984	2078	2460
	117	128	163	180	196	232	273	295	327	385	441	504	560	699	774	879	959	1040	1211
68	218	239	306	338	368	437	516	567	618	734	841	973	1094	1373	1534	1688	1929	2017	2388
	112	123	157	173	188	222	262	283	312	369	422	482	536	668	740	841	917	994	1158
69	212	233	297	328	358	424	502	551	600	713	817	945	1062	1334	1490	1640	1876	1959	2319
	107	118	150	165	180	213	251	270	299	353	404	462	513	639	708	804	877	952	1109
70	207	227	289	320	348	412	488	535	583	693	794	918	1032	1296	1447	1593	1825	1903	2253
	103	113	144	159	173	204	240	259	286	338	387	442	491	612	678	770	840	911	1061
71	201	221	282	311	339	400	475	520	567	673	771	892	1003	1259	1406	1548	1776	1850	2189
	99	109	138	152	166	195	231	247	274	323	370	423	470	587	650	738	805	873	1017
72	196	215	275	303	330	389	463	505	551	654	750	868	975	1224	1367	1505	1729	1799	2129
	95	104	133	146	159	187	222	237	263	310	355	406	451	562	623	707	772	837	975

ASD

STANDARD LOAD TABLE/OPEN WEB STEEL JOISTS, LH-SERIES
Based on a 50 ksi Maximum Yield Strength - Loads Shown In Pounds Per Linerar Foot (plf)

Joist Designation	40LH08	40LH09	40LH10	40LH11	40LH12	40LH13	40LH14	40LH15	40LH16	40LH17	40LH18	40LH19	40LH20	40LH21	40LH22	40LH23	40LH24	40LH25
Depth (in.)	40	40	40	40	40	40	40	40	40	40	40	40	40	40	40	40	40	40
Approx. Wt. (lbs./ft.)	16	21	21	22	25	30	35	36	42	51	56	64	81	93	100	121	127	148
Span (ft.) ↓																		
40	519	705	839	879	1068	1297	1480	1655	1963	2377	2685							
	519	705	839	879	1068	1297	1480	1655	1963	2377	2685							
41	504	682	810	850	1032	1251	1427	1597	1891	2290	2586							
	504	682	810	850	1032	1251	1427	1597	1891	2290	2586							
42	490	660	783	821	997	1207	1377	1540	1822	2206	2492	2912						
	490	660	783	821	997	1207	1377	1540	1822	2206	2492	2874						
43	475	640	757	794	964	1165	1329	1487	1756	2127	2403	2802						
	475	640	757	794	964	1165	1329	1487	1756	2106	2403	2677						
44	462	620	732	767	932	1125	1284	1436	1694	2052	2318	2698						
	462	620	732	767	932	1125	1284	1436	1694	1965	2246	2497						
45	448	601	708	742	902	1087	1240	1387	1635	1980	2236	2599						
	448	601	686	742	902	1061	1217	1357	1490	1836	2099	2333						
46	435	582	685	718	873	1050	1198	1340	1578	1911	2159	2505						
	435	582	642	696	847	993	1139	1270	1394	1718	1964	2183						
47	423	564	663	695	845	1015	1159	1296	1524	1846	2086	2416						
	418	546	602	652	794	931	1067	1190	1307	1610	1840	2046						
48	411	547	642	673	818	982	1121	1254	1473	1784	2015	2331	2933					
	392	512	565	612	745	873	1001	1116	1226	1510	1727	1920	2398					
49	400	531	622	652	792	950	1084	1213	1424	1724	1948	2251	2832					
	368	482	531	575	700	821	941	1049	1152	1419	1623	1804	2253					
50	389	515	603	632	768	920	1050	1174	1377	1668	1884	2174	2735					
	347	453	499	541	659	772	885	987	1084	1335	1527	1697	2120					
51	378	500	584	613	744	891	1016	1137	1332	1614	1823	2101	2643	2910				
	327	427	470	509	620	727	834	930	1021	1258	1438	1598	1997	2213				
52	368	486	566	594	722	863	985	1101	1290	1562	1765	2031	2556	2814				
	308	402	443	480	585	686	786	877	963	1186	1356	1507	1883	2087				
53	358	472	549	576	700	836	954	1067	1249	1513	1709	1965	2472	2722				
	291	380	419	454	552	647	742	828	909	1120	1280	1423	1778	1970				
54	348	458	533	559	679	811	925	1035	1210	1465	1656	1901	2392	2634				
	275	359	396	429	522	612	702	782	859	1058	1210	1345	1680	1862				
55	339	446	518	543	659	786	897	1004	1172	1420	1605	1841	2316	2550	2901			
	260	340	374	406	494	579	664	740	813	1001	1145	1272	1590	1762	2001			
56	330	433	503	527	640	763	870	974	1137	1377	1556	1783	2243	2470	2797			
	246	322	355	384	468	548	629	701	770	948	1084	1205	1505	1668	1895			
57	322	421	488	512	622	740	845	945	1103	1336	1509	1728	2174	2394	2700	2940		
	233	305	336	364	444	520	596	664	730	899	1028	1142	1427	1582	1797	1962		
58	313	410	474	497	604	719	820	918	1070	1296	1465	1675	2107	2321	2607	2849		
	221	289	319	346	421	493	566	631	693	853	975	1084	1354	1501	1705	1862		
59	305	399	461	483	587	698	797	891	1038	1252	1422	1624	2044	2251	2519	2761		
	210	275	303	328	400	468	537	599	658	810	926	1029	1286	1425	1619	1768		
60	297	388	447	470	571	678	774	866	1008	1211	1381	1575	1980	2184	2435	2677	2914	
	200	261	288	312	380	445	511	569	625	770	880	979	1222	1355	1539	1681	1825	
61	290	378	433	457	555	659	752	842	980	1171	1341	1524	1915	2119	2355	2597	2819	
	190	249	274	297	361	424	486	542	595	732	837	931	1163	1289	1464	1599	1736	
62	283	368	419	445	540	641	731	818	952	1133	1303	1475	1853	2058	2279	2521	2728	
	181	237	261	283	344	403	462	516	566	697	797	886	1107	1227	1394	1523	1653	
63	276	358	406	433	526	623	711	796	925	1097	1267	1428	1795	1999	2207	2447	2642	
	173	226	249	269	328	384	441	491	540	664	760	845	1055	1169	1328	1451	1575	
64	269	349	394	421	512	606	692	774	900	1063	1230	1384	1739	1943	2138	2377	2560	
	165	215	237	257	313	366	420	469	515	634	724	805	1006	1115	1267	1383	1502	
65	262	340	382	410	498	590	673	753	875	1031	1192	1341	1685	1883	2073	2309	2481	2937
	157	205	226	245	298	350	401	447	491	605	691	769	960	1064	1209	1320	1434	1671
66	254	332	367	399	486	573	656	734	808	999	1156	1301	1634	1826	2010	2245	2406	2849
	150	196	216	234	285	334	383	427	469	577	660	734	917	1016	1154	1261	1369	1596
67	247	323	357	388	472	557	638	712	796	970	1122	1262	1586	1772	1950	2183	2334	2764
	144	188	207	224	273	320	367	408	455	552	631	701	876	971	1103	1205	1308	1525
68	241	315	347	378	459	542	620	691	784	941	1089	1225	1539	1720	1893	2123	2266	2683
	138	180	198	215	261	307	351	390	441	528	603	671	838	929	1055	1152	1251	1458
69	234	306	338	368	447	528	603	671	772	914	1057	1189	1495	1670	1838	2066	2200	2605
	132	173	190	207	251	295	336	373	428	505	577	642	802	889	1010	1103	1197	1396
70	228	298	329	358	435	514	587	652	761	888	1027	1155	1452	1622	1786	2011	2138	2531
	127	166	183	198	241	283	323	357	416	483	553	615	768	851	967	1056	1146	1336
71	222	291	321	349	424	500	571	633	751	863	998	1123	1411	1577	1736	1958	2078	2460
	122	160	176	190	231	271	309	342	404	463	530	589	736	815	926	1012	1098	1280
72	217	283	313	340	413	487	556	616	730	839	971	1092	1372	1533	1688	1907	2020	2391
	117	153	169	183	222	260	297	328	387	444	508	564	705	782	888	970	1053	1227
73	211	276	305	332	402	475	542	599	710	816	944	1062	1335	1491	1641	1858	1965	2326
	112	147	162	176	213	250	285	315	371	426	487	541	677	750	852	930	1010	1177
74	206	269	297	323	392	463	528	583	691	794	919	1033	1299	1451	1597	1811	1912	2263
	108	141	156	169	205	241	273	302	356	409	468	520	649	720	818	893	970	1130
75	201	263	290	315	382	451	515	567	673	773	894	1006	1264	1412	1555	1765	1861	2203
	104	136	150	163	197	231	263	290	342	393	449	499	624	691	785	858	931	1085
76	196	256	283	308	373	440	502	552	655	753	871	979	1231	1375	1514	1722	1812	2145
	100	131	144	157	189	223	252	279	329	377	431	480	599	664	754	824	895	1043
77	192	250	276	300	364	429	490	538	638	733	848	954	1199	1339	1475	1680	1765	2090
	97	126	139	151	182	214	243	268	316	363	415	461	576	638	725	792	860	1003
78	187	244	269	293	355	419	478	524	622	714	826	930	1168	1305	1437	1639	1720	2036
	93	122	134	145	176	207	233	258	304	349	399	443	554	614	698	762	827	964
79	183	239	262	286	346	409	466	511	606	696	806	906	1139	1272	1401	1600	1676	1985
	90	118	129	140	169	199	225	248	292	336	384	427	533	591	671	733	796	928
80	178	233	255	279	338	399	455	498	591	679	785	883	1110	1240	1366	1562	1635	1935
	86	113	124	135	163	192	216	239	282	323	370	411	513	569	646	706	767	893

ASD

STANDARD LOAD TABLE/OPEN WEB STEEL JOISTS, LH-SERIES
Based on a 50 ksi Maximum Yield Strength - Loads Shown In Pounds Per Linerar Foot (plf)

Joist Designation	44LH09	44LH10	44LH11	44LH12	44LH13	44LH14	44LH15	44LH16	44LH17	44LH18	44LH19	44LH20	44LH21	44LH22	44LH23	44LH24	44LH25
Depth (in.)	44	44	44	44	44	44	44	44	44	44	44	44	44	44	44	44	44
Approx. Wt. (lbs./ft.)	19	21	22	25	30	31	36	42	47	57	64	82	93	101	118	127	147
Span (ft.) ↓																	
44	585	645	760	897	1058	1260	1466	1730	1929	2388	2816						
	585	645	760	897	1058	1260	1466	1730	1929	2388	2816						
45	568	627	738	870	1026	1220	1420	1673	1866	2310	2718						
	568	627	738	870	1026	1220	1420	1673	1866	2310	2718						
46	552	609	716	844	995	1182	1375	1619	1806	2235	2625						
	552	609	716	844	995	1182	1375	1619	1806	2235	2625						
47	537	592	695	819	966	1146	1333	1567	1748	2164	2537						
	537	592	695	819	966	1146	1333	1567	1748	2164	2504						
48	522	576	674	795	938	1111	1292	1518	1693	2095	2452						
	522	576	674	795	938	1111	1292	1518	1661	2095	2350						
49	508	560	655	772	910	1077	1253	1470	1640	2030	2371	2985					
	508	560	652	772	910	1077	1253	1460	1561	1984	2208	2762					
50	494	545	636	750	884	1045	1215	1424	1589	1967	2294	2888					
	494	545	613	750	884	1028	1194	1374	1468	1867	2077	2598					
51	481	530	618	728	859	1013	1179	1381	1540	1907	2220	2796					
	481	530	578	713	845	968	1125	1294	1383	1758	1957	2447					
52	468	516	600	708	835	984	1145	1339	1493	1849	2150	2707	2980				
	458	504	545	672	797	913	1061	1220	1304	1658	1845	2308	2559				
53	455	502	583	688	811	955	1111	1299	1448	1793	2083	2622	2887				
	432	476	514	635	753	862	1002	1152	1231	1566	1742	2179	2416				
54	443	489	567	669	789	927	1079	1260	1406	1740	2018	2541	2798				
	409	450	486	600	711	815	947	1089	1164	1480	1646	2059	2283				
55	432	476	551	650	767	901	1048	1223	1364	1689	1956	2463	2712				
	387	426	460	568	673	771	896	1030	1101	1400	1558	1948	2160				
56	421	464	536	633	746	876	1019	1188	1325	1640	1897	2389	2630				
	366	403	436	538	637	730	848	976	1043	1326	1475	1845	2046				
57	410	452	522	616	726	851	990	1154	1287	1593	1841	2318	2552	2991			
	347	382	413	510	604	692	804	925	989	1257	1398	1749	1939	2203			
58	399	440	508	599	708	828	963	1121	1250	1548	1787	2249	2477	2889			
	329	363	392	484	573	657	763	878	938	1192	1327	1660	1840	2091			
59	389	429	494	583	688	805	937	1089	1215	1505	1735	2184	2405	2791	2970		
	313	344	372	459	544	624	725	834	891	1133	1260	1576	1748	1986	2171		
60	379	418	481	568	670	783	911	1059	1181	1463	1685	2121	2336	2698	2883		
	297	327	354	437	518	593	689	792	847	1077	1198	1498	1661	1887	2064		
61	370	408	469	553	652	762	887	1030	1149	1423	1637	2061	2270	2610	2799		
	283	312	337	415	492	564	655	754	806	1024	1140	1425	1580	1796	1963		
62	361	398	457	539	636	742	863	1002	1118	1384	1591	2003	2206	2526	2718		
	269	297	320	396	469	537	624	718	767	975	1085	1357	1505	1710	1869		
63	352	388	445	525	619	722	841	975	1088	1347	1547	1948	2145	2446	2641	2932	
	257	283	305	377	447	512	595	684	731	929	1034	1293	1434	1629	1781	1936	
64	343	379	434	512	604	704	819	949	1059	1311	1504	1894	2086	2370	2567	2840	
	245	270	291	359	426	488	567	652	697	886	986	1233	1367	1554	1699	1846	
65	335	370	423	499	589	685	798	924	1031	1277	1464	1843	2029	2297	2496	2753	
	234	257	278	343	407	466	541	622	665	846	941	1177	1305	1483	1621	1762	
66	327	361	411	487	574	668	777	900	1004	1244	1424	1794	1975	2228	2428	2670	
	223	246	265	328	388	445	517	594	635	807	898	1124	1246	1416	1548	1683	
67	319	352	399	475	560	651	758	877	978	1212	1387	1746	1923	2161	2363	2590	
	213	235	254	313	371	425	494	568	607	772	859	1074	1191	1353	1479	1608	
68	312	344	388	463	546	635	739	855	954	1181	1350	1700	1873	2098	2300	2514	2977
	204	225	243	299	355	406	472	543	581	738	821	1027	1139	1294	1415	1538	1793
69	304	336	377	452	533	619	721	833	930	1151	1315	1656	1824	2037	2239	2442	2891
	195	215	232	286	340	389	452	520	556	706	786	983	1090	1238	1354	1471	1716
70	297	328	366	441	521	604	703	813	906	1123	1279	1609	1778	1979	2181	2372	2809
	187	206	222	274	325	372	433	498	532	676	752	941	1043	1186	1296	1409	1643
71	291	321	356	431	508	589	686	792	884	1095	1243	1563	1733	1923	2125	2305	2730
	179	197	213	263	312	357	415	477	510	648	721	902	1000	1136	1242	1350	1574
72	284	313	347	421	496	575	670	773	863	1068	1209	1520	1689	1870	2070	2241	2654
	172	189	204	252	299	342	398	457	489	621	691	864	958	1089	1191	1294	1509
73	278	306	338	411	485	562	654	754	842	1043	1176	1479	1648	1819	2018	2180	2582
	165	181	196	242	287	328	381	439	469	596	663	829	919	1045	1142	1242	1448
74	272	300	325	402	477	549	639	737	790	1016	1144	1439	1607	1770	1968	2121	2512
	158	174	188	232	275	315	366	421	450	572	636	796	882	1003	1096	1192	1390
75	265	293	317	393	466	534	623	719	780	989	1113	1400	1565	1723	1920	2065	2445
	152	168	181	224	265	302	352	405	438	549	611	764	847	963	1053	1144	1335
76	259	286	310	383	454	520	608	701	769	963	1084	1364	1524	1678	1873	2011	2381
	146	162	175	215	254	291	339	390	426	528	587	734	814	925	1012	1100	1282
77	253	279	302	374	444	506	593	684	759	938	1056	1328	1484	1634	1828	1959	2319
	141	155	168	207	246	279	326	375	415	507	564	706	783	889	973	1057	1233
78	247	272	295	365	433	493	579	668	750	914	1029	1294	1446	1592	1785	1908	2260
	136	150	162	200	236	268	314	362	405	488	543	679	753	856	935	1017	1186
79	242	266	289	356	423	481	565	652	732	891	1003	1262	1410	1552	1743	1860	2203
	131	144	157	192	228	259	303	348	390	469	522	654	725	823	900	978	1141
80	236	260	282	347	413	469	551	637	715	869	978	1230	1374	1513	1702	1814	2148
	127	139	151	185	220	249	292	336	376	452	503	629	698	793	867	942	1099
81	231	254	276	339	404	457	537	622	699	848	954	1200	1341	1476	1663	1769	2095
	122	134	146	179	212	240	281	324	363	435	484	606	672	764	835	907	1058
82	226	249	269	331	395	446	524	608	683	827	931	1171	1308	1440	1625	1726	2044
	118	130	140	172	205	231	271	313	351	420	467	584	648	736	805	875	1020
83	221	243	264	323	386	436	512	594	667	807	908	1142	1276	1405	1588	1684	1995
	114	125	136	166	198	223	261	302	338	404	450	563	624	709	776	843	983
84	216	238	258	315	377	425	500	580	652	788	887	1115	1246	1372	1553	1644	1947
	110	121	131	160	191	215	252	291	327	390	434	543	602	684	748	813	948
85	211	233	252	308	369	415	488	568	638	769	866	1089	1217	1340	1519	1606	1902
	106	117	127	155	185	207	243	282	316	376	419	524	581	660	722	785	915
86	207	228	247	300	361	406	476	555	624	751	846	1064	1189	1309	1485	1569	1858
	103	113	123	149	179	200	234	272	305	363	404	506	561	637	697	758	884
87	202	223	242	293	353	396	466	543	610	734	826	1039	1161	1279	1453	1533	1815
	99	110	119	144	173	193	227	263	295	351	391	489	542	616	673	732	853
88	198	218	236	287	346	387	455	531	597	718	808	1016	1135	1250	1422	1498	1774
	96	106	115	139	167	187	219	255	285	339	377	472	523	595	650	707	824

ASD

STANDARD LOAD TABLE/OPEN WEB STEEL JOISTS, LH-SERIES
Based on a 50 ksi Maximum Yield Strength - Loads Shown In Pounds Per Linerar Foot (plf)

Joist Designation	48LH10	48LH11	48LH12	48LH13	48LH14	48LH15	48LH16	48LH17	48LH18	48LH19	48LH20	48LH21	48LH22	48LH23	48LH24	48LH25
Depth (in.)	48	48	48	48	48	48	48	48	48	48	48	48	48	48	48	48
Approx. Wt. (lbs./ft.)	21	22	25	29	32	36	42	47	57	62	79	87	101	109	124	144
Span (ft.) ↓																
48	538	581	756	905	1102	1264	1495	1678	2141	2537						
	538	581	756	905	1102	1264	1495	1678	2141	2537						
49	525	566	736	880	1071	1229	1452	1629	2079	2458						
	525	566	736	880	1071	1229	1452	1629	2079	2458						
50	512	552	717	857	1041	1194	1409	1581	2019	2382						
	512	552	717	857	1041	1194	1409	1581	2019	2382						
51	499	538	698	835	1013	1161	1369	1536	1961	2310	2909					
	499	538	698	835	1013	1161	1369	1536	1961	2310	2909					
52	487	525	680	813	985	1129	1330	1492	1905	2240	2821					
	487	525	680	813	985	1129	1330	1492	1905	2217	2776					
53	475	512	662	792	958	1099	1292	1450	1851	2173	2737					
	475	512	662	792	958	1099	1292	1450	1851	2093	2621					
54	463	500	645	771	932	1069	1256	1409	1799	2109	2656	2925				
	463	500	645	771	932	1069	1251	1399	1776	1978	2477	2747				
55	452	488	628	751	907	1040	1221	1370	1749	2047	2579	2840				
	452	488	628	751	897	1027	1184	1324	1681	1872	2344	2599				
56	441	476	612	732	883	1013	1188	1333	1701	1988	2505	2758				
	441	476	603	720	849	973	1121	1254	1592	1773	2220	2461				
57	431	465	597	714	860	986	1155	1296	1655	1932	2433	2679				
	422	455	572	682	805	922	1063	1188	1509	1680	2104	2333				
58	420	454	582	696	837	960	1124	1261	1611	1877	2365	2604				
	400	432	542	648	764	875	1008	1128	1432	1595	1997	2214				
59	410	443	567	679	815	935	1094	1228	1568	1825	2299	2531	2989			
	380	410	515	615	726	831	958	1071	1360	1514	1896	2103	2390			
60	401	433	553	662	795	911	1065	1195	1526	1774	2235	2461	2906			
	362	390	490	585	690	790	910	1018	1293	1439	1803	1999	2272			
61	392	423	540	646	774	888	1037	1164	1486	1726	2174	2394	2827	2972		
	344	371	466	556	656	751	866	968	1230	1369	1715	1901	2161	2365		
62	382	413	527	630	755	866	1010	1134	1448	1679	2115	2329	2751	2890		
	327	353	444	530	625	715	825	922	1171	1304	1633	1810	2058	2252		
63	374	403	514	615	736	844	984	1105	1411	1634	2059	2267	2678	2810		
	312	336	423	505	595	682	786	879	1116	1242	1556	1725	1961	2146		
64	365	394	502	600	718	823	959	1077	1375	1591	2004	2207	2601	2734		
	298	321	403	481	568	650	749	838	1064	1185	1484	1645	1870	2046		
65	357	385	490	586	700	803	935	1050	1340	1549	1952	2150	2521	2661		
	284	306	385	459	542	620	715	800	1015	1131	1416	1570	1784	1953		
66	349	377	478	572	683	784	912	1024	1307	1509	1902	2094	2445	2590	2934	
	271	292	367	439	517	592	683	764	970	1080	1352	1499	1704	1865	2029	
67	341	368	467	559	667	765	889	998	1275	1471	1853	2040	2372	2522	2846	
	259	279	351	419	494	566	653	730	927	1032	1292	1433	1629	1782	1939	
68	334	360	456	546	651	747	868	974	1244	1433	1806	1989	2303	2457	2763	
	248	267	336	401	473	541	624	698	886	987	1236	1370	1557	1704	1854	
69	326	352	446	533	635	729	847	950	1214	1398	1761	1939	2236	2394	2683	
	237	256	321	384	453	518	597	668	848	944	1182	1311	1490	1631	1774	
70	319	344	436	521	621	712	826	928	1185	1363	1717	1891	2172	2333	2606	
	227	245	308	367	433	496	572	640	812	904	1132	1255	1427	1562	1699	
71	312	337	426	510	606	695	807	906	1157	1329	1675	1845	2111	2274	2533	3000
	218	235	295	352	415	475	548	613	778	866	1085	1203	1367	1496	1628	1899
72	305	330	416	498	592	679	788	884	1129	1297	1634	1800	2053	2218	2463	2917
	209	225	283	337	398	456	525	587	746	831	1040	1153	1311	1434	1560	1821

ASD

STANDARD LOAD TABLE/OPEN WEB STEEL JOISTS, LH-SERIES
Based on a 50 ksi Maximum Yield Strength - Loads Shown In Pounds Per Linerar Foot (plf)

Joist Designation	48LH10	48LH11	48LH12	48LH13	48LH14	48LH15	48LH16	48LH17	48LH18	48LH19	48LH20	48LH21	48LH22	48LH23	48LH24	48LH25
Depth (in.)	48	48	48	48	48	48	48	48	48	48	48	48	48	48	48	48
Approx. Wt. (lbs./ft.)	21	22	25	29	32	36	42	47	57	62	79	87	101	109	124	144
Span (ft.) ↓																
73	299	323	407	487	579	664	769	864	1103	1266	1595	1757	1997	2163	2396	2837
	200	216	271	324	382	437	504	564	715	797	998	1106	1257	1376	1497	1746
74	293	316	398	476	566	649	752	844	1078	1236	1557	1715	1943	2111	2331	2761
	192	207	260	311	367	420	484	541	687	765	958	1062	1207	1321	1437	1676
75	286	309	389	466	553	634	734	824	1053	1207	1520	1675	1891	2060	2269	2687
	184	199	250	298	352	403	464	519	659	734	920	1020	1159	1268	1380	1610
76	281	303	381	456	541	620	718	806	1029	1179	1485	1636	1841	2011	2209	2617
	177	191	240	287	338	387	446	499	634	706	884	980	1114	1219	1326	1547
77	275	297	373	446	529	607	702	788	1006	1151	1451	1598	1794	1964	2152	2549
	170	184	231	276	325	372	429	480	609	678	849	942	1071	1172	1275	1487
78	269	290	365	437	517	594	686	770	984	1125	1418	1561	1748	1918	2097	2484
	164	177	222	265	313	358	413	462	586	652	817	906	1030	1127	1226	1430
79	264	284	357	428	506	581	671	753	962	1100	1384	1526	1704	1874	2044	2421
	158	170	214	255	301	345	397	444	564	628	786	872	991	1084	1180	1376
80	258	279	350	419	495	568	656	737	941	1073	1350	1492	1661	1831	1993	2361
	152	164	206	246	290	332	382	428	543	604	757	839	954	1044	1136	1325
81	253	273	343	410	485	556	642	721	921	1046	1317	1459	1620	1790	1944	2302
	146	158	198	237	279	320	368	412	523	582	729	809	919	1006	1094	1277
82	246	266	336	402	475	545	629	706	901	1021	1284	1427	1581	1750	1897	2246
	141	152	191	228	269	308	355	397	504	561	703	779	886	969	1054	1230
83	241	260	329	393	464	533	615	690	882	996	1254	1396	1543	1711	1851	2192
	136	147	185	221	260	298	343	383	486	541	677	751	854	934	1017	1186
84	236	255	322	384	454	521	601	675	864	972	1224	1366	1506	1674	1807	2140
	132	142	179	213	251	287	331	371	468	522	653	725	824	901	981	1144
85	231	249	315	376	444	510	588	660	843	950	1195	1335	1471	1638	1765	2090
	127	137	173	206	243	278	320	358	452	504	631	699	795	870	946	1104
86	226	244	308	368	434	499	576	646	824	927	1167	1304	1436	1602	1724	2041
	123	133	167	199	234	269	310	346	436	486	609	675	767	840	913	1066
87	221	239	301	360	425	488	563	632	805	906	1140	1274	1403	1568	1684	1995
	119	129	161	193	227	260	299	335	421	469	588	652	741	811	882	1029
88	217	234	295	353	416	478	551	619	786	886	1115	1246	1372	1535	1646	1949
	116	125	156	187	220	252	289	324	407	454	568	630	716	783	852	994
89	212	229	289	345	407	468	540	606	769	866	1090	1218	1341	1503	1609	1906
	112	120	151	180	212	244	280	314	394	438	549	609	692	757	824	961
90	208	225	283	338	399	458	528	593	752	847	1065	1191	1311	1472	1573	1863
	108	117	147	175	206	236	271	304	381	424	531	589	669	732	797	929
91	204	220	277	332	390	448	518	581	735	828	1042	1164	1282	1442	1539	1822
	105	113	142	170	199	228	263	294	368	410	513	569	647	708	770	899
92	200	216	272	325	383	439	507	569	719	810	1019	1139	1254	1413	1505	1783
	102	110	138	164	193	221	255	285	356	397	497	551	626	685	745	870
93	196	212	266	318	375	430	497	558	704	793	998	1115	1228	1385	1473	1745
	99	106	133	159	187	214	247	276	345	384	481	533	606	663	722	842
94	192	208	261	312	367	422	487	547	689	776	976	1091	1201	1357	1442	1708
	96	103	129	154	181	208	239	268	334	372	466	516	587	642	699	815
95	188	204	256	306	360	413	477	536	674	759	956	1068	1176	1330	1411	1672
	93	100	126	150	176	201	232	260	323	360	451	500	568	622	677	790
96	185	200	251	300	353	405	468	525	660	744	936	1046	1152	1304	1382	1637
	90	97	122	145	171	195	225	252	313	349	437	485	551	603	656	765

ASD

METRIC LOAD TABLE/OPEN WEB STEEL JOISTS, LH-SERIES
Based on a 345 MPa Maximum Yield Strength - Loads Shown In Kilonewtons Per Meter (kN/m)

Joist Designation	18LH02	18LH03	18LH04	18LH05	18LH06	18LH07	18LH08	18LH09	18LH10	18LH11	18LH12	18LH13	18LH14	18LH15	18LH16	18LH17	18LH18	18LH19	18LH20
Depth (mm)	457	457	457	457	457	457	457	457	457	457	457	457	457	457	457	457	457	457	457
Approx. Wt. (kN/m)	0.15	0.16	0.18	0.21	0.22	0.25	0.28	0.31	0.34	0.37	0.42	0.49	0.54	0.58	0.65	0.74	0.85	0.92	1.24
Span (mm) ↓																			
5486	11.74	13.07	15.16	17.14	20.98	22.31	25.21	29.02	32.55	36.32	40.14								
	11.74	13.07	15.16	17.14	20.98	22.31	25.21	27.56	32.55	36.32	40.14								
5791	10.91	12.15	14.09	15.95	19.39	20.63	23.32	26.72	29.97	33.43	36.96								
	10.91	12.15	14.09	15.95	19.39	20.63	21.89	23.36	29.97	33.43	36.96								
6096	10.17	11.32	13.11	14.85	17.96	19.11	21.59	24.63	27.65	30.85	34.10	40.93							
	10.15	11.29	13.07	14.72	17.06	17.93	18.72	19.97	26.50	29.26	32.48	37.59							
6401	9.47	10.55	12.22	13.84	16.68	17.74	20.03	22.79	25.56	28.53	31.53	37.75	41.22						
	8.75	9.73	11.26	12.69	14.71	15.45	16.12	17.22	22.83	25.21	27.99	32.39	35.21						
6706	8.84	9.85	11.42	12.93	15.51	16.49	18.63	21.13	23.70	26.44	29.23	34.89	38.11	41.28					
	7.58	8.44	9.77	11.01	12.75	13.41	13.99	14.94	19.81	21.89	24.28	28.10	30.55	33.21					
7010	8.27	9.20	10.68	12.09	14.44	15.36	17.35	19.62	22.00	24.56	27.14	32.34	35.31	38.26					
	6.62	7.36	8.53	9.61	11.14	11.71	12.22	13.04	17.30	19.11	21.21	24.56	26.69	28.99					
7315	7.74	8.62	9.99	11.32	13.48	14.33	16.19	18.24	20.47	22.85	25.27	30.04	32.80	35.55	41.02				
	5.82	6.47	7.50	8.44	9.79	10.28	10.74	11.47	15.20	16.79	18.63	21.56	23.45	25.48	28.04				
7620	7.25	8.08	9.38	10.62	12.59	13.39	15.13	17.03	19.10	21.32	23.56	27.96	30.54	33.09	37.75	43.05			
	5.15	5.72	6.62	7.45	8.65	9.09	9.48	10.12	13.42	14.82	16.46	19.05	20.70	22.50	24.76	28.15			
7925	6.82	7.60	8.81	9.98	11.80	12.25	12.78	13.65	17.84	19.92	22.02	26.09	28.50	30.86	34.87	39.76			
	4.56	5.07	5.88	6.62	7.67	8.07	8.42	8.98	11.92	13.16	14.60	16.91	18.38	19.97	21.97	24.98			
8230	6.45	7.19	8.33	9.45	10.93	11.80	12.30	13.14	16.71	18.65	20.62	24.38	26.63	28.86	32.31	36.83	42.55		
	4.14	4.62	5.35	6.04	6.84	7.48	7.79	8.33	10.62	11.73	13.03	15.07	16.38	17.80	19.59	22.27	25.37		
8534	6.10	6.81	7.80	8.96	10.15	11.38	11.85	12.66	15.67	17.48	19.33	22.83	24.95	27.02	30.01	34.22	39.53		
	3.77	4.21	4.80	5.51	6.11	6.94	7.23	7.69	9.51	10.50	11.66	13.49	14.68	15.95	17.55	19.94	22.72		
8839	5.70	6.39	7.29	8.47	9.45	10.59	11.44	12.22	14.72	16.43	18.16	21.43	23.40	25.36	27.96	31.87	36.82	41.02	
	3.41	3.82	4.31	5.03	5.50	6.24	6.74	7.16	8.55	9.44	10.47	12.14	13.19	14.33	15.77	17.93	20.43	22.44	
9144	5.35	5.96	6.84	7.92	8.82	9.89	11.06	11.82	13.84	15.45	17.08	20.13	22.00	23.84	26.10	29.75	34.38	38.29	
	3.09	3.44	3.88	4.53	4.96	5.63	6.23	6.68	7.72	8.52	9.45	10.94	11.90	12.93	14.22	16.17	18.43	20.24	
9449	5.03	5.57	6.42	7.41	8.26	9.26	10.46	11.42	13.04	14.53	16.11	18.97	20.72	22.44	24.43	27.85	32.17	35.84	
	2.81	3.10	3.53	4.11	4.48	5.09	5.64	6.10	6.99	7.72	8.56	9.90	10.77	11.70	12.88	14.63	16.68	18.32	
9754	4.72	5.23	6.02	6.94	7.74	8.68	9.92	11.07	12.31	13.63	15.20	17.89	19.49	21.17	22.91	26.12	30.18	33.60	41.76
	2.55	2.83	3.19	3.73	4.08	4.62	5.12	5.54	6.34	7.00	7.77	9.00	9.79	10.63	11.70	13.29	15.14	16.65	20.46
10058	4.46	4.91	5.66	6.53	7.28	8.15	9.35	10.40	11.64	12.81	14.30	16.88	18.31	19.99	21.52	24.54	28.35	31.58	39.24
	2.33	2.58	2.91	3.40	3.70	4.20	4.67	5.04	5.77	6.37	7.07	8.20	8.91	9.69	10.66	12.11	13.80	15.16	18.63
10363	4.21	4.62	5.32	6.14	6.85	7.67	8.81	9.79	11.00	12.05	13.47	15.89	17.24	18.84	20.27	23.11	26.69	29.74	36.95
	2.14	2.34	2.65	3.09	3.38	3.85	4.26	4.61	5.28	5.82	6.46	7.48	8.14	8.84	9.73	11.06	12.60	13.84	17.03
10668	3.98	4.36	5.02	5.79	6.46	7.23	8.33	9.23	10.37	11.36	12.69	14.98	16.25	17.76	19.11	21.80	25.17	28.04	34.85
	1.97	2.15	2.43	2.84	3.09	3.51	3.89	4.21	4.83	5.34	5.92	6.85	7.45	8.09	8.91	10.14	11.54	12.68	15.58
10973	3.77	4.13	4.74	5.47	6.10	6.84	7.88	8.72	9.80	10.74	11.99	14.15	15.36	16.78	18.05	20.59	23.78	26.50	32.92
	1.80	1.98	2.23	2.61	2.84	3.23	3.59	3.88	4.43	4.90	5.44	6.30	6.84	7.44	8.18	9.31	10.60	11.64	14.31

ASD

METRIC LOAD TABLE/OPEN WEB STEEL JOISTS, LH-SERIES
Based on a 345 MPa Maximum Yield Strength - Loads Shown In Kilonewtons Per Meter (kN/m)

Joist Designation	20LH02	20LH03	20LH04	20LH05	20LH06	20LH07	20LH08	20LH09	20LH10	20LH11	20LH12	20LH13	20LH14	20LH15	20LH16	20LH17	20LH18	20LH19	20LH20
Depth (mm)	508	508	508	508	508	508	508	508	508	508	508	508	508	508	508	508	508	508	508
Approx. Wt. (kN/m)	0.15	0.16	0.18	0.20	0.22	0.25	0.28	0.31	0.34	0.36	0.41	0.50	0.54	0.58	0.66	0.80	0.89	1.01	1.27
Span (mm) ↓																			
6096	10.39	12.06	13.28	15.46	17.89	20.82	22.62	25.84	27.90	33.72	37.28								
	9.92	10.93	13.28	14.88	17.89	20.82	21.70	23.64	25.49	33.72	37.28								
6401	9.77	11.16	12.41	14.44	16.72	19.36	21.04	23.94	25.86	31.24	34.54	41.54							
	8.55	9.42	11.96	12.82	16.72	18.08	18.70	20.37	21.97	31.24	34.54	40.83							
6706	9.15	10.43	11.61	13.52	15.63	18.03	19.59	22.24	24.00	29.01	32.07	38.46	42.01						
	7.42	8.17	10.39	11.13	14.69	15.70	16.22	17.68	19.07	27.50	30.54	35.43	38.52						
7010	8.56	9.77	10.88	12.62	14.66	16.84	18.30	20.69	22.32	26.99	29.84	35.71	38.99	42.24					
	6.47	7.13	9.06	9.71	12.84	13.70	14.17	15.44	16.65	24.03	26.67	30.95	33.65	36.58					
7315	8.04	9.17	10.21	11.83	13.74	15.74	17.10	19.29	20.81	25.15	27.81	33.21	36.28	39.30					
	5.69	6.27	7.96	8.53	11.28	12.03	12.44	13.57	14.63	21.11	23.43	27.18	29.56	32.13					
7620	7.54	8.61	9.60	11.03	12.93	14.75	16.00	18.00	19.43	23.49	25.97	30.95	33.81	36.63	42.52				
	5.03	5.54	7.03	7.54	9.96	10.63	11.00	11.98	12.93	18.65	20.69	24.02	26.10	28.38	31.27				
7925	6.45	6.84	8.37	8.98	11.99	12.81	13.25	14.44	15.58	21.97	24.29	28.91	31.58	34.20	39.27				
	4.46	4.91	6.24	6.69	8.84	9.44	9.76	10.63	11.47	16.54	18.37	21.32	23.17	25.18	27.75				
8230	6.37	6.75	8.26	8.88	11.54	12.33	12.74	13.90	15.00	20.59	22.78	27.04	29.55	32.01	36.38	41.53			
	4.42	4.85	5.92	6.37	8.18	8.74	9.03	9.85	10.56	14.75	16.38	19.00	20.66	22.46	24.75	28.16			
8534	6.28	6.68	8.14	8.78	11.13	11.87	12.28	13.39	14.46	19.33	21.38	25.34	27.69	30.00	33.79	38.58			
	4.34	4.62	5.63	6.07	7.60	8.11	8.39	9.13	9.82	13.20	14.66	17.01	18.50	20.11	22.16	25.21			
8839	5.98	6.59	7.70	8.68	10.55	11.47	11.86	12.93	13.95	18.18	20.11	23.81	26.00	28.18	31.47	35.94	41.51		
	3.99	4.40	5.13	5.76	6.96	7.55	7.82	8.47	9.13	11.87	13.19	15.29	16.63	18.08	19.92	22.67	25.84		
9144	5.66	6.33	7.23	8.33	9.90	11.09	11.45	12.49	13.48	17.11	18.94	22.40	24.47	26.51	29.39	33.55	38.77	43.27	
	3.64	4.08	4.67	5.34	6.23	7.06	7.29	7.90	8.53	10.71	11.89	13.80	15.00	16.31	17.97	20.46	23.32	25.67	
9449	5.32	6.04	6.81	7.93	9.26	10.37	11.09	12.08	13.04	16.15	17.86	21.10	23.05	24.98	27.50	31.40	36.28	40.49	
	3.32	3.76	4.24	4.91	5.63	6.39	6.82	7.39	7.95	9.70	10.77	12.49	13.58	14.76	16.27	18.51	21.11	23.23	
9754	5.02	5.76	6.42	7.48	8.69	9.73	10.53	11.70	12.62	15.25	16.87	19.90	21.75	23.56	25.80	29.45	34.03	37.97	
	3.03	3.47	3.86	4.49	5.12	5.80	6.24	6.93	7.44	8.81	9.77	11.35	12.34	13.41	14.78	16.81	19.17	21.10	
10058	4.74	5.42	6.07	7.06	8.17	9.15	10.02	11.35	12.24	14.38	15.96	18.81	20.56	22.27	24.24	27.67	31.97	35.69	
	2.77	3.18	3.54	4.10	4.67	5.28	5.76	6.37	6.99	8.02	8.90	10.33	11.23	12.21	13.45	15.32	17.46	19.22	
10363	4.48	5.13	5.73	6.68	7.69	8.61	9.54	11.01	11.87	13.54	15.11	17.80	19.39	21.07	22.82	26.05	30.10	33.59	41.84
	2.53	2.91	3.25	3.76	4.26	4.83	5.32	5.82	6.53	7.32	8.14	9.44	10.27	11.16	12.30	13.99	15.95	17.55	21.64
10668	4.24	4.85	5.42	6.33	7.25	8.11	9.06	10.39	11.54	12.76	14.25	16.85	18.30	19.97	21.52	24.57	28.39	31.68	39.46
	2.33	2.68	2.99	3.47	3.89	4.42	4.90	5.34	5.99	6.71	7.45	8.65	9.39	10.21	11.26	12.81	14.60	16.08	19.81
10973	4.01	4.61	5.15	5.99	6.84	7.67	8.58	9.82	10.91	12.06	13.47	15.92	17.27	18.88	20.34	23.21	26.82	29.93	37.27
	2.14	2.46	2.75	3.19	3.59	4.05	4.50	4.90	5.50	6.15	6.84	7.93	8.63	9.38	10.34	11.76	13.41	14.76	18.19
11278	3.82	4.36	4.88	5.69	6.47	7.25	8.14	9.28	10.31	11.41	12.74	15.07	16.35	17.86	19.24	21.96	25.37	28.32	35.27
	1.98	2.27	2.53	2.94	3.29	3.73	4.15	4.50	5.04	5.67	6.30	7.31	7.95	8.63	9.51	10.82	12.34	13.58	16.75
11582	3.63	4.13	4.64	5.41	6.14	6.87	7.73	8.80	9.77	10.81	12.08	14.28	15.49	16.92	18.22	20.81	24.05	26.83	33.42
	1.83	2.08	2.34	2.72	3.05	3.44	3.82	4.15	4.67	5.23	5.80	6.74	7.32	7.96	8.78	9.99	11.39	12.53	15.45
11887	3.45	3.92	4.42	5.15	5.82	6.52	7.34	8.34	9.28	10.25	11.45	13.55	14.71	16.06	17.30	19.74	22.82	25.46	31.71
	1.70	1.94	2.17	2.52	2.80	3.18	3.53	3.85	4.31	4.83	5.37	6.23	6.77	7.36	8.11	9.23	10.53	11.58	14.28
12192	3.28	3.72	4.21	4.90	5.53	6.20	6.99	7.93	8.81	9.74	10.88	12.87	13.96	15.26	16.44	18.76	21.68	24.19	30.13
	1.57	1.79	2.02	2.34	2.59	2.94	3.28	3.56	3.99	4.48	4.97	5.76	6.27	6.81	7.51	8.55	9.74	10.72	13.22

ASD

METRIC LOAD TABLE/OPEN WEB STEEL JOISTS, LH-SERIES
Based on a 345 MPa Maximum Yield Strength - Loads Shown In Kilonewtons Per Meter (kN/m)

Joist Designation	24LH03	24LH04	24LH05	24LH06	24LH07	24LH08	24LH09	24LH10	24LH11	24LH12	24LH13	24LH14	24LH15	24LH16	24LH17	24LH18	24LH19	24LH20	24LH21
Depth (mm)	610	610	610	610	610	610	610	610	610	610	610	610	610	610	610	610	610	610	610
Approx. Wt. (kN/m)	0.16	0.18	0.19	0.23	0.25	0.26	0.31	0.34	0.36	0.39	0.47	0.51	0.55	0.61	0.72	0.83	0.90	1.15	1.28
Span (mm) ↓																			
7315	9.69	10.55	12.06	15.19	17.71	18.78	24.24	26.03	28.42	32.61	39.22	42.84							
	9.69	10.55	12.06	15.19	17.71	18.78	23.61	25.04	26.21	32.61	39.22	42.84							
7620	9.13	9.93	11.36	14.31	16.63	17.62	22.69	24.37	26.61	30.54	36.64	40.03	43.37						
	8.72	9.93	11.36	14.31	16.63	17.62	20.85	22.10	23.16	30.54	35.68	38.81	42.22						
7925	8.61	9.36	10.72	13.49	15.64	16.57	21.27	22.83	24.95	28.63	34.29	37.46	40.60						
	7.73	9.36	10.14	13.49	14.88	15.80	18.50	19.62	20.54	27.20	31.68	34.45	37.47						
8230	8.12	8.84	10.12	12.75	14.72	15.60	19.97	21.43	23.45	26.89	32.15	35.12	38.06						
	6.90	8.46	9.04	12.06	13.28	14.09	16.50	17.49	18.32	24.25	28.23	30.72	33.42						
8534	7.69	8.36	9.57	12.06	13.83	14.71	18.79	20.16	22.05	25.30	30.19	32.98	35.74	41.37					
	6.17	7.57	8.09	10.81	11.87	12.62	14.78	15.67	16.40	21.71	25.29	27.50	29.91	33.02					
8839	7.26	7.90	9.06	11.41	13.06	13.87	17.74	19.00	20.76	23.83	28.39	31.02	33.62	38.54					
	5.56	6.81	7.28	9.71	10.68	11.35	13.28	14.08	14.75	19.52	22.73	24.73	26.89	29.69					
9144	6.88	7.50	8.58	10.81	12.37	13.11	16.69	17.92	19.57	22.47	26.75	29.21	31.66	35.98	41.14				
	5.00	6.14	6.56	8.77	9.64	10.24	11.98	12.71	13.30	17.61	20.51	22.31	24.26	26.79	30.55				
9449	6.53	7.10	8.09	10.25	11.67	12.40	15.81	16.92	18.44	21.23	25.23	27.56	29.87	33.68	38.49				
	4.53	5.56	5.95	7.93	8.72	9.26	10.85	11.51	12.05	15.95	18.56	20.19	21.96	24.25	27.65				
9754	6.20	6.74	7.60	9.73	10.91	11.76	14.88	15.64	17.01	20.08	23.83	26.05	28.22	31.58	36.10	41.73			
	4.11	5.04	5.39	7.20	7.92	8.42	9.85	10.44	10.94	14.49	16.87	18.34	19.94	22.02	25.11	28.66			
10058	5.89	6.42	7.18	9.26	10.30	11.14	13.93	14.52	15.38	19.03	22.54	24.64	26.70	29.68	33.93	39.22			
	3.75	4.59	4.91	6.56	7.22	7.66	8.97	9.51	9.96	13.19	15.36	16.71	18.16	20.06	22.88	26.12			
10363	4.99	6.11	6.55	8.81	9.70	10.31	12.14	12.87	13.52	18.03	21.36	23.35	25.30	27.94	31.94	36.92	41.32		
	3.42	4.20	4.49	5.99	6.59	7.00	8.20	8.69	9.10	12.05	14.03	15.26	16.60	18.32	20.89	23.86	26.32		
10668	4.94	5.80	6.50	8.44	9.31	9.88	11.79	12.49	13.13	17.13	20.27	22.13	23.99	26.35	30.12	34.82	38.98		
	3.29	3.86	4.33	5.57	6.14	6.52	7.73	8.15	8.58	11.03	12.85	13.98	15.20	16.78	19.14	21.84	24.12		
10973	4.90	5.53	6.42	8.09	8.94	9.47	11.45	12.14	12.76	16.27	19.24	21.02	22.79	24.89	28.45	32.90	36.82		
	3.18	3.59	4.15	5.19	5.73	6.07	7.31	7.70	8.09	10.14	11.80	12.84	13.96	15.41	17.58	20.06	22.15		
11278	4.71	5.25	6.11	7.73	8.58	9.07	11.14	11.80	12.41	15.48	18.30	19.99	21.67	23.55	26.92	31.12	34.83	43.51	
	2.97	3.31	3.85	4.83	5.35	5.66	6.71	7.29	7.66	9.32	10.85	11.82	12.85	14.18	16.18	18.46	20.38	25.23	
11582	4.48	5.00	5.82	7.35	8.24	8.71	10.66	11.49	12.09	14.72	17.41	18.94	20.62	22.32	25.52	29.49	33.01	41.24	
	2.74	3.06	3.56	4.46	5.00	5.28	6.18	6.91	7.26	8.61	10.02	10.90	11.85	13.09	14.92	17.03	18.79	23.27	
11887	4.27	4.77	5.54	7.00	7.89	8.34	10.15	11.20	11.77	13.96	16.56	17.97	19.64	21.17	24.21	27.99	31.33	39.14	43.67
	2.55	2.84	3.29	4.14	4.67	4.93	5.73	6.40	6.88	7.95	9.26	10.06	10.96	12.09	13.79	15.74	17.38	21.51	23.80
12192	4.07	4.55	5.29	6.66	7.53	7.95	9.67	10.75	11.48	13.28	15.73	17.07	18.66	20.12	23.01	26.60	29.77	37.18	41.50
	2.36	2.65	3.06	3.83	4.33	4.58	5.29	5.92	6.55	7.36	8.58	9.32	10.14	11.20	12.78	14.57	16.09	19.92	22.03
12497	3.89	4.34	5.06	6.37	7.16	7.58	9.22	10.24	11.20	12.62	14.97	16.24	17.76	19.14	21.89	25.30	28.32	35.37	39.49
	2.21	2.46	2.86	3.57	4.02	4.26	4.91	5.51	6.10	6.82	7.95	8.65	9.41	10.39	11.86	13.52	14.94	18.49	20.46
12802	3.72	4.15	4.83	6.08	6.82	7.25	8.78	9.74	10.71	12.02	14.25	15.48	16.91	18.24	20.85	24.10	26.98	33.69	37.62
	2.05	2.30	2.65	3.32	3.75	3.96	4.56	5.12	5.66	6.34	7.39	8.05	8.75	9.66	11.01	12.57	13.89	17.19	19.01
13106	3.56	3.98	4.62	5.82	6.50	6.93	8.37	9.29	10.23	11.47	13.60	14.75	16.12	17.39	19.89	22.98	25.72	32.13	35.87
	1.92	2.15	2.49	3.07	3.48	3.70	4.26	4.75	5.26	5.92	6.88	7.50	8.15	9.00	10.27	11.71	12.93	16.00	17.71
13411	3.41	3.82	4.43	5.56	6.21	6.64	7.99	8.87	9.79	10.96	12.98	14.09	15.39	16.60	18.98	21.94	24.56	30.69	34.25
	1.80	2.01	2.33	2.87	3.25	3.47	3.96	4.43	4.91	5.51	6.42	6.99	7.60	8.39	9.57	10.93	12.06	14.92	16.52
13716	3.26	3.66	4.24	5.31	5.93	6.34	7.64	8.49	9.36	10.46	12.40	13.47	14.72	15.87	18.14	20.97	23.48	29.31	32.73
	1.69	1.89	2.18	2.68	3.03	3.23	3.70	4.15	4.59	5.15	6.01	6.53	7.10	7.85	8.94	10.21	11.26	13.95	15.44
14021	3.13	3.51	4.08	5.07	5.67	6.08	7.31	8.11	8.98	10.01	11.86	12.88	14.08	15.19	17.36	20.06	22.46	28.04	31.31
	1.59	1.78	2.05	2.51	2.84	3.03	3.47	3.88	4.29	4.83	5.61	6.11	6.65	7.34	8.37	9.55	10.55	13.06	14.44
14326	3.02	3.37	3.92	4.87	5.44	5.83	7.00	7.77	8.61	9.58	11.36	12.33	13.48	14.53	16.62	19.22	21.51	26.86	29.99
	1.48	1.66	1.92	2.34	2.65	2.86	3.25	3.63	4.02	4.52	5.26	5.73	6.23	6.87	7.85	8.96	9.88	12.22	13.52
14630	2.90	3.23	3.76	4.67	5.21	5.60	6.71	7.45	8.27	9.19	10.90	11.82	12.93	13.93	15.93	18.41	20.60	25.74	28.73
	1.40	1.56	1.80	2.21	2.49	2.68	3.05	3.41	3.77	4.24	4.94	5.37	5.85	6.45	7.35	8.40	9.28	11.48	12.69

ASD

METRIC LOAD TABLE/OPEN WEB STEEL JOISTS, LH-SERIES
Based on a 345 MPa Maximum Yield Strength - Loads Shown In Kilonewtons Per Meter (kN/m)

Joist Designation	28LH05	28LH06	28LH07	28LH08	28LH09	28LH10	28LH11	28LH12	28LH13	28LH14	28LH15	28LH16	28LH17	28LH18	28LH19	28LH20	28LH21	28LH22	28LH23
Depth (mm)	711	711	711	711	711	711	711	711	711	711	711	711	711	711	711	711	711	711	711
Approx. Wt. (kN/m)	0.19	0.23	0.25	0.26	0.31	0.34	0.36	0.39	0.44	0.51	0.55	0.61	0.72	0.82	0.92	1.15	1.28	1.49	1.62
Span (mm) ↓																			
8534	9.13	12.12	14.12	15.11	19.58	20.98	22.91	26.83	29.68	35.88	38.89								
	9.13	12.12	14.12	15.11	19.58	20.98	22.91	26.83	28.37	35.88	38.89								
8839	8.69	11.54	13.42	14.34	18.54	19.87	21.70	25.40	28.04	33.91	36.74	43.22							
	8.69	11.54	13.42	14.34	18.54	19.87	21.70	24.43	25.49	33.91	36.74	41.43							
9144	8.28	11.01	12.75	13.63	17.57	18.84	20.56	24.09	26.53	32.09	34.77	40.83							
	8.28	11.01	12.75	13.63	17.30	18.84	20.13	22.03	22.99	31.08	33.81	37.37							
9449	7.90	10.50	12.12	12.97	16.68	17.87	19.51	22.85	25.13	30.39	32.93	38.63							
	7.90	10.50	11.93	12.74	15.67	17.06	18.22	19.94	20.82	28.13	30.61	33.84							
9754	7.54	10.02	11.54	12.34	15.83	16.97	18.53	21.71	23.83	28.82	31.23	36.58	42.14						
	7.28	9.60	10.84	11.57	14.22	15.49	16.54	18.12	18.91	25.55	27.80	30.73	35.11						
10058	7.20	9.57	10.98	11.76	15.06	16.14	17.61	20.63	22.62	27.36	29.65	34.68	39.95						
	6.62	8.75	9.88	10.53	12.95	14.11	15.07	16.50	17.23	23.27	25.32	27.99	31.98						
10363	6.88	9.15	10.47	11.20	14.33	15.35	16.76	19.64	21.51	26.00	28.18	32.93	37.82	42.84					
	6.05	7.99	9.01	9.63	11.83	12.88	13.77	15.07	15.74	21.26	23.13	25.56	29.21	33.36					
10668	6.58	8.75	9.99	10.69	13.64	14.62	15.96	18.70	20.46	24.73	26.80	31.18	35.68	40.73					
	5.54	7.32	8.26	8.81	10.84	11.80	12.62	13.80	14.41	19.48	21.19	23.42	26.76	30.55					
10973	6.30	8.37	9.54	10.21	13.01	13.95	15.22	17.84	19.48	23.55	25.53	29.45	33.71	38.74	43.70				
	5.09	6.72	7.58	8.09	9.95	10.84	11.58	12.68	13.23	17.89	19.45	21.51	24.57	28.06	31.04				
11278	6.04	8.02	9.12	9.76	12.41	13.30	14.53	17.01	18.56	22.46	24.34	27.87	31.90	36.87	41.34				
	4.68	6.18	6.97	7.45	9.16	9.98	10.66	11.67	12.18	16.46	17.90	19.78	22.62	25.83	28.57				
11582	5.77	7.69	8.72	9.34	11.86	12.71	13.87	16.24	17.71	21.42	23.21	26.41	30.22	34.95	39.18				
	4.31	5.70	6.43	6.87	8.44	9.20	9.83	10.77	11.23	15.17	16.52	18.25	20.85	23.81	26.35				
11887	5.54	7.36	8.36	8.93	11.33	12.15	13.26	15.54	16.92	20.46	22.18	25.05	28.67	33.17	37.18				
	3.99	5.28	5.95	6.34	7.82	8.50	9.09	9.95	10.39	14.03	15.26	16.88	19.27	22.02	24.37				
12192	5.32	7.07	8.01	8.56	10.84	11.63	12.69	14.87	16.17	19.55	21.20	23.81	27.24	31.50	35.33				
	3.70	4.88	5.51	5.88	7.23	7.88	8.42	9.22	9.61	13.00	14.14	15.63	17.86	20.40	22.56				
12497	5.10	6.80	7.67	8.20	10.33	11.13	12.15	14.24	15.46	18.70	20.28	22.66	25.93	29.99	33.60	42.08			
	3.44	4.53	5.12	5.45	6.71	7.31	7.82	8.55	8.93	12.06	13.11	14.50	16.57	18.92	20.94	26.00			
12802	4.91	6.53	7.36	7.88	9.73	10.63	11.38	12.50	13.06	17.92	19.42	21.58	24.69	28.56	32.01	40.08			
	3.19	4.21	4.75	5.07	6.24	6.80	7.26	7.95	8.30	11.22	12.20	13.48	15.41	17.60	19.46	24.18			
13106	4.71	6.26	7.06	7.54	9.32	10.27	11.12	12.21	12.75	17.17	18.60	20.57	23.55	27.23	30.53	38.23	42.68		
	2.99	3.94	4.45	4.74	5.83	6.40	6.93	7.58	7.92	10.44	11.36	12.56	14.34	16.38	18.14	22.51	24.92		
13411	4.52	6.01	6.77	7.23	8.93	9.90	10.74	11.93	12.46	16.47	17.84	19.64	22.48	26.00	29.15	36.49	40.76		
	2.80	3.69	4.15	4.45	5.47	6.04	6.53	7.23	7.55	9.74	10.59	11.71	13.38	15.29	16.91	21.00	23.24		
13716	4.33	5.76	6.49	6.93	8.55	9.50	10.37	11.67	12.18	15.80	17.13	18.78	21.49	24.85	27.85	34.87	38.95	42.84	
	2.62	3.47	3.89	4.15	5.12	5.66	6.17	6.94	7.22	9.10	9.90	10.94	12.50	14.28	15.80	19.62	21.73	24.63	
14021	4.17	5.53	6.23	6.65	8.21	9.12	9.95	11.41	11.90	15.17	16.46	17.96	20.56	23.77	26.66	33.37	37.25	40.97	
	2.46	3.25	3.66	3.91	4.80	5.31	5.79	6.62	6.88	8.52	9.26	10.24	11.70	13.36	14.78	18.35	20.32	23.04	
14326	4.01	5.31	5.98	6.39	7.88	8.75	9.55	11.17	11.66	14.57	15.81	17.20	19.68	22.76	25.52	31.96	35.68	39.24	
	2.32	3.05	3.44	3.67	4.50	4.99	5.44	6.34	6.59	7.98	8.68	9.60	10.96	12.52	13.86	17.20	19.04	21.59	
14630	3.86	5.10	5.74	6.12	7.57	8.40	9.17	10.75	11.41	13.98	15.22	16.49	18.86	21.81	24.45	30.63	34.20	37.62	43.05
	2.18	2.87	3.23	3.44	4.24	4.69	5.12	5.95	6.31	7.48	8.14	9.00	10.28	11.74	13.00	16.14	17.87	20.27	22.03
14935	3.72	4.91	5.53	5.88	7.28	8.08	8.82	10.34	11.17	13.41	14.65	15.81	18.09	20.92	23.46	29.39	32.80	36.09	41.38
	2.07	2.71	3.05	3.23	3.99	4.42	4.83	5.58	6.05	7.03	7.66	8.46	9.67	11.04	12.21	15.17	16.79	19.04	20.70
15240	3.57	4.72	5.32	5.64	7.01	7.77	8.49	9.95	10.96	12.87	14.06	15.19	17.38	20.09	22.53	28.21	31.50	34.64	39.79
	1.94	2.55	2.87	3.05	3.76	4.15	4.55	5.26	5.77	6.62	7.19	7.96	9.09	10.39	11.49	14.27	15.80	17.92	19.48
15545	3.45	4.56	5.13	5.41	6.75	7.48	8.18	9.57	10.53	12.37	13.51	14.59	16.69	19.30	21.65	27.11	30.26	33.28	38.30
	1.83	2.42	2.71	2.86	3.54	3.92	4.29	4.96	5.44	6.23	6.78	7.50	8.56	9.77	10.82	13.44	14.88	16.87	18.34
15850	3.32	4.39	4.94	5.21	6.50	7.22	7.88	9.22	10.12	11.89	13.00	14.03	16.06	18.57	20.82	26.06	29.11	32.01	36.90
	1.73	2.27	2.56	2.69	3.32	3.72	4.05	4.68	5.13	5.88	6.39	7.07	8.08	9.22	10.21	12.68	14.03	15.90	17.30
16154	3.21	4.24	4.77	5.02	6.27	6.96	7.60	8.88	9.74	11.44	12.50	13.49	15.45	17.87	20.03	25.08	28.02	30.80	35.56
	1.64	2.15	2.42	2.55	3.15	3.51	3.83	4.42	4.84	5.54	6.04	6.66	7.63	8.71	9.63	11.96	13.25	15.01	16.33
16459	3.10	4.10	4.61	4.83	6.05	6.71	7.32	8.56	9.38	11.01	12.05	13.00	14.88	17.22	19.29	24.16	26.98	29.66	34.31
	1.56	2.04	2.30	2.40	2.97	3.32	3.63	4.15	4.58	5.23	5.70	6.30	7.20	8.23	9.10	11.31	12.52	14.19	15.44
16764	3.00	3.95	4.45	4.65	5.85	6.47	7.07	8.26	9.04	10.62	11.61	12.53	14.34	16.59	18.60	23.29	26.00	28.60	33.11
	1.48	1.94	2.18	2.27	2.81	3.13	3.44	3.94	4.33	4.96	5.39	5.96	6.81	7.79	8.62	10.69	11.85	13.44	14.60
17069	2.90	3.82	4.30	4.49	5.64	6.26	6.82	7.96	8.72	10.24	11.19	12.08	13.83	15.99	17.93	22.46	25.07	27.58	31.97
	1.41	1.83	2.07	2.15	2.67	2.97	3.25	3.73	4.10	4.69	5.10	5.64	6.46	7.36	8.15	10.14	11.22	12.72	13.83

ASD

METRIC LOAD TABLE/OPEN WEB STEEL JOISTS, LH-SERIES
Based on a 345 MPa Maximum Yield Strength - Loads Shown In Kilonewtons Per Meter (kN/m)

Joist Designation	32LH06	32LH07	32LH08	32LH09	32LH10	32LH11	32LH12	32LH13	32LH14	32LH15	32LH16	32LH17	32LH18	32LH19	32LH20	32LH21	32LH22	32LH23	32LH24
Depth (mm)	813	813	813	813	813	813	813	813	813	813	813	813	813	813	813	813	813	813	813
Approx. Wt. (kN/m)	0.20	0.23	0.25	0.31	0.31	0.35	0.39	0.44	0.48	0.51	0.61	0.72	0.82	0.90	1.14	1.27	1.47	1.61	1.81
Span (mm) ↓																			
9754	9.55	10.72	12.09	16.03	17.27	18.91	22.21	26.10	27.96	29.91	39.27								
	9.55	10.72	12.09	16.03	17.27	18.91	22.21	26.10	27.96	29.91	39.27								
10058	9.17	10.28	11.57	15.30	16.50	18.06	21.20	24.88	26.66	28.51	37.37	43.06							
	9.17	10.28	11.57	15.30	16.50	18.06	21.20	24.88	26.66	27.29	37.25	42.61							
10363	8.82	9.89	11.09	14.63	15.76	17.26	20.25	23.74	25.42	27.20	35.60	41.03							
	8.82	9.89	11.09	14.63	15.76	17.26	20.25	23.42	24.12	24.92	34.03	38.93							
10668	8.47	9.50	10.62	13.99	15.07	16.50	19.38	22.66	24.26	25.96	33.94	39.12							
	8.47	9.50	10.62	13.68	15.07	16.50	19.30	21.45	22.09	22.82	31.17	35.65							
10973	8.15	9.13	10.18	13.38	14.43	15.79	18.54	21.65	23.18	24.80	32.39	37.33	42.17						
	8.15	9.13	10.05	12.56	13.86	15.17	17.73	19.70	20.30	20.97	28.61	32.74	37.40						
11278	7.83	8.78	9.77	12.81	13.82	15.11	17.76	20.70	22.16	23.72	30.93	35.65	40.27						
	7.64	8.52	9.25	11.57	12.76	13.96	16.31	18.14	18.68	19.29	26.34	30.13	34.42						
11582	7.54	8.46	9.38	12.28	13.23	14.49	17.01	19.81	21.21	22.69	29.56	34.07	38.49						
	7.06	7.86	8.53	10.66	11.77	12.88	15.06	16.72	17.23	17.80	24.29	27.80	31.75						
11887	7.26	8.14	9.00	11.77	12.69	13.89	16.31	18.97	20.31	21.74	28.28	32.60	36.83	42.17					
	6.52	7.26	7.88	9.86	10.88	11.90	13.92	15.46	15.92	16.44	22.46	25.69	29.36	32.54					
12192	6.99	7.85	8.65	11.29	12.17	13.32	15.65	18.18	19.46	20.82	27.08	31.21	35.25	40.32					
	6.04	6.72	7.31	9.13	10.08	11.03	12.88	14.31	14.75	15.23	20.81	23.80	27.18	30.15					
12497	6.74	7.55	8.31	10.84	11.68	12.79	15.03	17.43	18.66	19.97	25.94	29.90	33.78	38.58					
	5.60	6.24	6.78	8.47	9.35	10.23	11.96	13.29	13.68	14.14	19.30	22.08	25.23	27.97					
12802	6.49	7.28	8.01	10.42	11.23	12.28	14.43	16.72	17.92	19.17	24.88	28.54	32.39	36.95					
	5.21	5.80	6.30	7.88	8.69	9.51	11.12	12.36	12.72	13.14	17.95	20.53	23.46	26.00					
13106	6.27	7.03	7.70	10.02	10.79	11.82	13.87	16.06	17.20	18.41	23.77	27.21	31.08	35.34					
	4.85	5.41	5.86	7.34	8.09	8.85	10.36	11.51	11.85	12.24	16.72	19.11	21.84	24.22					
13411	6.04	6.78	7.42	9.63	10.39	11.36	13.35	15.44	16.53	17.68	22.69	25.99	29.85	33.74	42.32				
	4.52	5.04	5.47	6.84	7.55	8.27	9.66	10.74	11.06	11.42	15.60	17.83	20.38	22.59	28.12				
13716	5.83	6.55	7.15	9.28	9.99	10.94	12.84	14.84	15.89	17.01	21.68	24.83	28.69	32.25	40.43				
	4.23	4.71	5.12	6.40	7.06	7.72	9.03	10.02	10.33	10.66	14.56	16.66	19.04	21.11	26.28				
14021	5.63	6.31	6.90	8.93	9.63	10.53	12.37	14.28	15.29	16.37	20.75	23.75	27.48	30.85	38.68	43.21			
	3.95	4.40	4.78	5.98	6.61	7.22	8.44	9.38	9.67	9.98	13.63	15.60	17.81	19.76	24.59	27.23			
14326	5.44	6.11	6.65	8.61	9.28	10.15	11.92	13.76	14.72	15.76	19.86	22.75	26.31	29.55	37.05	41.37			
	3.70	4.13	4.48	5.61	6.18	6.77	7.90	8.80	9.06	9.35	12.76	14.60	16.69	18.50	23.04	25.52			
14630	5.26	5.91	6.42	8.26	8.94	9.79	11.49	13.25	14.18	15.17	19.04	21.80	25.23	28.31	35.50	39.66	43.63		
	3.48	3.88	4.20	5.26	5.80	6.36	7.42	8.26	8.50	8.78	11.98	13.71	15.67	17.36	21.62	23.94	27.17		
14935	5.09	5.70	6.20	7.93	8.62	9.44	11.09	12.76	13.67	14.63	18.27	20.92	24.19	27.17	34.06	38.04	41.86		
	3.26	3.64	3.95	4.94	5.45	5.96	6.97	7.74	7.98	8.24	11.26	12.88	14.72	16.31	20.31	22.50	25.53		
15240	4.93	5.53	5.99	7.53	8.33	9.12	10.71	11.92	12.30	12.69	17.54	20.08	23.23	26.07	32.70	36.52	40.19		
	3.07	3.42	3.72	4.65	5.13	5.61	6.56	7.29	7.51	7.76	10.59	12.12	13.84	15.35	19.11	21.17	24.02		
15545	4.75	5.34	5.79	7.26	8.02	8.78	10.39	11.68	12.05	12.44	16.85	19.30	22.32	25.05	31.43	35.09	38.63	43.56	
	2.90	3.25	3.53	4.40	4.84	5.29	6.24	7.00	7.22	7.45	9.98	11.41	13.04	14.46	18.00	19.93	22.62	24.64	
15850	4.59	5.15	5.58	7.00	7.74	8.46	10.04	11.45	11.82	12.21	16.21	18.56	21.46	24.10	30.22	33.75	37.14	41.98	
	2.75	3.07	3.34	4.15	4.59	5.00	5.92	6.72	6.94	7.18	9.41	10.77	12.30	13.64	16.97	18.79	21.33	23.24	
16154	4.43	4.97	5.38	6.75	7.47	8.17	9.69	11.25	11.60	11.98	15.60	17.86	20.66	23.18	29.08	32.48	35.74	40.49	42.62
	2.61	2.91	3.15	3.94	4.33	4.74	5.60	6.47	6.68	6.90	8.88	10.17	11.61	12.87	16.02	17.74	20.13	21.94	23.75
16459	4.29	4.80	5.21	6.52	7.22	7.89	9.35	10.82	11.38	11.74	15.01	17.20	19.90	22.34	28.02	31.28	34.42	39.09	41.05
	2.46	2.75	2.99	3.73	4.11	4.49	5.31	6.12	6.42	6.62	8.39	9.60	10.97	12.17	15.14	16.78	19.04	20.73	22.46
16764	4.14	4.64	5.03	6.30	6.97	7.61	9.03	10.43	11.17	11.54	14.47	16.57	19.17	21.52	26.99	30.15	33.17	37.75	39.56
	2.34	2.61	2.83	3.54	3.89	4.26	5.03	5.79	6.08	6.39	7.93	9.09	10.39	11.51	14.33	15.87	18.00	19.61	21.24
17069	4.01	4.49	4.85	6.10	6.74	7.36	8.72	10.06	10.77	11.32	13.96	15.99	18.49	20.76	26.03	29.08	31.98	36.47	38.14
	2.23	2.48	2.68	3.35	3.70	4.04	4.77	5.48	5.76	6.15	7.53	8.61	9.83	10.90	13.57	15.03	17.06	18.57	20.12
17374	3.88	4.34	4.69	5.89	6.49	7.12	8.43	9.71	10.40	11.13	13.47	15.42	17.84	20.03	25.13	28.06	30.88	35.25	36.82
	2.11	2.36	2.55	3.19	3.50	3.83	4.53	5.16	5.45	5.93	7.13	8.15	9.32	10.33	12.87	14.25	16.17	17.61	19.07
17678	3.75	4.20	4.55	5.70	6.27	6.90	8.15	9.38	10.04	10.94	13.00	14.90	17.23	19.35	24.25	27.10	29.81	34.10	35.55
	2.01	2.24	2.43	3.03	3.32	3.66	4.30	4.90	5.18	5.73	6.77	7.74	8.84	9.80	12.21	13.52	15.33	16.71	18.09
17983	3.63	4.07	4.40	5.53	6.07	6.68	7.89	9.06	9.70	10.58	12.56	14.38	16.65	18.69	23.43	26.18	28.80	33.01	34.35
	1.91	2.13	2.32	2.88	3.16	3.48	4.10	4.65	4.91	5.45	6.42	7.35	8.40	9.31	11.58	12.84	14.57	15.87	17.19
18288	3.53	3.95	4.27	5.35	5.86	6.46	7.64	8.75	9.38	10.23	12.15	13.92	16.09	18.06	22.66	25.30	27.84	31.96	33.20
	1.82	2.04	2.20	2.75	3.00	3.31	3.89	4.43	4.68	5.18	6.11	6.99	7.98	8.85	11.01	12.20	13.84	15.09	16.34
18593	3.41	3.82	4.14	5.19	5.67	6.26	7.41	8.47	9.07	9.89	11.74	13.45	15.57	17.48	21.92	24.48	26.94	30.96	32.12
	1.73	1.94	2.10	2.62	2.86	3.15	3.72	4.20	4.43	4.93	5.80	6.65	7.60	8.42	10.47	11.61	13.17	14.36	15.54
18898	3.31	3.70	4.01	5.03	5.48	6.07	7.18	8.20	8.78	9.57	11.36	13.03	15.07	16.91	21.21	23.70	26.06	30.01	31.08
	1.66	1.85	1.99	2.51	2.71	3.00	3.54	4.01	4.23	4.69	5.53	6.33	7.23	8.01	9.98	11.06	12.55	13.67	14.79
19202	3.21	3.60	3.89	4.88	5.31	5.88	6.96	7.93	8.50	9.26	11.01	12.60	14.59	16.38	20.54	22.94	25.24	29.10	30.10
	1.57	1.76	1.91	2.39	2.59	2.86	3.38	3.82	4.02	4.46	5.26	6.02	6.88	7.64	9.51	10.53	11.95	13.01	14.09
19507	3.12	3.50	3.77	4.74	5.15	5.69	6.75	7.69	8.23	8.98	10.66	12.21	14.14	15.87	19.90	22.22	24.45	28.22	29.15
	1.51	1.69	1.82	2.29	2.46	2.72	3.22	3.63	3.85	4.26	5.02	5.74	6.56	7.28	9.07	10.04	11.39	12.41	13.45

ASD

METRIC LOAD TABLE/OPEN WEB STEEL JOISTS, LH-SERIES
Based on a 345 MPa Maximum Yield Strength - Loads Shown In Kilonewtons Per Meter (kN/m)

Joist Designation	36LH07	36LH08	36LH09	36LH10	36LH11	36LH12	36LH13	36LH14	36LH15	36LH16	36LH17	36LH18	36LH19	36LH20	36LH21	36LH22	36LH23	36LH24	36LH25
Depth (mm)	914	914	914	914	914	914	914	914	914	914	914	914	914	914	914	914	914	914	914
Approx. Wt. (kN/m)	0.23	0.26	0.31	0.31	0.34	0.36	0.44	0.53	0.53	0.64	0.72	0.85	0.93	1.18	1.34	1.46	1.78	1.90	2.17
Span (mm) ↓																			
10973	8.49	9.74	12.41	14.68	15.52	18.57	22.37	24.64	26.67	34.16	39.38								
	8.49	9.74	12.41	14.68	15.52	18.57	22.37	24.64	26.67	34.16	39.38								
11278	8.20	9.39	11.96	14.11	14.91	17.86	21.46	23.65	25.59	32.73	37.73	42.62							
	8.20	9.39	11.96	14.11	14.91	17.86	21.46	23.65	25.59	32.73	37.73	42.62							
11582	7.92	9.04	11.38	13.55	14.34	17.17	20.60	22.70	24.57	31.37	36.17	40.86							
	7.92	9.04	11.38	13.55	14.34	17.17	20.60	22.70	24.57	31.21	35.74	40.84							
11887	7.66	8.72	11.12	13.04	13.80	16.52	19.80	21.80	23.59	30.10	34.70	39.21							
	7.66	8.72	11.12	13.04	13.80	16.52	19.80	21.80	23.23	28.85	33.04	37.75							
12192	7.41	8.40	10.72	12.55	13.28	15.90	19.03	20.95	22.67	28.89	33.31	37.63	43.57						
	7.41	8.40	10.72	12.24	13.28	15.87	18.60	20.44	21.52	26.72	30.60	34.96	38.83						
12497	7.16	8.11	10.36	12.09	12.78	15.30	18.30	20.15	21.80	27.75	32.00	36.14	41.78						
	7.16	8.07	10.27	11.35	12.36	14.72	17.26	18.97	19.97	24.79	28.39	32.45	36.03						
12802	6.93	7.83	9.99	11.64	12.31	14.75	17.60	19.39	20.98	26.67	30.76	34.74	40.10						
	6.84	7.50	9.55	10.56	11.48	13.68	16.05	17.64	18.56	23.05	26.40	30.18	33.49						
13106	6.71	7.55	9.64	11.22	11.87	14.21	16.94	18.66	20.19	25.65	29.58	33.42	38.49						
	6.37	6.99	8.90	9.83	10.69	12.75	14.95	16.43	17.29	21.46	24.59	28.10	31.20						
13411	6.49	7.29	9.32	10.82	11.45	13.71	16.31	17.97	19.45	24.69	28.45	32.16	36.99						
	5.95	6.52	8.30	9.17	9.98	11.89	13.95	15.32	16.14	20.02	22.94	26.21	29.10						
13716	6.28	7.06	9.01	10.44	11.04	13.23	15.73	17.32	18.75	23.77	27.40	30.96	35.56						
	5.56	6.08	7.76	8.56	9.32	11.12	13.03	14.31	15.07	18.70	21.42	24.48	27.18						
14021	6.08	6.81	8.71	10.08	10.66	12.76	15.16	16.71	18.08	22.89	26.40	29.82	34.22	43.03					
	5.19	5.70	7.25	8.02	8.72	10.40	12.20	13.39	14.11	17.51	20.05	22.91	25.45	31.72					
14326	5.89	6.59	8.43	9.73	10.30	12.33	14.62	16.11	17.43	22.06	25.45	28.74	32.95	41.43					
	4.87	5.34	6.80	7.51	8.17	9.74	11.42	12.55	13.22	16.40	18.78	21.48	23.84	29.74					
14630	5.72	6.37	8.15	9.41	9.95	11.90	14.11	15.55	16.82	21.29	24.54	27.72	31.74	39.91					
	4.56	5.02	6.37	7.04	7.67	9.15	10.72	11.77	12.40	15.39	17.62	20.15	22.37	27.90					
14935	5.54	6.17	7.89	9.09	9.61	11.51	13.63	15.01	16.25	20.53	23.68	26.76	30.58	38.46	42.35				
	4.29	4.71	5.99	6.62	7.20	8.59	10.06	11.07	11.66	14.46	16.56	18.92	21.01	26.22	29.05				
15240	5.37	5.98	7.64	8.78	9.29	11.13	13.17	14.50	15.70	19.83	22.79	25.84	29.50	37.09	40.84				
	4.04	4.43	5.64	6.23	6.78	8.08	9.48	10.42	10.96	13.61	15.58	17.81	19.77	24.66	27.33				
15545	5.21	5.79	7.41	8.50	8.98	10.77	12.72	14.02	15.17	19.11	21.90	24.95	28.47	35.75	39.41				
	3.80	4.17	5.31	5.88	6.39	7.61	8.93	9.80	10.33	12.81	14.68	16.78	18.62	23.23	25.74				
15850	5.06	5.60	7.18	8.23	8.71	10.43	12.31	13.57	14.68	18.37	21.05	24.12	27.37	34.38	38.06	42.26			
	3.59	3.94	5.00	5.54	6.02	7.18	8.42	9.25	9.73	12.08	13.84	15.81	17.57	21.90	24.28	27.56			
16154	4.91	5.44	6.96	7.96	8.43	10.09	11.90	12.98	14.19	17.68	20.27	23.32	26.35	33.08	36.76	40.67			
	3.38	3.72	4.72	5.22	5.69	6.78	7.95	8.74	9.19	11.41	13.07	14.94	16.57	20.67	22.92	26.02			
16459	4.77	5.26	6.74	7.69	8.15	9.77	11.52	12.71	13.74	17.03	19.52	22.56	25.37	31.85	35.53	39.17	43.44		
	3.21	3.51	4.46	4.94	5.37	6.40	7.51	8.26	8.69	10.78	12.34	14.11	15.67	19.55	21.65	24.59	26.82		
16764	4.64	5.10	6.55	7.42	7.90	9.48	11.16	12.30	13.30	16.41	18.81	21.75	24.45	30.70	34.31	37.75	42.00		
	3.03	3.32	4.23	4.67	5.09	6.07	7.10	7.80	8.21	10.20	11.68	13.35	14.82	18.49	20.48	23.26	25.37		
17069	4.50	4.96	6.34	7.16	7.67	9.19	10.81	11.92	12.90	15.83	18.14	20.98	23.58	29.61	33.08	36.41	40.61	43.50	
	2.87	3.15	4.01	4.42	4.81	5.74	6.72	7.39	7.79	9.66	11.06	12.65	14.03	17.51	19.40	22.03	24.03	26.07	
17374	4.37	4.81	6.17	6.91	7.44	8.91	10.47	11.55	12.50	15.27	17.51	20.25	22.76	28.57	31.93	35.14	39.28	41.98	
	2.72	2.97	3.79	4.20	4.56	5.44	6.37	7.01	7.38	9.16	10.49	11.99	13.30	16.60	18.40	20.88	22.79	24.72	
17678	4.26	4.68	5.99	6.62	7.22	8.65	10.17	11.20	11.80	14.75	16.89	19.55	21.97	27.59	30.82	33.93	38.03	40.54	
	2.58	2.83	3.60	3.98	4.33	5.16	6.05	6.65	7.00	8.69	9.95	11.38	12.63	15.76	17.45	19.81	21.62	23.45	
17983	4.13	4.53	5.80	6.42	7.00	8.39	9.85	11.01	11.60	14.25	16.33	18.89	21.23	26.66	29.78	32.77	36.83	39.17	
	2.45	2.69	3.42	3.79	4.13	4.93	5.76	6.33	6.77	8.26	9.45	10.79	11.99	14.95	16.57	18.82	20.53	22.27	
18288	3.99	4.40	5.63	6.21	6.78	8.12	9.54	10.63	11.39	13.77	15.79	18.27	20.53	25.77	28.79	31.69	35.69	37.87	
	2.33	2.56	3.26	3.61	3.92	4.69	5.48	6.01	6.53	7.85	8.98	10.27	11.39	14.22	15.76	17.89	19.52	21.17	
18593	3.88	4.27	5.45	6.02	6.58	7.88	9.25	10.30	11.22	13.32	15.27	17.67	19.86	24.94	27.85	30.66	34.60	36.63	43.35
	2.23	2.45	3.12	3.44	3.75	4.48	5.23	5.72	6.33	7.47	8.55	9.77	10.84	13.52	14.98	17.01	18.57	20.13	23.46
18898	3.76	4.14	5.29	5.85	6.39	7.63	8.97	9.96	10.85	12.90	14.78	17.10	19.22	24.13	26.95	29.66	33.55	35.44	41.95
	2.13	2.33	2.97	3.28	3.59	4.26	4.99	5.44	6.02	7.10	8.14	9.31	10.33	12.88	14.27	16.21	17.68	19.17	22.34
19202	3.66	4.02	5.13	5.67	6.20	7.41	8.69	9.64	10.52	12.49	14.31	16.56	18.60	23.36	26.10	28.73	32.54	34.32	40.62
	2.04	2.23	2.84	3.13	3.41	4.07	4.77	5.19	5.74	6.77	7.74	8.85	9.83	12.27	13.60	15.44	16.85	18.27	21.27
19507	3.56	3.91	4.99	5.51	6.01	7.19	8.44	9.35	10.18	12.09	13.86	16.03	18.03	22.63	25.29	27.83	31.59	33.25	39.35
	1.95	2.13	2.71	3.00	3.26	3.89	4.55	4.94	5.47	6.46	7.39	8.44	9.38	11.70	12.97	14.72	16.06	17.42	20.30
19812	3.45	3.79	4.85	5.35	5.85	6.97	8.20	9.06	9.88	11.73	13.44	15.55	17.48	21.94	24.51	26.98	30.67	32.23	38.16
	1.86	2.04	2.61	2.87	3.12	3.72	4.34	4.71	5.22	6.15	7.06	8.07	8.96	11.17	12.37	14.05	15.33	16.62	19.36
20117	3.35	3.69	4.71	5.21	5.67	6.77	7.96	8.78	9.57	11.36	13.03	15.07	16.94	21.27	23.77	26.16	29.80	31.26	37.01
	1.78	1.95	2.49	2.74	2.99	3.54	4.15	4.50	4.99	5.88	6.74	7.70	8.55	10.66	11.82	13.42	14.63	15.87	18.50
20422	3.26	3.59	4.58	5.06	5.51	6.56	7.74	8.52	9.29	11.03	12.65	14.63	16.44	20.65	23.05	25.37	28.95	30.32	35.90
	1.70	1.86	2.37	2.62	2.86	3.38	3.98	4.30	4.77	5.61	6.43	7.35	8.17	10.20	11.29	12.82	13.99	15.17	17.67
20726	3.18	3.48	4.46	4.93	5.37	6.37	7.53	8.27	9.01	10.71	12.27	14.19	15.96	20.03	22.38	24.63	28.15	29.43	34.85
	1.63	1.79	2.29	2.52	2.74	3.23	3.82	4.13	4.55	5.38	6.15	7.03	7.82	9.74	10.79	12.27	13.38	14.50	16.89
21031	3.09	3.40	4.33	4.78	5.22	6.18	7.32	8.04	8.75	10.40	11.92	13.79	15.49	19.46	21.74	23.93	27.37	28.58	33.84
	1.56	1.72	2.18	2.40	2.62	3.10	3.66	3.94	4.36	5.15	5.89	6.74	7.48	9.32	10.33	11.73	12.79	13.89	16.18
21336	3.02	3.31	4.21	4.67	5.07	6.01	7.12	7.80	8.50	10.11	11.58	13.39	15.06	18.91	21.11	23.24	26.63	27.77	32.88
	1.50	1.64	2.10	2.32	2.52	2.97	3.50	3.77	4.17	4.93	5.64	6.45	7.16	8.93	9.89	11.23	12.25	13.29	15.48
21641	2.93	3.22	4.11	4.53	4.94	5.83	6.93	7.58	8.27	9.82	11.25	13.01	14.63	18.37	20.51	22.59	25.91	26.99	31.94
	1.44	1.59	2.01	2.21	2.42	2.84	3.37	3.60	3.99	4.71	5.39	6.17	6.85	8.56	9.48	10.77	11.74	12.74	14.84
21946	2.86	3.13	4.01	4.42	4.81	5.67	6.75	7.36	8.04	9.54	10.94	12.66	14.22	17.86	19.94	21.96	25.23	26.25	31.07
	1.38	1.51	1.94	2.13	2.32	2.72	3.23	3.45	3.83	4.52	5.18	5.92	6.58	8.20	9.09	10.31	11.26	12.21	14.22

ASD

METRIC LOAD TABLE/OPEN WEB STEEL JOISTS, LH-SERIES
Based on a 345 MPa Maximum Yield Strength - Loads Shown In Kilonewtons Per Meter (kN/m)

Joist Designation	40LH08	40LH09	40LH10	40LH11	40LH12	40LH13	40LH14	40LH15	40LH16	40LH17	40LH18	40LH19	40LH20	40LH21	40LH22	40LH23	40LH24	40LH25
Depth (mm)	1016	1016	1016	1016	1016	1016	1016	1016	1016	1016	1016	1016	1016	1016	1016	1016	1016	1016
Approx. Wt. (kN/m)	0.23	0.31	0.31	0.32	0.36	0.44	0.51	0.53	0.61	0.74	0.82	0.93	1.18	1.36	1.46	1.77	1.85	2.16
Span (mm) ↓																		
12192	7.57	10.28	12.24	12.82	15.58	18.92	21.59	24.15	28.64	34.68	39.18							
	7.57	10.28	12.24	12.82	15.58	18.92	21.59	24.15	28.64	34.68	39.18							
12497	7.35	9.95	11.82	12.40	15.06	18.25	20.82	23.30	27.59	33.42	37.73							
	7.35	9.95	11.82	12.40	15.06	18.25	20.82	23.30	27.59	33.42	37.73							
12802	7.15	9.63	11.42	11.98	14.55	17.61	20.09	22.47	26.59	32.19	36.36	42.49						
	7.15	9.63	11.42	11.98	14.55	17.61	20.09	22.47	26.59	32.19	36.36	41.94						
13106	6.93	9.34	11.04	11.58	14.06	17.00	19.39	21.70	25.62	31.04	35.06	40.89						
	6.93	9.34	11.04	11.58	14.06	17.00	19.39	21.70	25.62	30.73	35.06	39.06						
13411	6.74	9.04	10.68	11.19	13.60	16.41	18.73	20.95	24.72	29.94	33.82	39.37						
	6.74	9.04	10.68	11.19	13.60	16.41	18.73	20.95	24.72	28.67	32.77	36.44						
13716	6.53	8.77	10.33	10.82	13.16	15.86	18.09	20.24	23.86	28.89	32.63	37.92						
	6.53	8.77	10.01	10.82	13.16	15.48	17.76	19.80	21.74	26.79	30.63	34.04						
14021	6.34	8.49	9.99	10.47	12.74	15.32	17.48	19.55	23.02	27.88	31.50	36.55						
	6.34	8.49	9.36	10.15	12.36	14.49	16.62	18.53	20.34	25.07	28.66	31.85						
14326	6.17	8.23	9.67	10.14	12.33	14.81	16.91	18.91	22.24	26.94	30.44	35.25						
	6.10	7.96	8.78	9.51	11.58	13.58	15.57	17.36	19.07	23.49	26.85	29.85						
14630	5.99	7.98	9.36	9.82	11.93	14.33	16.35	18.30	21.49	26.03	29.40	34.01	42.80					
	5.72	7.47	8.24	8.93	10.87	12.74	14.60	16.28	17.89	22.03	25.20	28.02	34.99					
14935	5.83	7.74	9.07	9.51	11.55	13.86	15.81	17.70	20.78	25.15	28.42	32.85	41.32					
	5.37	7.03	7.74	8.39	10.21	11.98	13.73	15.30	16.81	20.70	23.68	26.32	32.88					
15240	5.67	7.51	8.80	9.22	11.20	13.42	15.32	17.13	20.09	24.34	27.49	31.72	39.91					
	5.06	6.61	7.28	7.89	9.61	11.26	12.91	14.40	15.81	19.48	22.28	24.76	30.93					
15545	5.51	7.29	8.52	8.94	10.85	13.00	14.82	16.59	19.43	23.55	26.60	30.66	38.57	42.46				
	4.77	6.23	6.85	7.42	9.04	10.60	12.17	13.57	14.90	18.35	20.98	23.32	29.14	32.29				
15850	5.37	7.09	8.26	8.66	10.53	12.59	14.37	16.06	18.82	22.79	25.75	29.64	37.30	41.06				
	4.49	5.86	6.46	7.00	8.53	10.01	11.47	12.79	14.05	17.30	19.78	21.99	27.48	30.45				
16154	5.22	6.88	8.01	8.40	10.21	12.20	13.92	15.57	18.22	22.08	24.94	28.67	36.07	39.72				
	4.24	5.54	6.11	6.62	8.05	9.44	10.82	12.08	13.26	16.34	18.68	20.76	25.94	28.74				
16459	5.07	6.68	7.77	8.15	9.90	11.83	13.49	15.10	17.65	21.38	24.16	27.74	34.90	38.44				
	4.01	5.23	5.77	6.26	7.61	8.93	10.24	11.41	12.53	15.44	17.65	19.62	24.51	27.17				
16764	4.94	6.50	7.55	7.92	9.61	11.47	13.09	14.65	17.10	20.72	23.42	26.86	33.79	37.21	42.33			
	3.79	4.96	5.45	5.92	7.20	8.44	9.69	10.79	11.86	14.60	16.71	18.56	23.20	25.71	29.20			
17069	4.81	6.31	7.34	7.69	9.34	11.13	12.69	14.21	16.59	20.09	22.70	26.02	32.73	36.04	40.81			
	3.59	4.69	5.18	5.60	6.82	7.99	9.17	10.23	11.23	13.83	15.81	17.58	21.96	24.34	27.65			
17374	4.69	6.14	7.12	7.47	9.07	10.79	12.33	13.79	16.09	19.49	22.02	25.21	31.72	34.93	39.40	42.90		
	3.40	4.45	4.90	5.31	6.47	7.58	8.69	9.69	10.65	13.11	15.00	16.66	20.82	23.08	26.22	28.63		
17678	4.56	5.98	6.91	7.25	8.81	10.49	11.96	13.39	15.61	18.91	21.38	24.44	30.74	33.87	38.04	41.57		
	3.22	4.21	4.65	5.04	6.14	7.19	8.26	9.20	10.11	12.44	14.22	15.81	19.76	21.90	24.88	27.17		
17983	4.45	5.82	6.72	7.04	8.56	10.18	11.63	13.00	15.14	18.27	20.75	23.70	29.82	32.85	36.76	40.29		
	3.06	4.01	4.42	4.78	5.83	6.82	7.83	8.74	9.60	11.82	13.51	15.01	18.76	20.79	23.62	25.80		
18288	4.33	5.66	6.52	6.85	8.33	9.89	11.29	12.63	14.71	17.67	20.15	22.98	28.89	31.87	35.53	39.06	42.52	
	2.91	3.80	4.20	4.55	5.54	6.49	7.45	8.30	9.12	11.23	12.84	14.28	17.83	19.77	22.46	24.53	26.63	
18593	4.23	5.51	6.31	6.66	8.09	9.61	10.97	12.28	14.30	17.08	19.57	22.24	27.94	30.92	34.36	37.90	41.14	
	2.77	3.63	3.99	4.33	5.26	6.18	7.09	7.90	8.68	10.68	12.21	13.58	16.97	18.81	21.36	23.33	25.33	
18898	4.13	5.37	6.11	6.49	7.88	9.35	10.66	11.93	13.89	16.53	19.01	21.52	27.04	30.03	33.25	36.79	39.81	
	2.64	3.45	3.80	4.13	5.02	5.88	6.74	7.53	8.26	10.17	11.63	12.93	16.15	17.90	20.34	22.22	24.12	
19202	4.02	5.22	5.92	6.31	7.67	9.09	10.37	11.61	13.49	16.00	18.49	20.84	26.19	29.17	32.20	35.71	38.55	
	2.52	3.29	3.63	3.92	4.78	5.60	6.43	7.16	7.88	9.69	11.09	12.33	15.39	17.06	19.38	21.17	22.98	
19507	3.92	5.09	5.74	6.14	7.47	8.84	10.09	11.29	13.13	15.51	17.95	20.19	25.37	28.35	31.20	34.68	37.36	
	2.40	3.13	3.45	3.75	4.56	5.34	6.12	6.84	7.51	9.25	10.56	11.74	14.68	16.27	18.49	20.18	21.92	
19812	3.82	4.96	5.57	5.98	7.26	8.61	9.82	10.98	12.76	15.04	17.39	19.57	24.59	27.48	30.25	33.69	36.20	42.86
	2.29	2.99	3.29	3.57	4.34	5.10	5.85	6.52	7.16	8.82	10.08	11.22	14.01	15.52	17.64	19.26	20.92	24.38
20117	3.70	4.84	5.35	5.82	7.09	8.36	9.57	10.71	11.79	14.57	16.87	18.98	23.84	26.64	29.33	32.76	35.11	41.57
	2.18	2.86	3.15	3.41	4.15	4.87	5.58	6.23	6.84	8.42	9.63	10.71	13.38	14.82	16.84	18.40	19.97	23.29
20422	3.60	4.71	5.21	5.66	6.88	8.12	9.31	10.39	11.61	14.15	16.37	18.41	23.14	25.86	28.45	31.85	34.06	40.33
	2.10	2.74	3.02	3.26	3.98	4.67	5.35	5.95	6.64	8.05	9.20	10.23	12.78	14.17	16.09	17.58	19.08	22.25
20726	3.51	4.59	5.06	5.51	6.69	7.90	9.04	10.08	11.44	13.73	15.89	17.87	22.46	25.10	27.62	30.98	33.06	39.15
	2.01	2.62	2.88	3.13	3.80	4.48	5.12	5.69	6.43	7.70	8.80	9.79	12.22	13.55	15.39	16.81	18.25	21.27
21031	3.41	4.46	4.93	5.37	6.52	7.70	8.80	9.79	11.26	13.33	15.42	17.35	21.81	24.37	26.82	30.15	32.10	38.01
	1.92	2.52	2.77	3.02	3.66	4.30	4.90	5.44	6.24	7.36	8.42	9.36	11.70	12.97	14.73	16.09	17.46	20.37
21336	3.32	4.34	4.80	5.22	6.34	7.50	8.56	9.51	11.10	12.95	14.98	16.85	21.19	23.67	26.06	29.34	31.20	36.93
	1.85	2.42	2.67	2.88	3.51	4.13	4.71	5.21	6.07	7.04	8.07	8.97	11.20	12.41	14.11	15.41	16.72	19.49
21641	3.23	4.24	4.68	5.09	6.18	7.29	8.33	9.23	10.96	12.59	14.56	16.38	20.59	23.01	25.33	28.57	30.32	35.90
	1.78	2.33	2.56	2.77	3.37	3.95	4.50	4.99	5.89	6.75	7.73	8.59	10.74	11.89	13.51	14.76	16.02	18.68
21946	3.16	4.13	4.56	4.96	6.02	7.10	8.11	8.98	10.65	12.24	14.17	15.93	20.02	22.37	24.63	27.83	29.47	34.89
	1.70	2.23	2.46	2.67	3.23	3.79	4.33	4.78	5.64	6.47	7.41	8.23	10.28	11.41	12.95	14.15	15.36	17.90
22250	3.07	4.02	4.45	4.84	5.86	6.93	7.90	8.74	10.36	11.90	13.77	15.49	19.48	21.75	23.94	27.11	28.67	33.94
	1.63	2.14	2.36	2.56	3.10	3.64	4.15	4.59	5.41	6.21	7.10	7.89	9.88	10.94	12.43	13.57	14.73	17.17
22555	3.00	3.92	4.33	4.71	5.72	6.75	7.70	8.50	10.08	11.58	13.41	15.07	18.95	21.17	23.30	26.42	27.90	33.02
	1.57	2.05	2.27	2.46	2.99	3.51	3.98	4.40	5.19	5.96	6.82	7.58	9.47	10.50	11.93	13.03	14.15	16.49
22860	2.93	3.83	4.23	4.59	5.57	6.58	7.51	8.27	9.82	11.28	13.04	14.68	18.44	20.60	22.69	25.75	27.15	32.15
	1.51	1.98	2.18	2.37	2.87	3.37	3.83	4.23	4.99	5.73	6.55	7.28	9.10	10.08	11.45	12.52	13.58	15.83
23165	2.86	3.73	4.13	4.49	5.44	6.42	7.32	8.05	9.55	10.98	12.71	14.28	17.96	20.06	22.09	25.13	26.44	31.30
	1.45	1.91	2.10	2.29	2.75	3.25	3.67	4.07	4.80	5.50	6.28	7.00	8.74	9.69	11.00	12.02	13.06	15.22
23470	2.80	3.64	4.02	4.37	5.31	6.26	7.15	7.85	9.31	10.69	12.37	13.92	17.49	19.54	21.52	24.51	25.75	30.50
	1.41	1.83	2.02	2.20	2.65	3.12	3.54	3.91	4.61	5.29	6.05	6.72	8.40	9.31	10.58	11.55	12.55	14.63
23774	2.72	3.56	3.92	4.27	5.18	6.11	6.97	7.64	9.07	10.42	12.05	13.57	17.04	19.04	20.97	23.91	25.10	29.71
	1.35	1.78	1.95	2.11	2.56	3.02	3.40	3.76	4.43	5.09	5.82	6.46	8.08	8.96	10.18	11.12	12.06	14.06
24079	2.67	3.48	3.82	4.17	5.04	5.96	6.80	7.45	8.84	10.15	11.76	13.22	16.62	18.56	20.44	23.35	24.45	28.96
	1.31	1.72	1.88	2.04	2.46	2.90	3.28	3.61	4.26	4.90	5.60	6.23	7.77	8.62	9.79	10.69	11.61	13.54
24384	2.59	3.40	3.72	4.07	4.93	5.82	6.64	7.26	8.62	9.90	11.45	12.88	16.19	18.09	19.93	22.79	23.86	28.23
	1.25	1.64	1.80	1.97	2.37	2.80	3.15	3.48	4.11	4.71	5.39	5.99	7.48	8.30	9.42	10.30	11.19	13.03

ASD

METRIC LOAD TABLE/OPEN WEB STEEL JOISTS, LH-SERIES
Based on a 345 MPa Maximum Yield Strength - Loads Shown In Kilonewtons Per Meter (kN/m)

Joist Designation	44LH09	44LH10	44LH11	44LH12	44LH13	44LH14	44LH15	44LH16	44LH17	44LH18	44LH19	44LH20	44LH21	44LH22	44LH23	44LH24	44LH25
Depth (mm)	1118	1118	1118	1118	1118	1118	1118	1118	1118	1118	1118	1118	1118	1118	1118	1118	1118
Approx. Wt. (kN/m)	0.28	0.31	0.32	0.36	0.44	0.45	0.53	0.61	0.69	0.83	0.93	1.20	1.36	1.47	1.72	1.85	2.15
Span (mm) ↓																	
13411	8.53	9.41	11.09	13.09	15.44	18.38	21.39	25.24	28.15	34.85	41.09						
	8.53	9.41	11.09	13.09	15.44	18.38	21.39	25.24	28.15	34.85	41.09						
13716	8.28	9.15	10.77	12.69	14.97	17.80	20.72	24.41	27.23	33.71	39.66						
	8.28	9.15	10.77	12.69	14.97	17.80	20.72	24.41	27.23	33.71	39.66						
14021	8.05	8.88	10.44	12.31	14.52	17.24	20.06	23.62	26.35	32.61	38.30						
	8.05	8.88	10.44	12.31	14.52	17.24	20.06	23.62	26.35	32.61	38.30						
14326	7.83	8.63	10.14	11.95	14.09	16.72	19.45	22.86	25.51	31.58	37.02						
	7.83	8.63	10.14	11.95	14.09	16.72	19.45	22.86	25.51	31.58	36.54						
14630	7.61	8.40	9.83	11.60	13.68	16.21	18.85	22.15	24.70	30.57	35.78						
	7.61	8.40	9.83	11.60	13.68	16.21	18.85	22.15	24.24	30.57	34.29						
14935	7.41	8.17	9.55	11.26	13.28	15.71	18.28	21.45	23.93	29.62	34.60	43.56					
	7.41	8.17	9.51	11.26	13.28	15.71	18.28	21.30	22.78	28.95	32.22	40.30					
15240	7.20	7.95	9.28	10.94	12.90	15.25	17.73	20.78	23.18	28.70	33.47	42.14					
	7.20	7.95	8.94	10.94	12.90	15.00	17.42	20.05	21.42	27.24	30.31	37.91					
15545	7.01	7.73	9.01	10.62	12.53	14.78	17.20	20.15	22.47	27.83	32.39	40.80					
	7.01	7.73	8.43	10.40	12.33	14.12	16.41	18.88	20.18	25.65	28.56	35.71					
15850	6.82	7.53	8.75	10.33	12.18	14.36	16.71	19.54	21.78	26.98	31.37	39.50	43.48				
	6.68	7.35	7.95	9.80	11.63	13.32	15.48	17.80	19.03	24.19	26.92	33.68	37.34				
16154	6.64	7.32	8.50	10.04	11.83	13.93	16.21	18.95	21.13	26.16	30.39	38.26	42.13				
	6.30	6.94	7.50	9.26	10.98	12.57	14.62	16.81	17.96	22.85	25.42	31.80	35.25				
16459	6.46	7.13	8.27	9.76	11.51	13.52	15.74	18.38	20.51	25.39	29.45	37.08	40.83				
	5.96	6.56	7.09	8.75	10.37	11.89	13.82	15.89	16.98	21.59	24.02	30.04	33.31				
16764	6.30	6.94	8.04	9.48	11.19	13.14	15.29	17.84	19.90	24.64	28.54	35.94	39.57				
	5.64	6.21	6.71	8.28	9.82	11.25	13.07	15.03	16.06	20.43	22.73	28.42	31.52				
17069	6.14	6.77	7.82	9.23	10.88	12.78	14.87	17.33	19.33	23.93	27.68	34.86	38.38				
	5.34	5.88	6.36	7.85	9.29	10.65	12.37	14.24	15.22	19.35	21.52	26.92	29.85				
17374	5.98	6.59	7.61	8.98	10.59	12.41	14.44	16.84	18.78	23.24	26.86	33.82	37.24	43.65			
	5.06	5.57	6.02	7.44	8.81	10.09	11.73	13.49	14.43	18.34	20.40	25.52	28.29	32.15			
17678	5.82	6.42	7.41	8.74	10.33	12.08	14.05	16.35	18.24	22.59	26.07	32.82	36.14	42.16			
	4.80	5.29	5.72	7.06	8.36	9.58	11.13	12.81	13.68	17.39	19.36	24.22	26.85	30.51			
17983	5.67	6.26	7.20	8.50	10.04	11.74	13.67	15.89	17.73	21.96	25.32	31.87	35.09	40.73	43.34		
	4.56	5.02	5.42	6.69	7.93	9.10	10.58	12.17	13.00	16.53	18.38	22.99	25.51	28.98	31.68		
18288	5.53	6.10	7.01	8.28	9.77	11.42	13.29	15.45	17.23	21.35	24.59	30.95	34.09	39.37	42.07		
	4.33	4.77	5.16	6.37	7.55	8.65	10.05	11.55	12.36	15.71	17.48	21.86	24.24	27.53	30.12		
18593	5.39	5.95	6.84	8.07	9.51	11.12	12.94	15.03	16.76	20.76	23.89	30.07	33.12	38.09	40.84		
	4.13	4.55	4.91	6.05	7.18	8.23	9.55	11.00	11.76	14.94	16.63	20.79	23.05	26.21	28.64		
18898	5.26	5.80	6.66	7.86	9.28	10.82	12.59	14.62	16.31	20.19	23.21	29.23	32.19	36.86	39.66		
	3.92	4.33	4.67	5.77	6.84	7.83	9.10	10.47	11.19	14.22	15.83	19.80	21.96	24.95	27.27		
19202	5.13	5.66	6.49	7.66	9.03	10.53	12.27	14.22	15.87	19.65	22.57	28.42	31.30	35.69	38.54	42.78	
	3.75	4.13	4.45	5.50	6.52	7.47	8.68	9.98	10.66	13.55	15.09	18.86	20.92	23.77	25.99	28.25	
19507	5.00	5.53	6.33	7.47	8.81	10.27	11.95	13.84	15.45	19.13	21.94	27.64	30.44	34.58	37.46	41.44	
	3.57	3.94	4.24	5.23	6.21	7.12	8.27	9.51	10.17	12.93	14.38	17.99	19.94	22.67	24.79	26.94	
19812	4.88	5.39	6.17	7.28	8.59	9.99	11.64	13.48	15.04	18.63	21.36	26.89	29.61	33.52	36.42	40.17	
	3.41	3.75	4.05	5.00	5.93	6.80	7.89	9.07	9.70	12.34	13.73	17.17	19.04	21.64	23.65	25.71	
20117	4.77	5.26	5.99	7.10	8.37	9.74	11.33	13.13	14.65	18.15	20.78	26.18	28.82	32.51	35.43	38.96	
	3.25	3.59	3.86	4.78	5.66	6.49	7.54	8.66	9.26	11.77	13.10	16.40	18.18	20.66	22.59	24.56	
20422	4.65	5.13	5.82	6.93	8.17	9.50	11.06	12.79	14.27	17.68	20.24	25.48	28.06	31.53	34.48	37.79	
	3.10	3.42	3.70	4.56	5.41	6.20	7.20	8.28	8.85	11.26	12.53	15.67	17.38	19.74	21.58	23.46	
20726	4.55	5.02	5.66	6.75	7.96	9.26	10.78	12.47	13.92	17.23	19.70	24.80	27.33	30.61	33.56	36.68	43.44
	2.97	3.28	3.54	4.36	5.18	5.92	6.88	7.92	8.47	10.77	11.98	14.98	16.62	18.88	20.65	22.44	26.16
21031	4.43	4.90	5.50	6.59	7.77	9.03	10.52	12.15	13.57	16.79	19.19	24.16	26.61	29.72	32.67	35.63	42.19
	2.84	3.13	3.38	4.17	4.96	5.67	6.59	7.58	8.11	10.30	11.47	14.34	15.90	18.06	19.76	21.46	25.04
21336	4.33	4.78	5.34	6.43	7.60	8.81	10.25	11.86	13.22	16.38	18.66	23.48	25.94	28.88	31.82	34.61	40.99
	2.72	3.00	3.23	3.99	4.74	5.42	6.31	7.26	7.76	9.86	10.97	13.73	15.22	17.30	18.91	20.56	23.97
21641	4.24	4.68	5.19	6.28	7.41	8.59	10.01	11.55	12.90	15.98	18.14	22.81	25.29	28.06	31.01	33.63	39.84
	2.61	2.87	3.10	3.83	4.55	5.21	6.05	6.96	7.44	9.45	10.52	13.16	14.59	16.57	18.12	19.70	22.97
21946	4.14	4.56	5.06	6.14	7.23	8.39	9.77	11.28	12.59	15.58	17.64	22.18	24.64	27.29	30.20	32.70	38.73
	2.51	2.75	2.97	3.67	4.36	4.99	5.80	6.66	7.13	9.06	10.08	12.60	13.98	15.89	17.38	18.88	22.02
22250	4.05	4.46	4.93	5.99	7.07	8.20	9.54	11.00	12.28	15.22	17.16	21.58	24.05	26.54	29.45	31.81	37.68
	2.40	2.64	2.86	3.53	4.18	4.78	5.56	6.40	6.84	8.69	9.67	12.09	13.41	15.25	16.66	18.12	21.13
22555	3.96	4.37	4.74	5.86	6.96	8.01	9.32	10.75	11.52	14.82	16.69	21.00	23.45	25.83	28.72	30.95	36.65
	2.30	2.53	2.74	3.38	4.01	4.59	5.34	6.14	6.56	8.34	9.28	11.61	12.87	14.63	15.99	17.39	20.28
22860	3.86	4.27	4.62	5.73	6.80	7.79	9.09	10.49	11.38	14.43	16.24	20.43	22.83	25.14	28.02	30.13	35.68
	2.21	2.45	2.64	3.26	3.86	4.40	5.13	5.91	6.39	8.01	8.91	11.14	12.36	14.05	15.36	16.69	19.48
23165	3.77	4.17	4.52	5.58	6.62	7.58	8.87	10.23	11.22	14.05	15.81	19.90	22.24	24.48	27.33	29.34	34.74
	2.13	2.36	2.55	3.13	3.70	4.24	4.94	5.69	6.21	7.70	8.56	10.71	11.87	13.49	14.76	16.05	18.70
23470	3.69	4.07	4.40	5.45	6.47	7.38	8.65	9.98	11.07	13.68	15.41	19.38	21.65	23.84	26.67	28.58	33.84
	2.05	2.26	2.45	3.02	3.59	4.07	4.75	5.47	6.05	7.39	8.23	10.30	11.42	12.97	14.19	15.42	17.99
23774	3.60	3.96	4.30	5.32	6.31	7.19	8.44	9.74	10.94	13.33	15.01	18.88	21.10	23.23	26.05	27.84	32.98
	1.98	2.18	2.36	2.91	3.44	3.91	4.58	5.28	5.91	7.12	7.92	9.90	10.98	12.49	13.64	14.84	17.30
24079	3.53	3.88	4.21	5.19	6.17	7.01	8.24	9.51	10.68	13.00	14.63	18.41	20.57	22.64	25.43	27.14	32.15
	1.91	2.10	2.29	2.80	3.32	3.77	4.42	5.07	5.69	6.84	7.61	9.54	10.58	12.01	13.13	14.27	16.65
24384	3.44	3.79	4.11	5.06	6.02	6.84	8.04	9.29	10.43	12.68	14.27	17.95	20.05	22.08	24.83	26.47	31.34
	1.85	2.02	2.20	2.69	3.21	3.63	4.26	4.90	5.48	6.59	7.34	9.17	10.18	11.57	12.65	13.74	16.03
24689	3.37	3.70	4.02	4.94	5.89	6.66	7.83	9.07	10.20	12.37	13.92	17.51	19.57	21.54	24.26	25.81	30.57
	1.78	1.95	2.13	2.61	3.09	3.50	4.10	4.72	5.29	6.34	7.06	8.84	9.80	11.14	12.18	13.23	15.44
24994	3.29	3.63	3.92	4.83	5.76	6.50	7.64	8.87	9.96	12.06	13.58	17.08	19.08	21.01	23.71	25.18	29.82
	1.72	1.89	2.04	2.51	2.99	3.37	3.95	4.56	5.12	6.12	6.81	8.52	9.45	10.74	11.74	12.76	14.88
25298	3.22	3.54	3.85	4.71	5.63	6.36	7.47	8.66	9.73	11.77	13.25	16.66	18.62	20.50	23.17	24.57	29.11
	1.66	1.82	1.98	2.42	2.88	3.25	3.80	4.40	4.93	5.89	6.56	8.21	9.10	10.34	11.32	12.30	14.34
25603	3.15	3.47	3.76	4.59	5.50	6.20	7.29	8.46	9.51	11.49	12.94	16.27	18.18	20.02	22.66	23.99	28.41
	1.60	1.76	1.91	2.33	2.78	3.13	3.67	4.24	4.77	5.69	6.33	7.92	8.78	9.98	10.91	11.86	13.83
25908	3.07	3.40	3.67	4.49	5.38	6.05	7.12	8.28	9.31	11.22	12.63	15.89	17.76	19.55	22.16	23.43	27.75
	1.54	1.70	1.85	2.26	2.69	3.02	3.54	4.11	4.61	5.48	6.11	7.64	8.47	9.63	10.53	11.45	13.35
26213	3.02	3.32	3.60	4.37	5.26	5.92	6.94	8.09	9.10	10.96	12.34	15.52	17.35	19.10	21.67	22.89	27.11
	1.50	1.64	1.79	2.17	2.61	2.91	3.41	3.96	4.45	5.29	5.89	7.38	8.18	9.29	10.17	11.06	12.90
26518	2.94	3.25	3.53	4.27	5.15	5.77	6.80	7.92	8.90	10.71	12.05	15.16	16.94	18.66	21.20	22.37	26.48
	1.44	1.60	1.73	2.10	2.52	2.81	3.31	3.83	4.30	5.12	5.70	7.13	7.90	8.98	9.82	10.68	12.44
26822	2.88	3.18	3.44	4.18	5.04	5.64	6.64	7.74	8.71	10.47	11.79	14.82	16.56	18.24	20.75	21.86	25.88
	1.40	1.54	1.67	2.02	2.43	2.72	3.19	3.72	4.15	4.94	5.50	6.88	7.63	8.68	9.48	10.31	12.02

ASD

METRIC LOAD TABLE/OPEN WEB STEEL JOISTS, LH-SERIES
Based on a 345 MPa Maximum Yield Strength - Loads Shown In Kilonewtons Per Meter (kN/m)

Joist Designation	48LH10	48LH11	48LH12	48LH13	48LH14	48LH15	48LH16	48LH17	48LH18	48LH19	48LH20	48LH21	48LH22	48LH23	48LH24	48LH25
Depth (mm)	1219	1219	1219	1219	1219	1219	1219	1219	1219	1219	1219	1219	1219	1219	1219	1219
Approx. Wt. (kN/m)	0.31	0.32	0.36	0.42	0.47	0.53	0.61	0.69	0.83	0.90	1.15	1.27	1.47	1.59	1.81	2.10
Span (mm) ↓																
14630	7.85	8.47	11.03	13.20	16.08	18.44	21.81	24.48	31.24	37.02						
	7.85	8.47	11.03	13.20	16.08	18.44	21.81	24.48	31.24	37.02						
14935	7.66	8.26	10.74	12.84	15.63	17.93	21.19	23.77	30.34	35.87						
	7.66	8.26	10.74	12.84	15.63	17.93	21.19	23.77	30.34	35.87						
15240	7.47	8.05	10.46	12.50	15.19	17.42	20.56	23.07	29.46	34.76						
	7.47	8.05	10.46	12.50	15.19	17.42	20.56	23.07	29.46	34.76						
15545	7.28	7.85	10.18	12.18	14.78	16.94	19.97	22.41	28.61	33.71	42.45					
	7.28	7.85	10.18	12.18	14.78	16.94	19.97	22.41	28.61	33.71	42.45					
15850	7.10	7.66	9.92	11.86	14.37	16.47	19.40	21.77	27.80	32.69	41.16					
	7.10	7.66	9.92	11.86	14.37	16.47	19.40	21.77	27.80	32.35	40.51					
16154	6.93	7.47	9.66	11.55	13.98	16.03	18.85	21.16	27.01	31.71	39.94					
	6.93	7.47	9.66	11.55	13.98	16.03	18.85	21.16	27.01	30.54	38.25					
16459	6.75	7.29	9.41	11.25	13.60	15.60	18.32	20.56	26.25	30.77	38.76	42.68				
	6.75	7.29	9.41	11.25	13.60	15.60	18.25	20.41	25.91	28.86	36.14	40.08				
16764	6.59	7.12	9.16	10.96	13.23	15.17	17.81	19.99	25.52	29.87	37.63	41.44				
	6.59	7.12	9.16	10.96	13.09	14.98	17.27	19.32	24.53	27.31	34.20	37.92				
17069	6.43	6.94	8.93	10.68	12.88	14.78	17.33	19.45	24.82	29.01	36.55	40.24				
	6.43	6.94	8.80	10.50	12.39	14.19	16.35	18.30	23.23	25.87	32.39	35.91				
17374	6.28	6.78	8.71	10.42	12.55	14.38	16.85	18.91	24.15	28.19	35.50	39.09				
	6.15	6.64	8.34	9.95	11.74	13.45	15.51	17.33	22.02	24.51	30.70	34.04				
17678	6.12	6.62	8.49	10.15	12.21	14.01	16.40	18.40	23.51	27.39	34.51	38.00				
	5.83	6.30	7.90	9.45	11.14	12.76	14.71	16.46	20.89	23.27	29.14	32.31				
17983	5.98	6.46	8.27	9.90	11.89	13.64	15.96	17.92	22.88	26.63	33.55	36.93	43.62			
	5.54	5.98	7.51	8.97	10.59	12.12	13.98	15.63	19.84	22.09	27.67	30.69	34.87			
18288	5.85	6.31	8.07	9.66	11.60	13.29	15.54	17.43	22.27	25.88	32.61	35.91	42.40			
	5.28	5.69	7.15	8.53	10.06	11.52	13.28	14.85	18.86	21.00	26.31	29.17	33.15			
18593	5.72	6.17	7.88	9.42	11.29	12.95	15.13	16.98	21.68	25.18	31.72	34.93	41.25	43.37		
	5.02	5.41	6.80	8.11	9.57	10.96	12.63	14.12	17.95	19.97	25.02	27.74	31.53	34.51		
18898	5.57	6.02	7.69	9.19	11.01	12.63	14.73	16.54	21.13	24.50	30.86	33.98	40.14	42.17		
	4.77	5.15	6.47	7.73	9.12	10.43	12.03	13.45	17.08	19.03	23.83	26.41	30.03	32.86		
19202	5.45	5.88	7.50	8.97	10.74	12.31	14.36	16.12	20.59	23.84	30.04	33.08	39.08	41.00		
	4.55	4.90	6.17	7.36	8.68	9.95	11.47	12.82	16.28	18.12	22.70	25.17	28.61	31.31		
19507	5.32	5.74	7.32	8.75	10.47	12.01	13.99	15.71	20.06	23.21	29.24	32.20	37.95	39.89		
	4.34	4.68	5.88	7.01	8.28	9.48	10.93	12.22	15.52	17.29	21.65	24.00	27.29	29.85		
19812	5.21	5.61	7.15	8.55	10.21	11.71	13.64	15.32	19.55	22.60	28.48	31.37	36.79	38.83		
	4.14	4.46	5.61	6.69	7.90	9.04	10.43	11.67	14.81	16.50	20.66	22.91	26.03	28.50		
20117	5.09	5.50	6.97	8.34	9.96	11.44	13.30	14.94	19.07	22.02	27.75	30.55	35.68	37.79	42.81	
	3.95	4.26	5.35	6.40	7.54	8.63	9.96	11.14	14.15	15.76	19.73	21.87	24.86	27.21	29.61	
20422	4.97	5.37	6.81	8.15	9.73	11.16	12.97	14.56	18.60	21.46	27.04	29.77	34.61	36.80	41.53	
	3.77	4.07	5.12	6.11	7.20	8.26	9.52	10.65	13.52	15.06	18.85	20.91	23.77	26.00	28.29	
20726	4.87	5.25	6.65	7.96	9.50	10.90	12.66	14.21	18.15	20.91	26.35	29.02	33.60	35.85	40.32	
	3.61	3.89	4.90	5.85	6.90	7.89	9.10	10.18	12.93	14.40	18.03	19.99	22.72	24.86	27.05	
21031	4.75	5.13	6.50	7.77	9.26	10.63	12.36	13.86	17.71	20.40	25.69	28.29	32.63	34.93	39.15	
	3.45	3.73	4.68	5.60	6.61	7.55	8.71	9.74	12.37	13.77	17.24	19.13	21.74	23.80	25.88	
21336	4.65	5.02	6.36	7.60	9.06	10.39	12.05	13.54	17.29	19.89	25.05	27.59	31.69	34.04	38.03	
	3.31	3.57	4.49	5.35	6.31	7.23	8.34	9.34	11.85	13.19	16.52	18.31	20.82	22.79	24.79	
21641	4.55	4.91	6.21	7.44	8.84	10.14	11.77	13.22	16.88	19.39	24.44	26.92	30.80	33.18	36.96	43.78
	3.18	3.42	4.30	5.13	6.05	6.93	7.99	8.94	11.35	12.63	15.83	17.55	19.94	21.83	23.75	27.71
21946	4.45	4.81	6.07	7.26	8.63	9.90	11.49	12.90	16.47	18.92	23.84	26.26	29.96	32.36	35.94	42.57
	3.05	3.28	4.13	4.91	5.80	6.65	7.66	8.56	10.88	12.12	15.17	16.82	19.13	20.92	22.76	26.57

ASD

METRIC LOAD TABLE/OPEN WEB STEEL JOISTS, LH-SERIES
Based on a 345 MPa Maximum Yield Strength - Loads Shown In Kilonewtons Per Meter (kN/m)

Joist Designation	48LH10	48LH11	48LH12	48LH13	48LH14	48LH15	48LH16	48LH17	48LH18	48LH19	48LH20	48LH21	48LH22	48LH23	48LH24	48LH25
Depth (mm)	1219	1219	1219	1219	1219	1219	1219	1219	1219	1219	1219	1219	1219	1219	1219	1219
Approx. Wt. (kN/m)	0.31	0.32	0.36	0.42	0.47	0.53	0.61	0.69	0.83	0.90	1.15	1.27	1.47	1.59	1.81	2.10
Span (mm) ↓																
22250	4.36	4.71	5.93	7.10	8.44	9.69	11.22	12.60	16.09	18.47	23.27	25.64	29.14	31.56	34.96	41.40
	2.91	3.15	3.95	4.72	5.57	6.37	7.35	8.23	10.43	11.63	14.56	16.14	18.34	20.08	21.84	25.48
22555	4.27	4.61	5.80	6.94	8.26	9.47	10.97	12.31	15.73	18.03	22.72	25.02	28.35	30.80	34.01	40.29
	2.80	3.02	3.79	4.53	5.35	6.12	7.06	7.89	10.02	11.16	13.98	15.49	17.61	19.27	20.97	24.45
22860	4.17	4.50	5.67	6.80	8.07	9.25	10.71	12.02	15.36	17.61	22.18	24.44	27.59	30.06	33.11	39.21
	2.68	2.90	3.64	4.34	5.13	5.88	6.77	7.57	9.61	10.71	13.42	14.88	16.91	18.50	20.13	23.49
23165	4.10	4.42	5.56	6.65	7.89	9.04	10.47	11.76	15.01	17.20	21.67	23.87	26.86	29.34	32.23	38.19
	2.58	2.78	3.50	4.18	4.93	5.64	6.50	7.28	9.25	10.30	12.90	14.30	16.25	17.78	19.35	22.57
23470	4.01	4.33	5.44	6.50	7.72	8.85	10.24	11.49	14.68	16.79	21.17	23.32	26.18	28.66	31.40	37.19
	2.48	2.68	3.37	4.02	4.74	5.42	6.26	7.00	8.88	9.89	12.39	13.74	15.63	17.10	18.60	21.70
23774	3.92	4.23	5.32	6.37	7.54	8.66	10.01	11.23	14.36	16.41	20.69	22.78	25.51	27.99	30.60	36.25
	2.39	2.58	3.23	3.86	4.56	5.22	6.02	6.74	8.55	9.51	11.92	13.22	15.03	16.44	17.89	20.86
24079	3.85	4.14	5.21	6.24	7.38	8.47	9.79	10.98	14.03	16.05	20.19	22.27	24.86	27.34	29.82	35.33
	2.30	2.48	3.12	3.72	4.39	5.03	5.79	6.47	8.23	9.16	11.47	12.72	14.46	15.81	17.22	20.08
24384	3.76	4.07	5.10	6.11	7.22	8.28	9.57	10.75	13.73	15.65	19.70	21.77	24.24	26.72	29.08	34.45
	2.21	2.39	3.00	3.59	4.23	4.84	5.57	6.24	7.92	8.81	11.04	12.24	13.92	15.23	16.57	19.33
24689	3.69	3.98	5.00	5.98	7.07	8.11	9.36	10.52	13.44	15.26	19.22	21.29	23.64	26.12	28.37	33.59
	2.13	2.30	2.88	3.45	4.07	4.67	5.37	6.01	7.63	8.49	10.63	11.80	13.41	14.68	15.96	18.63
24994	3.59	3.88	4.90	5.86	6.93	7.95	9.17	10.30	13.14	14.90	18.73	20.82	23.07	25.53	27.68	32.77
	2.05	2.21	2.78	3.32	3.92	4.49	5.18	5.79	7.35	8.18	10.25	11.36	12.93	14.14	15.38	17.95
25298	3.51	3.79	4.80	5.73	6.77	7.77	8.97	10.06	12.87	14.53	18.30	20.37	22.51	24.97	27.01	31.98
	1.98	2.14	2.69	3.22	3.79	4.34	5.00	5.58	7.09	7.89	9.88	10.96	12.46	13.63	14.84	17.30
25603	3.44	3.72	4.69	5.60	6.62	7.60	8.77	9.85	12.60	14.18	17.86	19.93	21.97	24.43	26.37	31.23
	1.92	2.07	2.61	3.10	3.66	4.18	4.83	5.41	6.82	7.61	9.52	10.58	12.02	13.14	14.31	16.69
25908	3.37	3.63	4.59	5.48	6.47	7.44	8.58	9.63	12.30	13.86	17.43	19.48	21.46	23.90	25.75	30.50
	1.85	1.99	2.52	3.00	3.54	4.05	4.67	5.22	6.59	7.35	9.20	10.20	11.60	12.69	13.80	16.11
26213	3.29	3.56	4.49	5.37	6.33	7.28	8.40	9.42	12.02	13.52	17.03	19.03	20.95	23.37	25.15	29.78
	1.79	1.94	2.43	2.90	3.41	3.92	4.52	5.04	6.36	7.09	8.88	9.85	11.19	12.25	13.32	15.55
26518	3.22	3.48	4.39	5.25	6.20	7.12	8.21	9.22	11.74	13.22	16.63	18.59	20.47	22.88	24.57	29.11
	1.73	1.88	2.34	2.81	3.31	3.79	4.36	4.88	6.14	6.84	8.58	9.51	10.81	11.83	12.87	15.01
26822	3.16	3.41	4.30	5.15	6.07	6.97	8.04	9.03	11.47	12.93	16.27	18.18	20.02	22.40	24.02	28.44
	1.69	1.82	2.27	2.72	3.21	3.67	4.21	4.72	5.93	6.62	8.28	9.19	10.44	11.42	12.43	14.50
27127	3.09	3.34	4.21	5.03	5.93	6.82	7.88	8.84	11.22	12.63	15.90	17.77	19.57	21.93	23.48	27.81
	1.63	1.75	2.20	2.62	3.09	3.56	4.08	4.58	5.74	6.39	8.01	8.88	10.09	11.04	12.02	14.02
27432	3.03	3.28	4.13	4.93	5.82	6.68	7.70	8.65	10.97	12.36	15.54	17.38	19.13	21.48	22.95	27.18
	1.57	1.70	2.14	2.55	3.00	3.44	3.95	4.43	5.56	6.18	7.74	8.59	9.76	10.68	11.63	13.55
27737	2.97	3.21	4.04	4.84	5.69	6.53	7.55	8.47	10.72	12.08	15.20	16.98	18.70	21.04	22.46	26.59
	1.53	1.64	2.07	2.48	2.90	3.32	3.83	4.29	5.37	5.98	7.48	8.30	9.44	10.33	11.23	13.11
28042	2.91	3.15	3.96	4.74	5.58	6.40	7.39	8.30	10.49	11.82	14.87	16.62	18.30	20.62	21.96	26.02
	1.48	1.60	2.01	2.39	2.81	3.22	3.72	4.15	5.19	5.79	7.25	8.04	9.13	9.99	10.87	12.69
28346	2.86	3.09	3.88	4.64	5.47	6.27	7.25	8.14	10.27	11.57	14.56	16.27	17.92	20.21	21.49	25.46
	1.44	1.54	1.94	2.32	2.72	3.12	3.60	4.02	5.03	5.60	7.01	7.77	8.84	9.67	10.53	12.28
28651	2.80	3.03	3.80	4.55	5.35	6.15	7.10	7.98	10.05	11.32	14.24	15.92	17.52	19.80	21.04	24.92
	1.40	1.50	1.88	2.24	2.64	3.03	3.48	3.91	4.87	5.42	6.80	7.53	8.56	9.36	10.20	11.89
28956	2.74	2.97	3.73	4.46	5.25	6.02	6.96	7.82	9.83	11.07	13.95	15.58	17.16	19.40	20.59	24.40
	1.35	1.45	1.83	2.18	2.56	2.93	3.38	3.79	4.71	5.25	6.58	7.29	8.28	9.07	9.88	11.52
29261	2.69	2.91	3.66	4.37	5.15	5.91	6.82	7.66	9.63	10.85	13.65	15.26	16.81	19.03	20.16	23.89
	1.31	1.41	1.78	2.11	2.49	2.84	3.28	3.67	4.56	5.09	6.37	7.07	8.04	8.80	9.57	11.16

STANDARD LRFD LOAD TABLE

DEEP LONGSPAN STEEL JOISTS, DLH-SERIES

Based on a 50 ksi (345 MPa) Maximum Yield Strength
Spans up to and including 144 ft. adopted by the Steel Joist Institute May 1, 2000
Spans greater than 144 ft. up to and including 240 ft. adopted by the Steel Joist Institute May 18, 2010
Revised to May 18, 2010 – Effective December, 31, 2010

The **BLACK** figures in the Load Table give the TOTAL safe factored uniformly distributed load-carrying capacities, in pounds per linear foot (kiloNewtons per meter), of **LRFD** DLH-Series Steel Joists.

The approximate joist weights, in pounds per linear foot (kiloNewtons per meter), given in the Load Table may be added to the other building weights to determine the unfactored DEAD load. In all cases the factored DEAD load, including the joist self-weight, must be deducted from the TOTAL load to determine the factored LIVE load. The approximate joist weights do not include accessories.

The **RED** figures in the Load Table represent the unfactored, uniform load, in pounds per linear foot (kiloNewtons per meter), which will produce an approximate joist deflection of 1/360 of the span. This load can be linearly prorated to obtain the unfactored, uniform load for supplementary deflection criteria (i.e. the unfactored uniform load which will produce a joist deflection of 1/240 of the span may be obtained by multiplying the **RED** figures by 360/240). In no case shall the prorated, unfactored load exceed the unfactored TOTAL load-carrying capacity of the joist as given in the Standard **ASD** Load Table for Deep Longspan Steel Joists, DLH-Series.

The Load Table applies to joists with either parallel chords or pitched top chords. Joists can have a top chord pitch up to 1/2 inch per foot (42 mm per meter). If the pitch exceeds this limit, the Load Table does not apply. When top chords are pitched, the load-carrying capacities are determined by the nominal depth of the joists at the center of the span. Sloped parallel-chord joists shall use span as defined by the length along the slope.

Where the joist span is in the **BLUE SHADED** area of the Load Table, all rows of bridging shall be diagonal bridging with bolted connections at chords and intersections. Hoisting cables shall not be released until the two rows of bridging nearest the third points are completely installed. The **BLUE SHADED** area starts after 60'–0" (18288 mm) and extends up through 100'–0" (30175 mm)
.
Where the joist span is in the **GRAY SHADED** area of the Load Table, all rows of bridging shall be diagonal bridging with bolted connections at chords and intersections. Hoisting cables shall not be released until all rows of bridging are completely installed. The **GRAY SHADED** area starts after 100'–0" (30175 mm) and extends up through 240'–0" (73152 mm).

The approximate gross moment of inertia (not adjusted for shear deformation) of a standard joist listed in the Load Table may be determined as follows:

$I_j = 26.767(W)(L^3)(10^{-6})$ in^4 or $2.6953(W)(L^3)(10^{-5})$ mm^4, where W= **RED** figure in the Load Table, and
L = (span – 0.33) in feet or (span – 102) in millimeters

Loads for span increments not explicitly given in the Load Table may be determined using linear interpolation between the load values given in adjacent span columns.

*The safe factored uniform load for the spans shown in the SAFE LOAD Column is equal to (SAFE LOAD) / (span). The TOTAL safe factored uniformly distributed load-carrying capacity, for spans less than those shown in the SAFE LOAD Column are given in the MAX LOAD Column.

To solve for an unfactored **RED** figure for spans shown in the SAFE LOAD Column (or lesser spans), multiply the unfactored **RED** figure of the shortest span shown in the Load Table by (the shortest span shown in the Load Table - 0.33 feet [101 mm])^2 and divide by (the actual span - 0.33 feet [101 mm])^2. In no case shall the calculated unfactored load exceed the unfactored TOTAL load-carrying capacity of the joist as determined from the Standard **ASD** Load Table for Deep Longspan Steel Joists, DLH-Series.

LRFD

STANDARD LOAD TABLE LONGSPAN STEEL JOISTS, DLH-SERIES

Based on a 50 ksi Maximum Yield Strength - Loads Shown in Pounds per Linear Foot (plf)

Joist Designation	Approx. Wt in Lbs. Per Linear Ft (Joists only)	Depth in inches	Max Load plf	SAFE LOAD* in Lbs. Between		SPAN IN FEET														
			< 62	62-89		90	91	92	93	94	95	96	97	98	99	100	101	102	103	104
52DLH10	25	52	648	40200		447 171	436 165	427 159	418 154	409 150	400 145	391 140	384 136	376 132	369 128	361 124	354 120	346 116	340 114	334 110
52DLH11	26	52	712	44130		490 187	480 181	469 174	459 169	448 164	439 158	430 153	421 149	412 144	405 140	396 135	388 132	381 128	373 124	366 120
52DLH12	29	52	794	49230		547 204	535 197	523 191	513 185	501 179	490 173	480 168	471 163	460 158	451 153	442 149	433 144	426 140	417 135	409 132
52DLH13	34	52	964	59760		664 247	649 239	636 231	621 224	609 216	595 209	583 203	571 197	559 191	549 185	537 180	526 174	516 170	507 164	496 159
52DLH14	39	52	1103	68370		760 276	745 266	729 258	714 249	699 242	685 234	670 227	657 220	645 213	631 207	619 201	607 194	595 189	585 184	573 178
52DLH15	42	52	1239	76800		853 311	835 301	817 291	799 282	783 272	766 264	750 256	735 247	720 240	705 233	691 226	676 219	664 213	651 207	639 201
52DLH16	45	52	1335	82800		921 346	901 335	882 324	862 314	844 304	826 294	810 285	792 276	777 267	760 260	745 252	730 245	717 237	702 230	688 224
52DLH17	52	52	1537	95310		1059 395	1036 381	1014 369	991 357	970 346	951 335	930 324	912 315	892 304	874 296	858 286	840 279	823 270	808 263	792 255
			<67	67-97		98	99	100	101	102	103	104	105	106	107	108	109	110	111	112
56DLH11	26	56	631	42300		432 169	424 163	415 158	408 153	400 149	393 145	385 140	379 136	372 133	366 129	358 125	352 122	346 118	340 115	334 113
56DLH12	30	56	725	48600		496 184	486 178	477 173	468 168	459 163	450 158	442 153	433 150	426 145	417 141	409 137	402 133	394 130	388 126	381 123
56DLH13	34	56	879	58860		601 223	591 216	579 209	568 204	558 197	547 191	537 186	526 181	516 175	507 171	496 166	487 161	478 157	471 152	462 149
56DLH14	39	56	993	66540		679 249	666 242	652 234	640 228	628 221	616 214	604 209	594 202	582 196	571 190	562 186	552 181	541 175	532 171	523 167
56DLH15	42	56	1135	76020		777 281	762 272	747 264	732 256	717 248	703 242	690 234	676 228	664 221	651 215	639 209	628 204	616 198	604 192	594 188
56DLH16	46	56	1224	82020		838 313	822 304	805 294	789 285	774 277	759 269	744 262	730 254	717 247	703 240	690 233	678 227	666 221	654 214	642 209
56DLH17	51	56	1411	94530		964 356	945 345	927 335	907 325	891 316	873 306	856 298	840 289	823 281	808 273	793 266	780 258	765 251	751 245	738 238
			< 71	71-99	100-105	106	107	108	109	110	111	112	113	114	115	116	117	118	119	120
60DLH12	29	60	659	46800	46800	442 168	433 163	426 158	418 154	411 150	405 146	397 142	391 138	384 134	378 131	372 128	366 124	360 121	354 118	348 115
60DLH13	35	60	801	56880	56880	537 203	526 197	517 191	508 187	499 181	490 176	483 171	474 167	466 163	459 158	451 154	444 151	436 147	429 143	423 139
60DLH14	40	60	890	63210	63210	597 216	586 210	574 205	564 199	555 193	544 189	534 183	525 178	516 173	507 170	498 165	490 161	481 156	474 152	465 149
60DLH15	43	60	1045	74190	74190	700 255	687 248	675 242	663 235	651 228	640 223	628 216	618 210	607 205	597 200	588 194	577 190	568 185	559 180	550 175
60DLH16	46	60	1149	81570	81570	769 285	756 277	741 269	727 262	714 255	702 247	690 241	676 235	666 228	654 223	642 217	631 211	621 206	610 201	600 196
60DLH17	52	60	1320	93750	93750	885 324	868 315	853 306	837 298	822 290	807 283	793 275	778 267	765 261	751 254	739 247	726 241	714 235	702 228	690 223
60DLH18	59	60	1524	108180	108180	1021 366	1002 357	984 346	966 337	948 327	931 319	915 310	898 303	883 294	867 286	852 279	838 272	823 266	810 259	796 252
			<76	76-99	100-113	114	115	116	117	118	119	120	121	122	123	124	125	126	127	128
64DLH12	31	64	594	45120	45120	396 153	388 150	382 146	376 142	370 138	364 135	358 132	352 129	346 125	342 122	336 119	331 116	327 114	321 111	316 109
64DLH13	34	64	720	54750	54750	481 186	472 181	465 176	457 171	450 168	442 163	436 159	429 155	421 152	415 148	409 144	403 141	396 137	390 134	385 131
64DLH14	40	64	825	62730	62730	550 199	540 193	531 189	523 184	514 179	505 174	498 171	489 166	481 162	474 158	466 154	459 151	451 147	444 143	438 140
64DLH15	43	64	946	71910	71910	631 234	621 228	610 223	600 217	591 211	580 206	571 201	562 196	553 191	544 187	537 182	528 177	520 173	511 170	504 165
64DLH16	46	64	1065	80940	80940	711 262	699 254	687 248	675 242	664 235	652 229	642 224	631 218	621 213	610 208	601 203	591 198	582 193	573 189	564 184
64DLH17	52	64	1227	93270	93270	819 298	804 290	790 283	777 275	763 268	751 262	738 255	726 248	714 243	702 237	691 231	681 226	669 220	658 215	648 210
64DLH18	59	64	1417	107700	107700	945 337	928 328	912 320	897 311	880 304	867 296	852 288	838 282	823 274	810 267	798 261	784 255	772 249	760 243	748 237
			< 81	81-99	100-121	122	123	124	125	126	127	128	129	130	131	132	133	134	135	136
68DLH13	37	68	650	52650	52650	432 171	426 168	418 164	412 159	406 155	400 152	394 149	388 145	382 142	378 138	372 135	366 133	361 130	355 127	351 124
68DLH14	40	68	749	60630	60630	498 184	490 179	483 175	475 171	468 167	462 163	454 159	448 155	441 152	435 148	429 145	421 141	415 138	409 135	403 133
68DLH15	44	68	839	67980	67980	558 206	547 201	540 196	531 191	522 187	514 182	505 178	498 174	490 170	483 166	475 162	468 158	462 155	454 152	448 148
68DLH16	49	68	995	80610	80610	661 242	649 236	640 230	630 225	619 219	610 214	600 209	591 204	582 199	573 195	564 190	556 186	547 182	540 178	531 174
68DLH17	55	68	1121	90840	90840	745 275	733 268	721 262	711 256	700 249	690 244	679 238	669 232	658 228	649 222	640 217	630 212	621 208	612 203	604 198
68DLH18	61	68	1298	105150	105150	862 311	849 304	835 297	823 289	810 283	798 276	786 269	774 263	762 257	751 251	739 246	729 240	718 234	708 230	697 225
68DLH19	67	68	1495	121080	121080	993 353	976 344	961 336	946 328	931 320	916 313	901 305	888 298	874 291	861 285	847 278	835 272	822 266	810 260	798 254
			< 85	85-99	100-129	130	131	132	133	134	135	136	137	138	139	140	141	142	143	144
72DLH14	41	72	694	58950	58950	454 171	447 167	441 163	435 159	427 155	421 152	415 149	411 146	405 143	399 139	393 136	388 133	382 131	378 128	372 125
72DLH15	44	72	794	67530	67530	520 191	513 187	504 183	496 178	489 174	483 171	475 167	468 163	462 160	454 156	448 152	442 150	436 147	429 143	423 140
72DLH16	50	72	918	78060	78060	601 225	592 219	585 214	576 209	567 205	559 200	552 196	544 191	537 188	529 183	522 179	514 175	507 171	501 169	493 165
72DLH17	56	72	1033	87810	87810	676 256	667 250	657 245	648 239	639 233	630 228	621 224	612 218	603 213	595 209	586 205	579 200	571 196	564 191	556 188
72DLH18	59	72	1210	102870	102870	792 289	780 283	768 276	757 270	745 265	735 258	724 252	718 247	705 242	694 236	685 231	675 227	666 222	657 217	648 212
72DLH19	70	72	1419	120600	120600	928 328	913 321	900 313	886 306	873 300	859 293	847 286	835 280	823 274	811 268	799 263	789 257	777 251	766 247	756 241

LRFD

STANDARD LOAD TABLE LONGSPAN STEEL JOISTS, LRFD DLH-SERIES

Based on a 50 ksi Maximum Yield Strength - Loads Shown in Pounds per Linear Foot (plf)

Joist Designation	Approx. Wt in Lbs. Per Linear Ft (Joists only)	Depth in inches	Max Load (plf)	SAFE LOAD* in Lbs. Between		SPAN IN FEET															
			< 81	81-99	100-111	112	115	118	121	124	127	130	133	136	139	142	145	148	151	155	160
80DLH15	40	80	966	78240	78240	699	663	632	602	575	549	525	503	482	461	443	425	408	392	371	347
						321	296	275	255	236	220	205	192	179	167	157	147	139	130	120	109
80DLH16	46	80	1161	94020	94020	840	802	763	727	691	658	628	600	574	549	525	504	483	463	439	411
						375	347	321	297	276	257	240	224	209	196	184	172	162	152	141	128
80DLH17	53	80	1341	108630	108630	971	926	881	839	800	765	731	699	669	641	615	590	567	545	517	485
						451	416	386	358	332	309	288	269	252	235	221	207	195	183	169	154
80DLH18	60	80	1515	122760	122760	1097	1044	993	947	903	863	825	789	756	723	695	666	641	615	584	548
						516	477	441	409	380	354	330	308	288	270	253	237	223	210	194	176
80DLH19	67	80	1768	143220	143220	1280	1218	1160	1104	1052	1005	960	918	878	840	806	774	743	714	677	635
						578	533	493	458	425	396	369	344	322	301	283	266	250	235	217	197
80DLH20	75	80	1987	160980	160980	1446	1382	1323	1268	1211	1157	1104	1056	1011	968	927	891	855	821	780	731
						646	596	552	512	475	443	412	385	360	337	316	297	279	263	243	220
			< 89	89-99	100-120	121	124	127	130	133	136	139	142	145	148	151	155	160	165	170	175
88DLH16	46	88	1048	93270	93270	771	735	701	671	642	615	591	567	545	524	503	477	448	422	398	376
						361	336	313	291	272	254	238	223	210	197	186	172	156	143	130	119
88DLH17	51	88	1185	105450	105450	871	830	789	753	719	687	659	630	605	579	557	528	495	465	437	412
						404	375	349	325	304	284	266	249	234	220	207	191	173	159	146	133
88DLH18	58	88	1359	120930	120930	1001	953	908	866	827	791	756	725	695	666	639	607	569	535	503	474
						460	427	397	370	346	323	303	284	267	250	236	218	199	181	165	152
88DLH19	65	88	1572	139890	139890	1157	1101	1049	999	954	912	873	836	801	770	738	701	657	617	580	547
						521	484	450	420	392	367	343	322	302	284	267	248	225	205	187	172
88DLH20	76	88	1808	160950	160950	1334	1281	1232	1184	1133	1085	1041	998	959	921	885	841	790	743	700	660
						623	579	539	502	469	438	410	385	361	340	320	296	269	246	224	206
88DLH21	89	88	2231	198510	198510	1649	1568	1494	1425	1361	1301	1244	1191	1143	1097	1053	999	936	880	827	779
						724	673	626	584	545	509	477	447	420	395	372	344	313	285	261	239
			< 97	97-99	100-129	130	133	136	139	142	145	148	151	155	160	165	170	175	180	185	190
96DLH17	52	96	1085	105270	105270	810	776	744	711	684	657	632	608	578	542	509	480	452	427	404	382
						389	363	339	318	298	280	263	247	229	208	190	173	159	146	134	124
96DLH18	58	96	1222	118500	118500	912	875	839	803	770	740	713	686	653	615	579	546	516	488	463	438
						443	413	386	362	340	319	300	282	261	237	216	198	181	166	153	141
96DLH19	66	96	1460	141660	141660	1091	1046	1001	957	917	878	842	809	768	720	676	636	601	566	536	507
						502	469	438	410	385	361	340	320	296	269	246	224	206	189	174	161
96DLH20	74	96	1644	159420	159420	1236	1184	1131	1083	1037	993	952	915	868	815	766	721	680	642	607	574
						569	531	496	465	436	409	385	362	336	305	277	254	233	214	196	181
96DLH21	90	96	2062	200010	200010	1541	1473	1410	1350	1296	1243	1196	1149	1093	1026	965	908	856	809	765	724
						698	652	610	571	535	503	473	445	412	374	341	312	286	263	242	224
96DLH22	102	96	2310	224070	224070	1725	1662	1601	1542	1487	1436	1382	1329	1264	1188	1118	1054	995	941	890	843
						811	757	708	663	622	584	549	517	479	435	396	362	332	305	281	259
			< 100	100-104	105-138	139	142	145	148	151	155	160	165	170	175	180	185	190	195	200	205
104DLH18	59	104	1100	1100	115470	831	798	768	734	708	674	635	601	568	537	508	482	458	435	414	394
						426	400	375	353	332	307	279	255	233	213	195	180	167	154	142	132
104DLH19	67	104	1337	1337	140430	1011	971	933	897	861	819	770	727	686	648	613	581	552	524	497	473
						484	453	426	401	377	349	317	289	265	242	222	204	189	175	162	150
104DLH20	75	104	1504	1504	157890	1146	1107	1071	1032	992	944	886	833	784	739	698	660	626	593	563	535
						548	513	483	453	427	395	359	327	299	274	251	232	214	198	184	170
104DLH21	90	104	1890	1890	198480	1434	1376	1322	1271	1220	1160	1091	1028	970	917	866	821	779	740	703	668
						673	632	593	558	525	486	442	403	368	337	307	284	263	244	226	209
104DLH22	104	104	2119	2119	222540	1607	1551	1499	1449	1401	1340	1261	1189	1121	1059	1001	949	901	855	812	774
						783	734	689	648	610	564	513	468	428	392	359	331	306	283	262	244
104DLH23	109	104	2334	2334	245100	1772	1712	1644	1578	1514	1434	1348	1267	1192	1125	1062	1004	952	902	857	814
						819	768	721	678	638	590	536	489	447	410	377	347	320	296	274	254
			< 100	100-112	113-147	148	151	155	160	165	170	175	180	185	190	195	200	205	210	215	220
112DLH19	67	112	1223	1223	138150	935	900	857	805	759	716	677	643	610	579	549	523	498	476	454	433
						466	439	406	369	336	308	281	259	238	220	203	189	175	162	151	142
112DLH20	76	112	1384	1384	156360	1065	1032	985	927	873	824	780	740	702	667	632	603	574	547	522	500
						528	497	459	418	381	348	319	293	270	249	231	213	198	184	171	160
112DLH21	91	112	1743	1743	196950	1337	1287	1223	1150	1083	1022	966	915	867	823	782	744	709	676	645	616
						650	612	566	514	469	429	393	361	333	306	283	263	244	227	211	198
112DLH22	104	112	1956	1956	221010	1499	1451	1392	1321	1250	1181	1117	1057	1002	952	904	860	820	782	745	712
						755	711	657	598	545	498	457	419	386	356	329	306	283	264	246	229
112DLH23	110	112	2155	2155	243540	1653	1601	1535	1454	1369	1288	1214	1147	1086	1030	977	928	882	839	800	763
						790	744	688	625	571	522	478	439	404	373	345	320	297	276	257	239
112DLH24	131	112	2555	2555	288660	1956	1895	1818	1727	1631	1539	1455	1379	1307	1241	1179	1123	1070	1019	972	928
						957	901	834	758	691	632	579	532	489	451	418	387	359	334	311	291
			< 100	100-120	121-165	166	170	175	180	185	190	195	200	205	210	215	220	225	230	235	240
120DLH20	77	120	1229	1229	148650	896	856	808	766	726	691	658	627	598	570	544	521	498	477	457	439
						430	400	367	338	311	287	265	246	228	212	198	185	172	161	151	142
120DLH21	92	120	1528	1528	184860	1122	1072	1012	959	908	864	821	782	745	710	678	648	620	593	569	545
						530	494	452	416	383	353	326	303	281	262	244	227	212	199	186	175
120DLH22	104	120	1751	1751	211920	1283	1235	1169	1106	1049	997	949	903	860	821	783	749	716	686	657	629
						616	574	526	483	445	411	380	352	327	304	283	265	247	231	217	204
120DLH23	111	120	1938	1938	234480	1415	1361	1287	1219	1157	1099	1046	995	948	903	862	822	786	751	719	689
						644	601	551	506	466	430	397	369	341	318	296	276	258	241	227	213
120DLH24	132	120	2298	2298	278070	1676	1610	1522	1441	1367	1300	1237	1177	1122	1070	1022	977	934	894	857	821
						781	728	667	613	565	521	482	447	414	386	359	335	313	293	275	258
120DLH25	152	120	2633	2633	318630	1926	1847	1748	1656	1571	1492	1418	1350	1287	1228	1173	1122	1073	1026	983	943
						915	853	782	718	661	610	564	523	485	452	421	393	367	344	322	302

LRFD

METRIC LOAD TABLE LONGSPAN STEEL JOISTS, DLH-SERIES

Based on 345 MPa Maximum Yield Strength - Loads Shown in Kilonewtons per Meter (kN/m)

Joist Designation	Approx. Wt in kN Per Meter (Joists only)	Depth in mm	Max Load kN/m	SAFE LOAD* in kN Between		SPAN IN MILLIMETERS														
			<18898	18898-27127		27432	27737	28042	28346	28651	28956	29261	29566	29870	30175	30480	30785	31090	31394	31699
52DLH10	0.36	1321	9.45	178.81		6.52	6.37	6.23	6.10	5.97	5.84	5.71	5.60	5.49	5.38	5.27	5.16	5.05	4.96	4.88
						2.49	2.40	2.32	2.24	2.18	2.11	2.04	1.98	1.92	1.86	1.80	1.75	1.69	1.66	1.60
52DLH11	0.38	1321	10.39	196.30		7.15	7.00	6.85	6.69	6.54	6.41	6.28	6.15	6.01	5.91	5.77	5.66	5.56	5.45	5.34
						2.72	2.64	2.53	2.46	2.39	2.30	2.23	2.17	2.10	2.04	1.97	1.92	1.86	1.80	1.75
52DLH12	0.42	1321	11.59	218.98		7.99	7.81	7.63	7.48	7.31	7.15	7.00	6.87	6.72	6.58	6.45	6.32	6.21	6.08	5.97
						2.97	2.87	2.78	2.69	2.61	2.52	2.45	2.37	2.30	2.23	2.17	2.10	2.04	1.97	1.92
52DLH13	0.50	1321	14.07	265.82		9.69	9.47	9.28	9.06	8.88	8.69	8.51	8.34	8.16	8.01	7.83	7.68	7.53	7.39	7.24
						3.60	3.48	3.37	3.26	3.15	3.05	2.96	2.87	2.78	2.69	2.62	2.53	2.48	2.39	2.32
52DLH14	0.57	1321	16.10	304.12		11.09	10.87	10.63	10.42	10.20	10.00	9.78	9.58	9.41	9.21	9.04	8.86	8.69	8.53	8.36
						4.02	3.88	3.76	3.63	3.53	3.41	3.31	3.21	3.10	3.02	2.93	2.83	2.75	2.68	2.59
52DLH15	0.61	1321	18.08	341.62		12.45	12.19	11.93	11.66	11.42	11.18	10.94	10.72	10.50	10.28	10.09	9.87	9.69	9.50	9.32
						4.53	4.39	4.24	4.11	3.96	3.85	3.73	3.60	3.50	3.40	3.29	3.19	3.10	3.02	2.93
52DLH16	0.66	1321	19.48	368.31		13.44	13.15	12.87	12.58	12.32	12.06	11.82	11.55	11.33	11.09	10.87	10.66	10.46	10.24	10.04
						5.04	4.88	4.72	4.58	4.43	4.29	4.15	4.02	3.89	3.79	3.67	3.57	3.45	3.35	3.26
52DLH17	0.76	1321	22.43	423.96		15.45	15.12	14.79	14.46	14.16	13.87	13.57	13.30	13.02	12.76	12.52	12.25	12.01	11.79	11.55
						5.76	5.56	5.38	5.21	5.04	4.88	4.72	4.59	4.43	4.31	4.17	4.07	3.94	3.83	3.72
			<20422	20422-29566		29870	30175	30480	30785	31090	31394	31699	32004	32309	32614	32918	33223	33528	33833	34138
56DLH11	0.38	1422	9.21	188.15		6.30	6.19	6.06	5.95	5.84	5.73	5.62	5.53	5.42	5.34	5.23	5.14	5.05	4.96	4.88
						2.46	2.37	2.30	2.23	2.17	2.11	2.04	1.98	1.94	1.88	1.82	1.78	1.72	1.67	1.64
56DLH12	0.44	1422	10.58	216.18		7.24	7.09	6.96	6.82	6.69	6.56	6.45	6.32	6.21	6.08	5.97	5.86	5.75	5.66	5.56
						2.68	2.59	2.52	2.45	2.37	2.30	2.23	2.18	2.11	2.05	1.99	1.94	1.89	1.83	1.79
56DLH13	0.50	1422	12.82	261.82		8.77	8.62	8.44	8.29	8.14	7.99	7.83	7.68	7.53	7.39	7.24	7.11	6.98	6.87	6.74
						3.25	3.15	3.05	2.97	2.87	2.78	2.71	2.64	2.55	2.49	2.42	2.34	2.29	2.21	2.17
56DLH14	0.57	1422	14.49	295.98		9.91	9.71	9.52	9.34	9.17	8.99	8.82	8.66	8.49	8.34	8.20	8.05	7.90	7.77	7.63
						3.63	3.53	3.41	3.32	3.22	3.12	3.05	2.94	2.86	2.77	2.71	2.64	2.55	2.49	2.43
56DLH15	0.61	1422	16.57	338.15		11.33	11.12	10.90	10.68	10.46	10.26	10.06	9.87	9.69	9.50	9.32	9.17	8.99	8.82	8.66
						4.10	3.96	3.85	3.73	3.61	3.53	3.41	3.32	3.22	3.13	3.05	2.97	2.88	2.80	2.74
56DLH16	0.67	1422	17.86	364.84		12.23	11.99	11.75	11.51	11.29	11.07	10.85	10.66	10.46	10.26	10.06	9.89	9.71	9.54	9.36
						4.56	4.43	4.29	4.15	4.04	3.92	3.82	3.70	3.60	3.50	3.40	3.31	3.22	3.12	3.05
56DLH17	0.74	1422	20.59	420.49		14.07	13.79	13.52	13.24	13.00	12.74	12.49	12.25	12.01	11.79	11.58	11.38	11.16	10.96	10.77
						5.19	5.03	4.88	4.74	4.61	4.46	4.34	4.21	4.10	3.98	3.88	3.76	3.66	3.57	3.47
			<21641	21641-30175	30480-32004	32309	32614	32918	33223	33528	33833	34138	34442	34747	35052	35357	35662	35966	36271	36576
60DLH12	0.42	1524	9.62	208.17	208.17	6.45	6.32	6.21	6.10	5.99	5.91	5.80	5.71	5.60	5.51	5.42	5.34	5.25	5.16	5.07
						2.45	2.37	2.3	2.24	2.18	2.13	2.07	2.01	1.95	1.91	1.86	1.80	1.76	1.72	1.67
60DLH13	0.51	1524	11.68	253.01	253.01	7.83	7.68	7.55	7.42	7.28	7.15	7.04	6.91	6.80	6.69	6.58	6.47	6.37	6.26	6.17
						2.96	2.87	2.78	2.72	2.64	2.56	2.49	2.43	2.37	2.30	2.24	2.20	2.14	2.08	2.02
60DLH14	0.58	1524	12.99	281.17	281.17	8.71	8.55	8.38	8.23	8.09	7.94	7.79	7.66	7.53	7.39	7.26	7.15	7.02	6.91	6.78
						3.15	3.06	2.99	2.90	2.81	2.75	2.67	2.59	2.52	2.48	2.40	2.34	2.27	2.21	2.17
60DLH15	0.63	1524	15.25	330.01	330.01	10.22	10.02	9.85	9.67	9.50	9.34	9.17	9.01	8.86	8.71	8.58	8.42	8.29	8.16	8.03
						3.72	3.61	3.53	3.42	3.32	3.25	3.15	3.06	2.99	2.91	2.83	2.77	2.69	2.62	2.55
60DLH16	0.67	1524	16.76	362.84	362.84	11.23	11.03	10.81	10.61	10.42	10.24	10.06	9.87	9.71	9.54	9.36	9.21	9.06	8.90	8.75
						4.15	4.04	3.92	3.82	3.72	3.60	3.51	3.42	3.32	3.25	3.16	3.07	3.00	2.93	2.86
60DLH17	0.76	1524	19.26	417.02	417.02	12.91	12.67	12.45	12.21	11.99	11.77	11.58	11.36	11.16	10.96	10.79	10.59	10.42	10.24	10.06
						4.72	4.59	4.46	4.34	4.23	4.13	4.01	3.89	3.80	3.70	3.60	3.51	3.42	3.32	3.25
60DLH18	0.86	1524	22.24	481.20	481.20	14.90	14.62	14.36	14.09	13.83	13.59	13.35	13.11	12.89	12.65	12.43	12.23	12.01	11.82	11.62
						5.34	5.21	5.04	4.91	4.77	4.65	4.52	4.42	4.29	4.17	4.07	3.96	3.88	3.77	3.67
			<23166	23165-30175	30480-34442	34747	35052	35357	35662	35966	36271	36576	36881	37186	37490	37795	38100	38405	38710	39014
64DLH12	0.45	1626	8.66	200.70	200.70	5.77	5.66	5.58	5.49	5.40	5.31	5.23	5.14	5.05	4.99	4.90	4.83	4.77	4.68	4.61
						2.23	2.18	2.13	2.07	2.01	1.97	1.92	1.88	1.82	1.78	1.73	1.69	1.66	1.61	1.59
64DLH13	0.50	1626	10.50	243.54	243.54	7.02	6.89	6.78	6.67	6.56	6.45	6.37	6.26	6.15	6.06	5.97	5.88	5.77	5.69	5.62
						2.71	2.64	2.56	2.49	2.45	2.37	2.32	2.26	2.21	2.15	2.10	2.05	1.99	1.95	1.91
64DLH14	0.58	1626	12.03	279.03	279.03	8.03	7.88	7.74	7.63	7.50	7.37	7.26	7.13	7.02	6.91	6.80	6.69	6.58	6.47	6.39
						2.90	2.81	2.75	2.68	2.61	2.53	2.49	2.42	2.36	2.30	2.24	2.20	2.14	2.08	2.04
64DLH15	0.63	1626	13.81	319.87	319.87	9.21	9.06	8.90	8.75	8.62	8.47	8.34	8.20	8.07	7.94	7.83	7.70	7.59	7.46	7.35
						3.41	3.32	3.25	3.16	3.07	3.00	2.93	2.86	2.78	2.72	2.65	2.58	2.52	2.48	2.40
64DLH16	0.67	1626	15.54	360.03	360.03	10.37	10.20	10.02	9.85	9.69	9.52	9.36	9.21	9.06	8.90	8.77	8.62	8.49	8.36	8.23
						3.82	3.70	3.61	3.53	3.42	3.34	3.26	3.18	3.10	3.03	2.96	2.88	2.81	2.75	2.68
64DLH17	0.76	1626	17.90	414.88	414.88	11.95	11.73	11.53	11.33	11.14	10.96	10.77	10.59	10.42	10.24	10.09	9.93	9.76	9.61	9.45
						4.34	4.23	4.13	4.01	3.91	3.82	3.72	3.61	3.54	3.45	3.37	3.29	3.21	3.13	3.06
64DLH18	0.86	1626	20.68	479.07	479.07	13.79	13.55	13.30	13.09	12.84	12.65	12.43	12.23	12.01	11.82	11.64	11.44	11.27	11.09	10.92
						4.91	4.78	4.67	4.53	4.43	4.31	4.20	4.11	3.99	3.89	3.80	3.72	3.63	3.54	3.45
			<24689	24689-30175	30480-36881	37186	37490	37795	38100	38405	38710	39014	39319	39624	39929	40234	40538	40843	41148	41453
68DLH13	0.54	1727	9.49	234.19	234.19	6.30	6.21	6.10	6.01	5.93	5.84	5.75	5.66	5.58	5.51	5.42	5.34	5.27	5.18	5.12
						2.49	2.45	2.39	2.32	2.26	2.21	2.17	2.11	2.07	2.01	1.97	1.94	1.89	1.85	1.80
68DLH14	0.58	1727	10.93	269.69	269.69	7.26	7.15	7.04	6.93	6.82	6.74	6.63	6.54	6.43	6.34	6.26	6.15	6.06	5.97	5.88
						2.68	2.61	2.55	2.49	2.43	2.37	2.32	2.26	2.21	2.15	2.11	2.05	2.01	1.97	1.94
68DLH15	0.64	1727	12.25	302.39	302.39	8.14	7.99	7.88	7.74	7.61	7.50	7.37	7.26	7.15	7.04	6.93	6.82	6.74	6.63	6.54
						3.00	2.93	2.86	2.78	2.72	2.65	2.59	2.53	2.48	2.42	2.36	2.30	2.26	2.21	2.15
68DLH16	0.72	1727	14.52	358.57	358.57	9.65	9.47	9.34	9.19	9.04	8.90	8.75	8.62	8.49	8.36	8.23	8.12	7.99	7.88	7.74
						3.53	3.44	3.35	3.28	3.19	3.12	3.05	2.97	2.90	2.84	2.77	2.71	2.65	2.59	2.53
68DLH17	0.80	1727	16.36	404.07	404.07	10.87	10.70	10.52	10.37	10.22	10.06	9.91	9.76	9.61	9.47	9.34	9.19	9.06	8.93	8.82
						4.01	3.91	3.82	3.73	3.63	3.56	3.47	3.38	3.32	3.23	3.16	3.09	3.03	2.96	2.88
68DLH18	0.89	1727	18.95	467.73	467.73	12.58	12.39	12.19	12.01	11.82	11.64	11.47	11.29	11.12	10.96	10.79	10.63	10.48	10.33	10.17
						4.53	4.43	4.33	4.21	4.13	4.02	3.92	3.83	3.75	3.66	3.59	3.50	3.41	3.35	3.28
68DLH19	0.98	1727	21.82	538.59	538.59	14.49	14.25	14.03	13.81	13.59	13.37	13.15	12.95	12.76	12.56	12.36	12.19	11.99	11.82	11.64
						5.15	5.02	4.90	4.78	4.67	4.56	4.45	4.34	4.24	4.15	4.05	3.96	3.88	3.79	3.70
			<25908	25908-30175	30480-39319	39624	39929	40234	40538	40843	41148	41453	41758	42062	42367	42672	42977	43282	43586	43891
72DLH14	0.60	1829	10.13	262.22	262.22	6.63	6.52	6.43	6.34	6.23	6.15	6.06	5.99	5.91	5.82	5.73	5.66	5.58	5.51	5.42
						2.49	2.43	2.37	2.32	2.26	2.21	2.17	2.13	2.08	2.02	1.98	1.94	1.91	1.86	1.82
72DLH15	0.64	1829	11.59	300.38	300.38	7.59	7.48	7.35	7.24	7.13	7.04	6.93	6.82	6.74	6.63	6.54	6.45	6.37	6.26	6.17
						2.78	2.72	2.67	2.59	2.53	2.49	2.43	2.37	2.33	2.27	2.21	2.18	2.14	2.08	2.04
72DLH16	0.73	1829	13.39	347.22	347.22	8.77	8.64	8.53	8.40	8.27	8.16	8.05	7.94	7.83	7.72	7.61	7.50	7.39	7.31	7.20
						3.28	3.19	3.12	3.05	2.99	2.91	2.86	2.78	2.74	2.67	2.61	2.55	2.49	2.46	2.40
72DLH17	0.82	1829	15.08	390.59	390.59	9.87	9.74	9.58	9.45	9.32	9.19	9.06	8.93	8.80	8.69	8.55	8.44	8.34	8.23	8.12
						3.73	3.64	3.57	3.48	3.40	3.32	3.26	3.18	3.10	3.05	2.99	2.91	2.86	2.78	2.74
72DLH18	0.86	1829	17.66	457.58	457.58	11.55	11.38	11.20	11.05	10.87	10.72	10.57	10.48	10.28	10.13	10.00	9.85	9.71	9.58	9.45
						4.21	4.13	4.02	3.94	3.86	3.76	3.67	3.60	3.53	3.44	3.37	3.31	3.23	3.16	3.09
72DLH19	1.02	1829	20.70	536.45	536.45	13.55	13.33	13.13	12.93	12.74	12.54	12.36	12.19	12.01	11.84	11.66	11.51	11.33	11.18	11.03
						4.78	4.68	4.56	4.46	4.37	4.27	4.17	4.08	3.99	3.91	3.83	3.75	3.66	3.60	3.51

LRFD

METRIC LOAD TABLE LONGSPAN STEEL JOISTS, LRFD DLH-SERIES

Based on 345 MPa Maximum Yield Strength - Loads Shown in Kilonewtons per Meter (kN/m)

Joist Designation	Approx. Wt in Kn Per Meter (Joists only)	Depth in mm	Max Load (kN/m)	SAFE LOAD* in kN Between		SPAN IN MILLIMETERS															
			<24689	24689-30175	30480-33833	34138	35052	35966	36881	37795	38710	39624	40538	41453	42367	43282	44196	45110	46025	47244	48768
80DLH15	0.58	2032	14.09	348.02	348.02	10.20	9.67	9.21	8.77	8.38	8.01	7.66	7.33	7.02	6.72	6.45	6.19	5.95	5.71	5.42	5.07
						4.68	4.31	4.01	3.72	3.44	3.21	2.99	2.80	2.61	2.43	2.29	2.14	2.02	1.89	1.75	1.59
80DLH16	0.67	2032	16.94	418.22	418.22	12.25	11.71	11.14	10.61	10.09	9.61	9.17	8.75	8.38	8.01	7.66	7.35	7.04	6.76	6.41	5.99
						5.47	5.06	4.68	4.33	4.02	3.75	3.50	3.26	3.05	2.86	2.68	2.51	2.36	2.21	2.05	1.86
80DLH17	0.77	2032	19.57	483.21	483.21	14.16	13.50	12.84	12.23	11.66	11.16	10.66	10.20	9.76	9.34	8.97	8.60	8.27	7.94	7.55	7.08
						6.58	6.07	5.63	5.22	4.84	4.50	4.20	3.92	3.67	3.42	3.22	3.02	2.84	2.67	2.46	2.24
80DLH18	0.88	2032	22.15	546.06	546.06	16.00	15.23	14.49	13.81	13.17	12.58	12.03	11.51	11.03	10.55	10.13	9.71	9.34	8.97	8.53	8.00
						7.53	6.96	6.43	5.96	5.54	5.16	4.81	4.49	4.20	3.94	3.69	3.45	3.25	3.06	2.83	2.56
80DLH19	0.98	2032	25.80	637.07	637.07	18.67	17.77	16.92	16.11	15.34	14.66	14.01	13.39	12.80	12.25	11.75	11.29	10.83	10.42	9.88	9.27
						8.43	7.77	7.19	6.68	6.20	5.77	5.38	5.02	4.69	4.39	4.13	3.88	3.64	3.42	3.16	2.87
80DLH20	1.09	2032	29.00	716.07	716.07	21.10	20.16	19.30	18.49	17.66	16.87	16.11	15.41	14.75	14.11	13.52	13.00	12.47	11.97	11.38	10.67
						9.42	8.69	8.05	7.47	6.93	6.46	6.01	5.61	5.25	4.91	4.61	4.33	4.07	3.83	3.54	3.21
			<27127	27127-30175	30480-36576	36881	37795	38710	39624	40538	41453	42367	43282	44196	45110	46025	47244	48768	50292	51816	53340
88DLH16	0.67	2235	15.30	414.88	414.88	11.25	10.72	10.22	9.78	9.36	8.97	8.62	8.27	7.94	7.63	7.33	6.96	6.54	6.16	5.81	5.49
						5.26	4.90	4.56	4.24	3.96	3.70	3.47	3.25	3.06	2.87	2.71	2.51	2.27	2.08	1.89	1.73
88DLH17	0.74	2235	17.29	469.06	469.06	12.71	12.10	11.51	10.98	10.48	10.02	9.61	9.19	8.82	8.44	8.12	7.70	7.22	6.78	6.38	6.01
						5.89	5.47	5.09	4.74	4.43	4.14	3.88	3.63	3.41	3.21	3.02	2.78	2.52	2.32	2.13	1.94
88DLH18	0.85	2235	19.83	537.92	537.92	14.60	13.90	13.24	12.63	12.06	11.53	11.03	10.57	10.13	9.71	9.32	8.86	8.31	7.81	7.34	6.91
						6.71	6.23	5.79	5.39	5.04	4.71	4.42	4.14	3.89	3.64	3.44	3.18	2.90	2.64	2.40	2.21
88DLH19	0.95	2235	22.94	622.26	622.26	16.87	16.06	15.30	14.57	13.92	13.30	12.74	12.19	11.68	11.23	10.77	10.23	9.58	9.01	8.47	7.99
						7.60	7.06	6.56	6.12	5.72	5.35	5.00	4.69	4.40	4.14	3.89	3.61	3.28	2.99	2.72	2.51
88DLH20	1.11	2235	26.39	715.94	715.94	19.46	18.69	17.97	17.27	16.52	15.82	15.19	14.55	13.98	13.44	12.91	12.28	11.53	10.85	10.22	9.63
						9.09	8.44	7.86	7.32	6.84	6.39	5.98	5.61	5.26	4.96	4.67	4.31	3.92	3.59	3.26	3.00
88DLH21	1.30	2235	32.56	883.14	883.14	24.05	22.87	21.80	20.79	19.85	18.97	18.14	17.38	16.68	16.00	15.36	14.57	13.65	12.84	12.07	11.37
						10.56	9.82	9.13	8.52	7.95	7.42	6.96	6.52	6.12	5.76	5.42	5.02	4.56	4.15	3.80	3.48
			<29566	29566-30175	30480-39319	39624	40538	41453	42367	43282	44196	45110	46025	47244	48768	50292	51816	53340	54864	56388	57912
96DLH17	0.76	2438	15.84	468.26	468.26	11.82	11.31	10.85	10.37	9.98	9.58	9.21	8.86	8.44	7.91	7.43	7.00	6.60	6.23	5.90	5.58
						5.67	5.29	4.94	4.64	4.34	4.08	3.83	3.60	3.34	3.03	2.77	2.52	2.32	2.13	1.95	1.80
96DLH18	0.85	2438	17.84	527.11	527.11	13.30	12.76	12.23	11.71	11.23	10.79	10.39	10.00	9.53	8.97	8.44	7.96	7.53	7.12	6.76	6.39
						6.46	6.02	5.63	5.28	4.96	4.65	4.37	4.11	3.80	3.45	3.15	2.88	2.64	2.42	2.23	2.05
96DLH19	0.96	2438	21.31	630.13	630.13	15.91	15.25	14.60	13.96	13.37	12.80	12.28	11.79	11.20	10.50	9.87	9.28	8.77	8.26	7.82	7.39
						7.32	6.84	6.39	5.98	5.61	5.26	4.96	4.67	4.31	3.92	3.59	3.26	3.00	2.75	2.53	2.34
96DLH20	1.08	2438	23.99	709.13	709.13	18.03	17.27	16.50	15.80	15.12	14.49	13.90	13.35	12.67	11.90	11.18	10.52	9.93	9.36	8.86	8.38
						8.30	7.74	7.23	6.78	6.36	5.96	5.61	5.28	4.90	4.45	4.04	3.70	3.40	3.12	2.86	2.64
96DLH21	1.31	2438	30.09	889.68	889.68	22.48	21.49	20.57	19.70	18.91	18.14	17.44	16.76	15.95	14.97	14.09	13.25	12.49	11.81	11.16	10.57
						10.18	9.51	8.90	8.33	7.80	7.34	6.90	6.49	6.01	5.45	4.97	4.55	4.17	3.83	3.53	3.26
96DLH22	1.49	2438	33.71	996.71	996.71	25.17	24.25	23.35	22.50	21.69	20.94	20.16	19.39	18.45	17.33	16.32	15.38	14.52	13.74	12.99	12.30
						11.83	11.04	10.33	9.67	9.07	8.52	8.01	7.54	6.99	6.34	5.77	5.28	4.84	4.45	4.10	3.77
			<30480	30480-31699	32004-42062	42367	43282	44196	45110	46025	47244	48768	50292	51816	53340	54864	56388	57912	59436	60960	62484
104DLH18	0.86	2642	16.06	16.06	513.63	12.12	11.64	11.20	10.70	10.33	9.84	9.27	8.77	8.29	7.83	7.42	7.04	6.69	6.34	6.04	5.75
						6.21	5.83	5.47	5.15	4.84	4.48	4.07	3.72	3.40	3.10	2.84	2.62	2.43	2.24	2.07	1.92
104DLH19	0.98	2642	19.51	19.51	624.66	14.75	14.16	13.61	13.09	12.56	11.95	11.24	10.61	10.01	9.45	8.95	8.48	8.05	7.65	7.26	6.91
						7.06	6.61	6.21	5.85	5.50	5.09	4.62	4.21	3.86	3.53	3.23	2.97	2.75	2.55	2.36	2.18
104DLH20	1.09	2642	21.95	21.95	702.32	16.72	16.15	15.63	15.06	14.46	13.78	12.93	12.16	11.44	10.79	10.19	9.63	9.14	8.66	8.22	7.81
						7.99	7.48	7.04	6.61	6.23	5.76	5.23	4.77	4.36	3.99	3.66	3.38	3.12	2.88	2.68	2.48
104DLH21	1.31	2642	27.58	27.58	882.88	20.92	20.07	19.28	18.54	17.79	16.93	15.92	15.00	14.16	13.38	12.64	11.98	11.37	10.80	10.26	9.75
						9.82	9.22	8.65	8.14	7.66	7.09	6.45	5.88	5.37	4.91	4.48	4.14	3.83	3.56	3.29	3.05
104DLH22	1.52	2642	30.93	30.93	989.90	23.44	22.63	21.86	21.14	20.44	19.56	18.41	17.35	16.36	15.45	14.61	13.85	13.15	12.47	11.85	11.29
						11.42	10.71	10.05	9.45	8.90	8.23	7.48	6.82	6.24	5.72	5.23	4.83	4.46	4.13	3.82	3.56
104DLH23	1.59	2642	34.06	34.06	1090.00	25.85	24.97	23.99	23.02	22.08	20.97	19.67	18.49	17.40	16.41	15.49	14.65	13.90	13.17	12.51	11.88
						11.95	11.20	10.52	9.89	9.31	8.61	7.82	7.13	6.52	5.98	5.50	5.06	4.67	4.31	3.99	3.70
			<30480	30480-34138	34442-44806	45110	46025	47244	48768	50292	51816	53340	54864	56388	57912	59436	60960	62484	64008	65532	67056
112DLH19	0.98	2845	17.85	17.85	614.52	13.63	13.13	12.51	11.75	11.07	10.45	9.88	9.39	8.90	8.44	8.01	7.63	7.26	6.95	6.63	6.32
						6.80	6.40	5.92	5.38	4.90	4.49	4.10	3.77	3.47	3.21	2.96	2.75	2.55	2.36	2.20	2.07
112DLH20	1.11	2845	20.20	20.20	695.52	15.54	15.06	14.38	13.52	12.74	12.03	11.38	10.80	10.24	9.74	9.23	8.80	8.38	7.99	7.61	7.30
						7.70	7.25	6.69	6.10	5.56	5.07	4.65	4.27	3.94	3.63	3.37	3.10	2.88	2.68	2.49	2.33
112DLH21	1.33	2845	25.43	25.43	876.07	19.50	18.78	17.85	16.79	15.80	14.92	14.09	13.35	12.65	12.01	11.41	10.85	10.35	9.87	9.41	8.99
						9.48	8.93	8.26	7.50	6.84	6.26	5.73	5.26	4.85	4.46	4.13	3.83	3.56	3.31	3.07	2.88
112DLH22	1.52	2845	28.54	28.54	983.10	21.86	21.16	20.31	19.28	18.24	17.24	16.30	15.43	14.62	13.90	13.20	12.55	11.97	11.41	10.87	10.39
						11.01	10.37	9.58	8.72	7.95	7.26	6.66	6.11	5.63	5.19	4.80	4.46	4.13	3.85	3.59	3.34
112DLH23	1.61	2845	31.45	31.45	1083.00	24.12	23.35	22.40	21.22	19.98	18.80	17.72	16.74	15.84	15.03	14.26	13.55	12.87	12.25	11.68	11.14
						11.52	10.85	10.04	9.12	8.33	7.61	6.97	6.40	5.89	5.44	5.03	4.67	4.33	4.02	3.75	3.48
112DLH24	1.91	2845	37.29	37.29	1284.00	28.54	27.64	26.53	25.21	23.80	22.46	21.23	20.13	19.08	18.11	17.20	16.39	15.62	14.87	14.18	13.55
						13.96	13.14	12.17	11.06	10.08	9.22	8.44	7.76	7.13	6.58	6.10	5.64	5.23	4.87	4.53	4.24
			<30480	30480-36576	36881-50292	50597	51816	53340	54864	56388	57912	59436	60960	62484	64008	65532	67056	68580	70104	71628	73152
120DLH20	1.12	3048	17.94	17.94	661.22	13.06	12.49	11.79	11.18	10.59	10.09	9.61	9.15	8.73	8.31	7.94	7.61	7.26	6.96	6.67	6.41
						6.27	5.83	5.35	4.93	4.53	4.18	3.86	3.59	3.32	3.09	2.88	2.69	2.51	2.34	2.20	2.07
120DLH21	1.34	3048	22.30	22.30	822.29	16.37	15.65	14.77	14.00	13.25	12.60	11.98	11.41	10.87	10.36	9.89	9.45	9.05	8.66	8.31	7.96
						7.73	7.20	6.59	6.07	5.58	5.15	4.75	4.42	4.10	3.82	3.56	3.31	3.09	2.90	2.71	2.55
120DLH22	1.52	3048	25.56	25.56	942.66	18.71	18.03	17.06	16.14	15.31	14.55	13.85	13.17	12.55	11.98	11.42	10.93	10.45	10.01	9.58	9.18
						8.98	8.37	7.67	7.04	6.49	5.99	5.54	5.13	4.77	4.43	4.13	3.86	3.60	3.37	3.16	2.97
120DLH23	1.62	3048	28.28	28.28	1043.00	20.64	19.86	18.78	17.79	16.89	16.04	15.27	14.52	13.83	13.17	12.58	11.99	11.47	10.96	10.50	10.06
						9.39	8.77	8.04	7.38	6.80	6.27	5.79	5.38	4.97	4.64	4.31	4.02	3.76	3.51	3.31	3.10
120DLH24	1.93	3048	33.53	33.53	1237.00	24.45	23.50	22.21	21.03	19.95	18.97	18.05	17.18	16.37	15.62	14.92	14.26	13.63	13.04	12.51	11.98
						11.39	10.62	9.73	8.94	8.24	7.60	7.03	6.52	6.04	5.63	5.23	4.88	4.56	4.27	4.01	3.76
120DLH25	2.22	3048	38.43	38.43	1417.00	28.10	26.96	25.51	24.16	22.93	21.78	20.70	19.70	18.78	17.92	17.11	16.37	15.66	14.97	14.35	13.76
						13.35	12.44	11.41	10.47	9.64	8.90	8.23	7.63	7.07	6.59	6.14	5.73	5.35	5.02	4.69	4.40

STANDARD ASD LOAD TABLE

DEEP LONGSPAN STEEL JOISTS, DLH-SERIES

Based on a 50 ksi (345 MPa) Maximum Yield Strength
Spans up to and including 144 ft. adopted by the Steel Joist Institute May 25, 1983
Spans greater than 144 ft. up to and including 240 ft. adopted by the Steel Joist Institute May 18, 2010
Revised to May 18, 2010 – Effective December 31, 2010

The **BLACK** figures in the Load Table give the TOTAL safe uniformly distributed load-carrying capacities, in pounds per linear foot (kiloNewtons per meter), of **ASD** DLH-Series Steel Joists.

The approximate joist weights, in pounds per linear foot (kiloNewtons per meter), given in the Load Table may be added to the other building weights to determine the DEAD load. In all cases the DEAD load, including the joist self-weight, must be deducted from the TOTAL load to determine the LIVE load. The approximate joist weights do not include accessories.

The **RED** figures in the Load Table represent the uniform load, in pounds per linear foot (kiloNewtons per meter), which will produce an approximate joist deflection of 1/360 of the span. This load can be linearly prorated to obtain the uniform load for supplementary deflection criteria (i.e. a uniform load which will produce a joist deflection of 1/240 of the span may be obtained by multiplying the **RED** figures by 360/240). In no case shall the prorated load exceed the TOTAL load-carrying capacity of the joist.

The Load Table applies to joists with either parallel chords or pitched top chords. Joists can have a top chord pitch up to 1/2 inch per foot (42 mm per meter). If the pitch exceeds this limit, the Load Table does not apply. When top chords are pitched, the load-carrying capacities are determined by the nominal depth of the joists at the center of the span. Sloped parallel-chord joists shall use span as defined by the length along the slope.

Where the joist span is in the **BLUE SHADED** area of the Load Table, all rows of bridging shall be diagonal bridging with bolted connections at chords and intersections. Hoisting cables shall not be released until the two rows of bridging nearest the third points are completely installed. The **BLUE SHADED** area starts after 60'–0" (18288 mm) and extends up through 100'–0" (30175 mm).

Where the joist span is in the **GRAY SHADED** area of the Load Table, all rows of bridging shall be diagonal bridging with bolted connections at chords and intersections. Hoisting cables shall not be released until all rows of bridging are completely installed. The **GRAY SHADED** area starts after 100'–0" (30175 mm) and extends up through 240'–0" (73152 mm).

The approximate gross moment of inertia (not adjusted for shear deformation) of a standard joist listed in the Load Table may be determined as follows:

$I_j = 26.767(W)(L^3)(10^{-6})$ in^4 or $2.6953(W)(L^3)(10^{-5})$ mm^4, where W= **RED** figure in the Load Table, and
L = (span – 0.33) in feet or (span – 102) in millimeters

Loads for span increments not explicitly given in the Load Table may be determined using linear interpolation between the load values given in adjacent span columns.

*The safe uniform load for the spans shown in the SAFE LOAD Column is equal to (SAFE LOAD) / (span). The TOTAL safe uniformly distributed load-carrying capacity, for spans less than those shown in the SAFE LOAD Column are given in the MAX LOAD Column.

To solve for a RED figure for spans shown in the SAFE LOAD Column (or lesser spans), multiply the RED figure of the shortest span shown in the Load Table by (the shortest span shown in the Load Table – 0.33 feet [101 mm])^2 and divide by (the actual span – 0.33 feet [101 mm])^2. In no case shall the calculated load exceed the TOTAL load-carrying capacity of the joist.

ASD

STANDARD LOAD TABLE LONGSPAN STEEL JOISTS, DLH-SERIES

Based on a 50 ksi Maximum Yield Strength - Loads Shown in Pounds per Linear Foot (plf)

Joist Designation	Approx. Wt in Lbs. Per Linear Ft (Joists only)	Depth in inches	Max Load plf	SAFE LOAD* in Lbs. Between		SPAN IN FEET														
			< 62	62-89		90	91	92	93	94	95	96	97	98	99	100	101	102	103	104
52DLH10	25	52	432	26800		298	291	285	279	273	267	261	256	251	246	241	236	231	227	223
						171	165	159	154	150	145	140	136	132	128	124	120	116	114	110
52DLH11	26	52	475	29420		327	320	313	306	299	293	287	281	275	270	264	259	254	249	244
						187	181	174	169	164	158	153	149	144	140	135	132	128	124	120
52DLH12	29	52	529	32820		365	357	349	342	334	327	320	314	307	301	295	289	284	278	273
						204	197	191	185	179	173	168	163	158	153	149	144	140	135	132
52DLH13	34	52	643	39840		443	433	424	414	406	397	389	381	373	366	358	351	344	338	331
						247	239	231	224	216	209	203	197	191	185	180	174	170	164	159
52DLH14	39	52	735	45580		507	497	486	476	466	457	447	438	430	421	413	405	397	390	382
						276	266	258	249	242	234	227	220	213	207	201	194	189	184	178
52DLH15	42	52	826	51200		569	557	545	533	522	511	500	490	480	470	461	451	443	434	426
						311	301	291	282	272	264	256	247	240	233	226	219	213	207	201
52DLH16	45	52	890	55200		614	601	588	575	563	551	540	528	518	507	497	487	478	468	459
						346	335	324	314	304	294	285	276	267	260	252	245	237	230	224
52DLH17	52	52	1025	63540		706	691	676	661	647	634	620	608	595	583	572	560	549	539	528
						395	381	369	357	346	335	324	315	304	296	286	279	270	263	255
			<67	67-97		98	99	100	101	102	103	104	105	106	107	108	109	110	111	112
56DLH11	26	56	421	28200		288	283	277	272	267	262	257	253	248	244	239	235	231	227	223
						169	163	158	153	149	145	140	136	133	129	125	122	118	115	113
56DLH12	30	56	484	32400		331	324	318	312	306	300	295	289	284	278	273	268	263	259	254
						184	178	173	168	163	158	153	150	145	141	137	133	130	126	123
56DLH13	34	56	586	39240		401	394	386	379	372	365	358	351	344	338	331	325	319	314	308
						223	216	209	204	197	191	186	181	175	171	166	161	157	152	149
56DLH14	39	56	662	44360		453	444	435	427	419	411	403	396	388	381	375	368	361	355	349
						249	242	234	228	221	214	209	202	196	190	186	181	175	171	167
56DLH15	42	56	756	50680		518	508	498	488	478	469	460	451	443	434	426	419	411	403	396
						281	272	264	256	248	242	234	228	221	215	209	204	198	192	188
56DLH16	46	56	816	54680		559	548	537	526	516	506	496	487	478	469	460	452	444	436	428
						313	304	294	285	277	269	262	254	247	240	233	227	221	214	209
56DLH17	51	56	941	63020		643	630	618	605	594	582	571	560	549	539	529	520	510	501	492
						356	345	335	325	316	306	298	289	281	273	266	258	251	245	238
			< 71	71-99	100-105	106	107	108	109	110	111	112	113	114	115	116	117	118	119	120
60DLH12	29	60	439	31200	31200	295	289	284	279	274	270	265	261	256	252	248	244	240	236	232
						168	163	158	154	150	146	142	138	134	131	128	124	121	118	115
60DLH13	35	60	534	37920	37920	358	351	345	339	333	327	322	316	311	306	301	296	291	286	282
						203	197	191	187	181	176	171	167	163	158	154	151	147	143	139
60DLH14	40	60	594	42140	42140	398	391	383	376	370	363	356	350	344	338	332	327	321	316	310
						216	210	205	199	193	189	183	178	173	170	165	161	156	152	149
60DLH15	43	60	697	49460	49460	467	458	450	442	434	427	419	412	405	398	392	385	379	373	367
						255	248	242	235	228	223	216	210	205	200	194	190	185	180	175
60DLH16	46	60	766	54380	54380	513	504	494	485	476	468	460	451	444	436	428	421	414	407	400
						285	277	269	262	255	247	241	235	228	223	217	211	206	201	196
60DLH17	52	60	880	62500	62500	590	579	569	558	548	538	529	519	510	501	493	484	476	468	460
						324	315	306	298	290	283	275	267	261	254	247	241	235	228	223
60DLH18	59	60	1016	72120	72120	681	668	656	644	632	621	610	599	589	578	568	559	549	540	531
						366	357	346	337	327	319	310	303	294	286	279	272	266	259	252
			<76	76-99	100-113	114	115	116	117	118	119	120	121	122	123	124	125	126	127	128
64DLH12	31	64	396	30080	30080	264	259	255	251	247	243	239	235	231	228	224	221	218	214	211
						153	150	146	142	138	135	132	129	125	122	119	116	114	111	109
64DLH13	34	64	480	36500	36500	321	315	310	305	300	295	291	286	281	277	273	269	264	260	257
						186	181	176	171	168	163	159	155	152	148	144	141	137	134	131
64DLH14	40	64	550	41820	41820	367	360	354	349	343	337	332	326	321	316	311	306	301	296	292
						199	193	189	184	179	174	171	166	162	158	154	151	147	143	140
64DLH15	43	64	631	47940	47940	421	414	407	400	394	387	381	375	369	363	358	352	347	341	336
						234	228	223	217	211	206	201	196	191	187	182	177	173	170	165
64DLH16	46	64	710	53960	53960	474	466	458	450	443	435	428	421	414	407	401	394	388	382	376
						262	254	248	242	235	229	224	218	213	208	203	198	193	189	184
64DLH17	52	64	818	62180	62180	546	536	527	518	509	501	492	484	476	468	461	454	446	439	432
						298	290	283	275	268	262	255	248	243	237	231	226	220	215	210
64DLH18	59	64	945	71800	71800	630	619	608	598	587	578	568	559	549	540	532	523	515	507	499
						337	328	320	311	304	296	288	282	274	267	261	255	249	243	237
			< 81	81-99	100-121	122	123	124	125	126	127	128	129	130	131	132	133	134	135	136
68DLH13	37	68	433	35100	35100	288	284	279	275	271	267	263	259	255	252	248	244	241	237	234
						171	168	164	159	155	152	149	145	142	138	135	133	130	127	124
68DLH14	40	68	499	40420	40420	332	327	322	317	312	308	303	299	294	290	286	281	277	273	269
						184	179	175	171	167	163	159	155	152	148	145	141	138	135	133
68DLH15	44	68	560	45320	45320	372	365	360	354	348	343	337	332	327	322	317	312	308	303	299
						206	201	196	191	187	182	178	174	170	166	162	158	155	152	148
68DLH16	49	68	663	53740	53740	441	433	427	420	413	407	400	394	388	382	376	371	365	360	354
						242	236	230	225	219	214	209	204	199	195	190	186	182	178	174
68DLH17	55	68	748	60560	60560	497	489	481	474	467	460	453	446	439	433	427	420	414	408	403
						275	268	262	256	249	244	238	232	228	222	217	212	208	203	198
68DLH18	61	68	865	70100	70100	575	566	557	549	540	532	524	516	508	501	493	486	479	472	465
						311	304	297	289	283	276	269	263	257	251	246	240	234	230	225
68DLH19	67	68	997	80720	80720	662	651	641	631	621	611	601	592	583	574	565	557	548	540	532
						353	344	336	328	320	313	305	298	291	285	278	272	266	260	254
			< 85	85-99	100-129	130	131	132	133	134	135	136	137	138	139	140	141	142	143	144
72DLH14	41	72	462	39300	39300	303	298	294	290	285	281	277	274	270	266	262	259	255	252	248
						171	167	163	159	155	152	149	146	143	139	136	133	131	128	125
72DLH15	44	72	530	45020	45020	347	342	336	331	326	322	317	312	308	303	299	295	291	286	282
						191	187	183	178	174	171	167	163	160	156	152	150	147	143	140
72DLH16	50	72	612	52040	52040	401	395	390	384	378	373	368	363	358	353	348	343	338	334	329
						225	219	214	209	205	200	196	191	188	183	179	175	171	169	165
72DLH17	56	72	689	58540	58540	451	445	438	432	426	420	414	408	402	397	391	386	381	376	371
						256	250	245	239	233	228	224	218	213	209	205	200	196	191	188
72DLH18	59	72	807	68580	68580	528	520	512	505	497	490	483	479	470	463	457	450	444	438	432
						289	283	276	270	265	258	252	247	242	236	231	227	222	217	212
72DLH19	70	72	946	80400	80400	619	609	600	591	582	573	565	557	549	541	533	526	518	511	504
						328	321	313	306	300	293	286	280	274	268	263	257	251	247	241

ASD

STANDARD LOAD TABLE LONGSPAN STEEL JOISTS, DLH-SERIES

Based on a 50 ksi Maximum Yield Strength - Loads Shown in Pounds per Linear Foot (plf)

Joist Designation	Approx. Wt in Lbs. Per Linear Ft (Joists only)	Depth in inches	Max Load plf	SAFE LOAD* in Lbs. Between		SPAN IN FEET															
			< 81	81-99	100-111	112	115	118	121	124	127	130	133	136	139	142	145	148	151	155	160
80DLH15	40	80	644	52160	52160	466	442	421	401	383	366	350	335	321	307	295	283	272	261	247	231
						321	296	275	255	236	220	205	192	179	167	157	147	139	130	120	109
80DLH16	46	80	774	62680	62680	560	535	509	485	461	439	419	400	383	366	350	336	322	309	293	275
						375	347	321	297	276	257	240	224	209	196	184	172	162	152	141	128
80DLH17	53	80	894	72420	72420	647	617	587	559	533	510	487	466	446	427	410	393	378	363	345	323
						451	416	386	358	332	309	288	269	252	235	221	207	195	183	169	154
80DLH18	60	80	1010	81840	81840	731	696	662	631	602	575	550	526	504	482	463	444	427	410	389	366
						516	477	441	409	380	354	330	308	288	270	253	237	223	210	194	176
80DLH19	67	80	1179	95480	95480	853	812	773	736	701	670	640	612	585	560	537	516	495	476	451	423
						578	533	493	458	425	396	369	344	322	301	283	266	250	235	217	197
80DLH20	75	80	1325	107320	107320	964	921	882	845	807	771	736	704	674	645	618	594	570	547	520	487
						646	596	552	512	475	443	412	385	360	337	316	297	279	263	243	220
			< 89	89-99	100-120	121	124	127	130	133	136	139	142	145	148	151	155	160	165	170	175
88DLH16	46	88	699	62180	62180	514	490	467	447	428	410	394	378	363	349	335	318	299	281	265	251
						361	336	313	291	272	254	238	223	210	197	186	172	156	143	130	119
88DLH17	51	88	790	70300	70300	581	553	526	502	479	458	439	420	403	386	371	352	330	310	292	274
						404	375	349	325	304	284	266	249	234	220	207	191	173	159	146	133
88DLH18	58	88	906	80620	80620	667	635	605	577	551	527	504	483	463	444	426	404	379	356	335	316
						460	427	397	370	346	323	303	284	267	250	236	218	199	181	165	152
88DLH19	65	88	1048	93260	93260	771	734	699	666	636	608	582	557	534	513	492	467	438	411	387	364
						521	484	450	420	392	367	343	322	302	284	267	248	225	205	187	172
88DLH20	76	88	1206	107300	107300	889	854	821	789	755	723	694	665	639	614	590	560	527	495	467	440
						623	579	539	502	469	438	410	385	361	340	320	296	269	246	224	206
88DLH21	89	88	1487	132340	132340	1099	1045	996	950	907	867	829	794	762	731	702	666	624	586	551	519
						724	673	626	584	545	509	477	447	420	395	372	344	313	285	261	239
			< 97	97-99	100-129	130	133	136	139	142	145	148	151	155	160	165	170	175	180	185	190
96DLH17	52	96	724	70180	70180	540	517	496	474	456	438	421	405	385	362	339	320	302	284	269	255
						389	363	339	318	298	280	263	247	229	208	190	173	159	146	134	124
96DLH18	58	96	814	79000	79000	608	583	559	535	513	493	475	457	435	410	386	364	344	326	308	292
						443	413	386	362	340	319	300	282	261	237	216	198	181	166	153	141
96DLH19	66	96	974	94440	94440	727	697	667	638	611	585	561	539	512	480	451	424	401	378	357	338
						502	469	438	410	385	361	340	320	296	269	246	224	206	189	174	161
96DLH20	74	96	1096	106280	106280	824	789	754	722	691	662	635	610	579	543	510	481	453	428	405	382
						569	531	496	465	436	409	385	362	336	305	277	254	233	214	196	181
96DLH21	90	96	1375	133340	133340	1027	982	940	900	864	829	797	766	728	684	643	605	571	539	510	482
						698	652	610	571	535	503	473	445	412	374	341	312	286	263	242	224
96DLH22	102	96	1540	149380	149380	1150	1108	1067	1028	991	957	921	886	843	792	745	702	664	627	594	562
						811	757	708	663	622	584	549	517	479	435	396	362	332	305	281	259
			< 100	100-104	105-138	139	142	145	148	151	155	160	165	170	175	180	185	190	195	200	205
104DLH18	59	104	733	733	76980	554	532	512	489	472	450	423	400	378	358	339	321	305	290	276	263
						426	400	375	353	332	307	279	255	233	213	195	180	167	154	142	132
104DLH19	67	104	892	892	93620	674	647	622	598	574	546	513	485	457	432	409	387	368	350	332	315
						484	453	426	401	377	349	317	289	265	242	222	204	189	175	162	150
104DLH20	75	104	1002	1002	105260	764	738	714	688	661	629	591	555	522	493	465	440	417	395	375	357
						548	513	483	453	427	395	359	327	299	274	251	232	214	198	184	170
104DLH21	90	104	1260	1260	132320	956	917	881	847	813	773	727	685	647	611	578	547	519	493	469	446
						673	632	593	558	525	486	442	403	368	337	307	284	263	244	226	209
104DLH22	104	104	1413	1413	148360	1071	1034	999	966	934	893	841	792	747	706	668	633	600	570	542	516
						783	734	689	648	610	564	513	468	428	392	359	331	306	283	262	244
104DLH23	109	104	1556	1556	163400	1181	1141	1096	1052	1009	956	899	845	795	750	708	670	635	602	571	543
						819	768	721	678	638	590	536	489	447	410	377	347	320	296	274	254
			< 100	100-112	113-147	148	151	155	160	165	170	175	180	185	190	195	200	205	210	215	220
112DLH19	67	112	815	815	92100	623	600	571	537	506	478	451	428	406	386	366	348	332	317	303	289
						466	439	406	369	336	308	281	259	238	220	203	189	175	162	151	142
112DLH20	76	112	922	922	104240	710	688	657	618	582	549	520	493	468	445	422	402	383	365	348	333
						528	497	459	418	381	348	319	293	270	249	231	213	198	184	171	160
112DLH21	91	112	1162	1162	131300	891	858	816	767	722	681	644	610	578	549	521	496	473	450	430	411
						650	612	566	514	469	429	393	361	333	306	283	263	244	227	211	198
112DLH22	104	112	1304	1304	147340	999	967	928	880	833	787	744	705	668	635	602	574	546	521	497	474
						755	711	657	598	545	498	457	419	386	356	329	306	283	264	246	229
112DLH23	110	112	1437	1437	162360	1102	1067	1023	970	913	859	810	765	724	686	651	618	588	560	533	509
						790	744	688	625	571	522	478	439	404	373	345	320	297	276	257	239
112DLH24	131	112	1703	1703	192440	1304	1263	1212	1151	1087	1026	970	919	871	828	786	748	713	680	648	619
						957	901	834	758	691	632	579	532	489	451	418	387	359	334	311	291
			< 100	100-120	121-165	166	170	175	180	185	190	195	200	205	210	215	220	225	230	235	240
120DLH20	77	120	819	819	99100	597	571	538	510	484	461	438	418	399	380	362	347	332	318	305	292
						430	400	367	338	311	287	265	246	228	212	198	185	172	161	151	142
120DLH21	92	120	1019	1019	123240	748	714	675	639	606	576	548	521	497	474	452	432	414	396	379	363
						530	494	452	416	383	353	326	303	281	262	244	227	212	199	186	175
120DLH22	104	120	1168	1168	141280	855	823	779	737	699	665	632	602	574	547	522	499	477	457	438	420
						616	574	526	483	445	411	380	352	327	304	283	265	247	231	217	204
120DLH23	111	120	1292	1292	156320	943	907	858	813	771	733	697	664	632	602	574	548	524	501	479	459
						644	601	551	506	466	430	397	369	341	318	296	276	258	241	227	213
120DLH24	132	120	1532	1532	185380	1117	1073	1015	961	912	867	824	785	748	713	681	651	623	596	571	548
						781	728	667	613	565	521	482	447	414	386	359	335	313	293	275	258
120DLH25	152	120	1756	1756	212420	1284	1231	1165	1104	1047	994	946	900	858	819	782	748	715	684	656	628
						915	853	782	718	661	610	564	523	485	452	421	393	367	344	322	302

ASD

METRIC LOAD TABLE LONGSPAN STEEL JOISTS, DLH-SERIES

Based on 345 MPa Maximum Yield Strength - Loads Shown in Kilonewtons per Meter (kN/m)

Joist Designation	Approx. Wt in kN Per Meter (Joists only)	Depth in mm	Max Load kN/m	SAFE LOAD* in kN Between		SPAN IN MILLIMETERS														
			<18898	18898-27127		27432	27737	28042	28346	28651	28956	29261	29566	29870	30175	30480	30785	31090	31394	31699
52DLH10	0.36	1321	6.30	119.2		4.34	4.24	4.15	4.07	3.98	3.89	3.80	3.73	3.66	3.59	3.51	3.44	3.37	3.31	3.25
						2.49	2.4	2.32	2.24	2.18	2.11	2.04	1.98	1.92	1.86	1.80	1.75	1.69	1.66	1.60
52DLH11	0.38	1321	6.93	130.8		4.77	4.67	4.56	4.46	4.36	4.27	4.18	4.10	4.01	3.94	3.85	3.77	3.70	3.63	3.56
						2.72	2.64	2.53	2.46	2.39	2.30	2.23	2.17	2.10	2.04	1.97	1.92	1.86	1.80	1.75
52DLH12	0.42	1321	7.72	145.9		5.32	5.21	5.09	4.99	4.87	4.77	4.67	4.58	4.48	4.39	4.30	4.21	4.14	4.05	3.98
						2.97	2.87	2.78	2.69	2.61	2.52	2.45	2.37	2.30	2.23	2.17	2.10	2.04	1.97	1.92
52DLH13	0.50	1321	9.38	177.2		6.46	6.31	6.18	6.04	5.92	5.79	5.67	5.56	5.44	5.34	5.22	5.12	5.02	4.93	4.83
						3.60	3.48	3.37	3.26	3.15	3.05	2.96	2.87	2.78	2.69	2.62	2.53	2.48	2.39	2.32
52DLH14	0.57	1321	10.73	202.7		7.39	7.25	7.09	6.94	6.80	6.66	6.52	6.39	6.27	6.14	6.02	5.91	5.79	5.69	5.57
						4.02	3.88	3.76	3.63	3.53	3.41	3.31	3.21	3.10	3.02	2.93	2.83	2.75	2.68	2.59
52DLH15	0.61	1321	12.05	227.7		8.30	8.12	7.95	7.77	7.61	7.45	7.29	7.15	7.00	6.85	6.72	6.58	6.46	6.33	6.21
						4.53	4.39	4.24	4.11	3.96	3.85	3.73	3.60	3.50	3.40	3.29	3.19	3.10	3.02	2.93
52DLH16	0.66	1321	12.99	245.5		8.96	8.77	8.58	8.39	8.21	8.04	7.88	7.70	7.55	7.39	7.25	7.10	6.97	6.82	6.69
						5.04	4.88	4.72	4.58	4.43	4.29	4.15	4.02	3.89	3.79	3.67	3.57	3.45	3.35	3.26
52DLH17	0.76	1321	14.96	282.6		10.30	10.08	9.86	9.64	9.44	9.25	9.04	8.87	8.68	8.50	8.34	8.17	8.01	7.86	7.70
						5.76	5.56	5.38	5.21	5.04	4.88	4.72	4.59	4.43	4.31	4.17	4.07	3.94	3.83	3.72
			<20422	20422-29566		29870	30175	30480	30785	31090	31394	31699	32004	32309	32614	32918	33223	33528	33833	34138
56DLH11	0.38	1422	6.14	125.4		4.20	4.13	4.04	3.96	3.89	3.82	3.75	3.69	3.61	3.56	3.48	3.42	3.37	3.31	3.25
						2.46	2.37	2.30	2.23	2.17	2.11	2.04	1.98	1.94	1.88	1.82	1.78	1.72	1.67	1.64
56DLH12	0.44	1422	7.06	144.1		4.83	4.72	4.64	4.55	4.46	4.37	4.30	4.21	4.14	4.05	3.98	3.91	3.83	3.77	3.70
						2.68	2.59	2.52	2.45	2.37	2.30	2.23	2.18	2.11	2.05	1.99	1.94	1.89	1.83	1.79
56DLH13	0.50	1422	8.55	174.5		5.85	5.74	5.63	5.53	5.42	5.32	5.22	5.12	5.02	4.93	4.83	4.74	4.65	4.58	4.49
						3.25	3.15	3.05	2.97	2.87	2.78	2.71	2.64	2.55	2.49	2.42	2.34	2.29	2.21	2.17
56DLH14	0.57	1422	9.66	197.3		6.61	6.47	6.34	6.23	6.11	5.99	5.88	5.77	5.66	5.56	5.47	5.37	5.26	5.18	5.09
						3.63	3.53	3.41	3.32	3.22	3.12	3.05	2.94	2.86	2.77	2.71	2.64	2.55	2.49	2.43
56DLH15	0.61	1422	11.03	225.4		7.55	7.41	7.26	7.12	6.97	6.84	6.71	6.58	6.46	6.33	6.21	6.11	5.99	5.88	5.77
						4.10	3.96	3.85	3.73	3.61	3.53	3.41	3.32	3.22	3.13	3.05	2.97	2.88	2.80	2.74
56DLH16	0.67	1422	11.91	243.2		8.15	7.99	7.83	7.67	7.53	7.38	7.23	7.10	6.97	6.84	6.71	6.59	6.47	6.36	6.24
						4.56	4.43	4.29	4.15	4.04	3.92	3.82	3.70	3.60	3.50	3.40	3.31	3.22	3.12	3.05
56DLH17	0.74	1422	13.73	280.3		9.38	9.19	9.01	8.82	8.66	8.49	8.33	8.17	8.01	7.86	7.72	7.58	7.44	7.31	7.18
						5.19	5.03	4.88	4.74	4.61	4.46	4.34	4.21	4.10	3.98	3.88	3.76	3.66	3.57	3.47
			<21641	21641-30175	30480-32004	32309	32614	32918	33223	33528	33833	34138	34442	34747	35052	35357	35662	35966	36271	36576
60DLH12	0.42	1524	6.41	138.7	138.7	4.30	4.21	4.14	4.07	3.99	3.94	3.86	3.80	3.73	3.67	3.61	3.56	3.50	3.44	3.38
						2.45	2.37	2.30	2.24	2.18	2.13	2.07	2.01	1.95	1.91	1.86	1.80	1.76	1.72	1.67
60DLH13	0.51	1524	7.79	168.6	168.6	5.22	5.12	5.03	4.94	4.85	4.77	4.69	4.61	4.53	4.46	4.39	4.31	4.24	4.17	4.11
						2.96	2.87	2.78	2.72	2.64	2.56	2.49	2.43	2.37	2.30	2.24	2.20	2.14	2.08	2.02
60DLH14	0.58	1524	8.67	187.4	187.4	5.80	5.70	5.58	5.48	5.39	5.29	5.19	5.10	5.02	4.93	4.84	4.77	4.68	4.61	4.52
						3.15	3.06	2.99	2.90	2.81	2.75	2.67	2.59	2.52	2.48	2.40	2.34	2.27	2.21	2.17
60DLH15	0.63	1524	10.17	220.0	220.0	6.81	6.68	6.56	6.45	6.33	6.23	6.11	6.01	5.91	5.80	5.72	5.61	5.53	5.44	5.35
						3.72	3.61	3.53	3.42	3.32	3.25	3.15	3.06	2.99	2.91	2.83	2.77	2.69	2.62	2.55
60DLH16	0.67	1524	11.18	241.8	241.8	7.48	7.35	7.20	7.07	6.94	6.82	6.71	6.58	6.47	6.36	6.24	6.14	6.04	5.93	5.83
						4.15	4.04	3.92	3.82	3.72	3.60	3.51	3.42	3.32	3.25	3.16	3.07	3.00	2.93	2.86
60DLH17	0.76	1524	12.84	278.0	278.0	8.61	8.44	8.30	8.14	7.99	7.85	7.72	7.57	7.44	7.31	7.19	7.06	6.94	6.82	6.71
						4.72	4.59	4.46	4.34	4.23	4.13	4.01	3.89	3.80	3.70	3.60	3.51	3.42	3.32	3.25
60DLH18	0.86	1524	14.83	320.8	320.8	9.93	9.74	9.57	9.39	9.22	9.06	8.90	8.74	8.59	8.43	8.28	8.15	8.01	7.88	7.74
						5.34	5.21	5.04	4.91	4.77	4.65	4.52	4.42	4.29	4.17	4.07	3.96	3.88	3.77	3.67
			<23165	23165-30175	30480-34442	34747	35052	35357	35662	35966	36271	36576	36881	37186	37490	37795	38100	38405	38710	39014
64DLH12	0.45	1626	5.78	133.8	133.8	3.85	3.77	3.72	3.66	3.60	3.54	3.48	3.42	3.37	3.32	3.26	3.22	3.18	3.12	3.07
						2.23	2.18	2.13	2.07	2.01	1.97	1.92	1.88	1.82	1.78	1.73	1.69	1.66	1.61	1.59
64DLH13	0.50	1626	7.01	162.3	162.3	4.68	4.59	4.52	4.45	4.37	4.30	4.24	4.17	4.10	4.04	3.98	3.92	3.85	3.79	3.75
						2.71	2.64	2.56	2.49	2.45	2.37	2.32	2.26	2.21	2.15	2.10	2.05	1.99	1.95	1.91
64DLH14	0.58	1626	8.03	186.0	186.0	5.35	5.25	5.16	5.09	5.00	4.91	4.84	4.75	4.68	4.61	4.53	4.46	4.39	4.31	4.26
						2.90	2.81	2.75	2.68	2.61	2.53	2.49	2.42	2.36	2.30	2.24	2.20	2.14	2.08	2.04
64DLH15	0.63	1626	9.21	213.2	213.2	6.14	6.04	5.93	5.83	5.74	5.64	5.56	5.47	5.38	5.29	5.22	5.13	5.06	4.97	4.90
						3.41	3.32	3.25	3.16	3.07	3.00	2.93	2.86	2.78	2.72	2.65	2.58	2.52	2.48	2.40
64DLH16	0.67	1626	10.36	240.0	240.0	6.91	6.80	6.68	6.56	6.46	6.34	6.24	6.14	6.04	5.93	5.85	5.74	5.66	5.57	5.48
						3.82	3.70	3.61	3.53	3.42	3.34	3.26	3.18	3.10	3.03	2.96	2.88	2.81	2.75	2.68
64DLH17	0.76	1626	11.94	276.5	276.5	7.96	7.82	7.69	7.55	7.42	7.31	7.18	7.06	6.94	6.82	6.72	6.62	6.50	6.40	6.30
						4.34	4.23	4.13	4.01	3.91	3.82	3.72	3.61	3.54	3.45	3.37	3.29	3.21	3.13	3.06
64DLH18	0.86	1626	13.79	319.3	319.3	9.19	9.03	8.87	8.72	8.56	8.43	8.28	8.15	8.01	7.88	7.76	7.63	7.51	7.39	7.28
						4.91	4.78	4.67	4.53	4.43	4.31	4.20	4.11	3.99	3.89	3.80	3.72	3.63	3.54	3.45
			<24689	24689-30175	30480-38881	37186	37490	37795	38100	38405	38710	39014	39319	39624	39929	40234	40538	40843	41148	41453
68DLH13	0.54	1727	6.32	156.1	156.1	4.20	4.14	4.07	4.01	3.95	3.89	3.83	3.77	3.72	3.67	3.61	3.56	3.51	3.45	3.41
						2.49	2.45	2.39	2.32	2.26	2.21	2.17	2.11	2.07	2.01	1.97	1.94	1.89	1.85	1.80
68DLH14	0.58	1727	7.28	179.7	179.7	4.84	4.77	4.69	4.62	4.55	4.49	4.42	4.36	4.29	4.23	4.17	4.10	4.04	3.98	3.92
						2.68	2.61	2.55	2.49	2.43	2.37	2.32	2.26	2.21	2.15	2.11	2.05	2.01	1.97	1.94
68DLH15	0.64	1727	8.17	201.5	201.5	5.42	5.32	5.25	5.16	5.07	5.00	4.91	4.84	4.77	4.69	4.62	4.55	4.49	4.42	4.36
						3.00	2.93	2.86	2.78	2.72	2.65	2.59	2.53	2.48	2.42	2.36	2.30	2.26	2.21	2.15
68DLH16	0.72	1727	9.68	239.0	239.0	6.43	6.31	6.23	6.12	6.02	5.93	5.83	5.74	5.66	5.57	5.48	5.41	5.32	5.25	5.16
						3.53	3.44	3.35	3.28	3.19	3.12	3.05	2.97	2.90	2.84	2.77	2.71	2.65	2.59	2.53
68DLH17	0.80	1727	10.92	269.3	269.3	7.25	7.13	7.01	6.91	6.81	6.71	6.61	6.50	6.40	6.31	6.23	6.12	6.04	5.95	5.88
						4.01	3.91	3.82	3.73	3.63	3.56	3.47	3.38	3.32	3.23	3.16	3.09	3.03	2.96	2.88
68DLH18	0.89	1727	12.62	311.8	311.8	8.39	8.26	8.12	8.01	7.88	7.76	7.64	7.53	7.41	7.31	7.19	7.09	6.99	6.88	6.78
						4.53	4.43	4.33	4.21	4.13	4.02	3.92	3.83	3.75	3.66	3.59	3.50	3.41	3.35	3.28
68DLH19	0.98	1727	14.55	359.0	359.0	9.66	9.50	9.35	9.20	9.06	8.91	8.77	8.63	8.50	8.37	8.24	8.12	7.99	7.88	7.76
						5.15	5.02	4.90	4.78	4.67	4.56	4.45	4.34	4.24	4.15	4.05	3.96	3.88	3.79	3.70
			<25908	25908-30175	30480-39219	39624	39929	40234	40538	40843	41148	41453	41758	42062	42367	42672	42977	43282	43586	43891
72DLH14	0.60	1829	6.74	174.8	174.8	4.42	4.34	4.29	4.23	4.15	4.10	4.04	3.99	3.94	3.88	3.82	3.77	3.72	3.67	3.61
						2.49	2.43	2.37	2.32	2.26	2.21	2.17	2.13	2.08	2.02	1.98	1.94	1.91	1.86	1.82
72DLH15	0.64	1829	7.73	200.2	200.2	5.06	4.99	4.90	4.83	4.75	4.69	4.62	4.55	4.49	4.42	4.36	4.30	4.24	4.17	4.11
						2.78	2.72	2.67	2.59	2.53	2.49	2.43	2.37	2.33	2.27	2.21	2.18	2.14	2.08	2.04
72DLH16	0.73	1829	8.93	231.4	231.4	5.85	5.76	5.69	5.60	5.51	5.44	5.37	5.29	5.22	5.15	5.07	5.00	4.93	4.87	4.80
						3.28	3.19	3.12	3.05	2.99	2.91	2.86	2.78	2.74	2.67	2.61	2.55	2.49	2.46	2.40
72DLH17	0.82	1829	10.06	260.3	260.3	6.58	6.49	6.39	6.30	6.21	6.12	6.04	5.95	5.86	5.79	5.70	5.63	5.56	5.48	5.41
						3.73	3.64	3.57	3.48	3.40	3.32	3.26	3.18	3.10	3.05	2.99	2.91	2.86	2.78	2.74
72DLH18	0.86	1829	11.78	305.0	305.0	7.70	7.58	7.47	7.36	7.25	7.15	7.04	6.99	6.85	6.75	6.66	6.56	6.47	6.39	6.30
						4.21	4.13	4.02	3.94	3.86	3.76	3.67	3.60	3.53	3.44	3.37	3.31	3.23	3.16	3.09
72DLH19	1.02	1829	13.81	357.6	357.6	9.03	8.88	8.75	8.62	8.49	8.36	8.24	8.12	8.01	7.89	7.77	7.67	7.55	7.45	7.35
						4.78	4.68	4.56	4.46	4.37	4.27	4.17	4.08	3.99	3.91	3.83	3.75	3.66	3.60	3.51

ASD

METRIC LOAD TABLE LONGSPAN STEEL JOISTS, DLH-SERIES

Based on 345 MPa Maximum Yield Strength - Loads Shown in Kilonewtons per Meter (kN/m)

Joist Designation	Approx. Wt in kN Per Meter (Joists only)	Depth in mm	Max Load kN/m	SAFE LOAD* in kN Between		SPAN IN MILLIMETERS															
			<24689	24689-30175	30480-33833	34138	35052	35966	36881	37795	38710	39624	40538	41453	42367	43282	44196	45110	46025	47244	48768
80DLH15	0.58	2032	9.40	232.0	232.0	6.80	6.45	6.14	5.85	5.58	5.34	5.10	4.88	4.68	4.48	4.30	4.13	3.96	3.80	3.60	3.37
						4.68	4.31	4.01	3.72	3.44	3.21	2.99	2.80	2.61	2.43	2.29	2.14	2.02	1.89	1.75	1.59
80DLH16	0.67	2032	11.3	278.8	278.8	8.17	7.80	7.42	7.07	6.72	6.40	6.11	5.83	5.58	5.34	5.10	4.90	4.69	4.50	4.27	4.01
						5.47	5.06	4.68	4.33	4.02	3.75	3.50	3.26	3.05	2.86	2.68	2.51	2.36	2.21	2.05	1.86
80DLH17	0.77	2032	13.05	322.1	322.1	9.44	9.00	8.56	8.15	7.77	7.44	7.10	6.80	6.50	6.23	5.98	5.73	5.51	5.29	5.03	4.71
						6.58	6.07	5.63	5.22	4.84	4.50	4.20	3.92	3.67	3.42	3.22	3.02	2.84	2.67	2.46	2.24
80DLH18	0.88	2032	14.74	364.0	364.0	10.66	10.15	9.66	9.20	8.78	8.39	8.02	7.67	7.35	7.03	6.75	6.47	6.23	5.98	5.67	5.34
						7.53	6.96	6.43	5.96	5.54	5.16	4.81	4.49	4.20	3.94	3.69	3.45	3.25	3.06	2.83	2.56
80DLH19	0.98	2032	17.21	424.7	424.7	12.44	11.85	11.28	10.74	10.23	9.77	9.34	8.93	8.53	8.17	7.83	7.53	7.22	6.94	6.58	6.17
						8.43	7.77	7.19	6.68	6.20	5.77	5.38	5.02	4.69	4.39	4.13	3.88	3.64	3.42	3.16	2.87
80DLH20	1.09	2032	19.34	477.3	477.3	14.06	13.44	12.87	12.33	11.77	11.25	10.74	10.27	9.83	9.41	9.01	8.66	8.31	7.98	7.58	7.10
						9.42	8.69	8.05	7.47	6.93	6.46	6.01	5.61	5.25	4.91	4.61	4.33	4.07	3.83	3.54	3.21
			<27127	27127-30175	30480-36576	36881	37795	38710	39624	40538	41453	42367	43282	44196	45110	46025	47244	48768	50292	51816	53340
88DLH16	0.67	2235	10.20	276.5	276.5	7.50	7.15	6.81	6.52	6.24	5.98	5.74	5.51	5.29	5.09	4.88	4.64	4.36	4.10	3.86	3.66
						5.26	4.90	4.56	4.24	3.96	3.70	3.47	3.25	3.06	2.87	2.71	2.51	2.27	2.08	1.89	1.73
88DLH17	0.74	2235	11.53	312.7	312.7	8.47	8.07	7.67	7.32	6.99	6.68	6.40	6.12	5.88	5.63	5.41	5.13	4.81	4.52	4.26	3.99
						5.89	5.47	5.09	4.74	4.43	4.14	3.88	3.63	3.41	3.21	3.02	2.78	2.52	2.32	2.13	1.94
88DLH18	0.85	2235	13.22	358.6	358.6	9.73	9.26	8.82	8.42	8.04	7.69	7.35	7.04	6.75	6.47	6.21	5.89	5.53	5.19	4.88	4.61
						6.71	6.23	5.79	5.39	5.04	4.71	4.42	4.14	3.89	3.64	3.44	3.18	2.90	2.64	2.40	2.21
88DLH19	0.95	2235	15.29	414.8	414.8	11.25	10.71	10.20	9.71	9.28	8.87	8.49	8.12	7.79	7.48	7.18	6.81	6.39	5.99	5.64	5.31
						7.60	7.06	6.56	6.12	5.72	5.35	5.00	4.69	4.40	4.14	3.89	3.61	3.28	2.99	2.72	2.51
88DLH20	1.11	2235	17.60	477.2	477.2	12.97	12.46	11.98	11.51	11.01	10.55	10.12	9.70	9.32	8.96	8.61	8.17	7.69	7.22	6.81	6.42
						9.09	8.44	7.86	7.32	6.84	6.39	5.98	5.61	5.26	4.96	4.67	4.31	3.92	3.59	3.26	3.00
88DLH21	1.30	2235	21.70	588.3	588.3	16.03	15.25	14.53	13.86	13.23	12.65	12.09	11.58	11.12	10.66	10.24	9.71	9.10	8.55	8.04	7.57
						10.56	9.82	9.13	8.52	7.95	7.42	6.96	6.52	6.12	5.76	5.42	5.02	4.56	4.15	3.80	3.48
			<29566	29566-30175	30480-39319	39624	40538	41453	42367	43282	44196	45110	46025	47244	48768	50292	51816	53340	54864	56388	57912
96DLH17	0.76	2438	10.57	312.1	312.1	7.88	7.54	7.23	6.91	6.65	6.39	6.14	5.91	5.61	5.28	4.94	4.67	4.40	4.14	3.92	3.72
						5.67	5.29	4.94	4.64	4.34	4.08	3.83	3.60	3.34	3.03	2.77	2.52	2.32	2.13	1.95	1.80
96DLH18	0.85	2438	11.88	351.4	351.4	8.87	8.50	8.15	7.80	7.48	7.19	6.93	6.66	6.34	5.98	5.63	5.31	5.02	4.75	4.49	4.26
						6.46	6.02	5.63	5.28	4.96	4.65	4.37	4.11	3.80	3.45	3.15	2.88	2.64	2.42	2.23	2.05
96DLH19	0.96	2438	14.21	420.0	420.0	10.60	10.17	9.73	9.31	8.91	8.53	8.18	7.86	7.47	7.00	6.58	6.18	5.85	5.51	5.21	4.93
						7.32	6.84	6.39	5.98	5.61	5.26	4.96	4.67	4.31	3.92	3.59	3.26	3.00	2.75	2.53	2.34
96DLH20	1.08	2438	15.99	472.7	472.7	12.02	11.51	11.00	10.53	10.08	9.66	9.26	8.90	8.44	7.92	7.44	7.01	6.61	6.24	5.91	5.57
						8.30	7.74	7.23	6.78	6.36	5.96	5.61	5.28	4.90	4.45	4.04	3.70	3.40	3.12	2.86	2.64
96DLH21	1.31	2438	20.07	593.1	593.1	14.98	14.33	13.71	13.13	12.60	12.09	11.63	11.17	10.62	9.98	9.38	8.82	8.33	7.86	7.44	7.03
						10.18	9.51	8.90	8.33	7.80	7.34	6.90	6.49	6.01	5.45	4.97	4.55	4.17	3.83	3.53	3.26
96DLH22	1.49	2438	22.47	664.4	664.4	16.78	16.17	15.57	15.00	14.46	13.96	13.44	12.93	12.30	11.55	10.87	10.24	9.69	9.15	8.66	8.20
						11.83	11.04	10.33	9.67	9.07	8.52	8.01	7.54	6.99	6.34	5.77	5.28	4.84	4.45	4.10	3.77
			<30480	30480-31699	32004-42062	42367	43282	44196	45110	46025	47244	48768	50292	51816	53340	54864	56388	57912	59436	60960	62484
104DLH18	0.86	2642	10.70	10.70	342.4	8.08	7.76	7.47	7.13	6.88	6.56	6.17	5.83	5.51	5.22	4.94	4.68	4.45	4.23	4.02	3.83
						6.21	5.83	5.47	5.15	4.84	4.48	4.07	3.72	3.40	3.10	2.84	2.62	2.43	2.24	2.07	1.92
104DLH19	0.98	2642	13.02	13.02	416.4	9.83	9.44	9.07	8.72	8.37	7.96	7.48	7.07	6.66	6.30	5.96	5.64	5.37	5.10	4.84	4.59
						7.06	6.61	6.21	5.85	5.50	5.09	4.62	4.21	3.86	3.53	3.23	2.97	2.75	2.55	2.36	2.18
104DLH20	1.09	2642	14.62	14.62	468.2	11.14	10.77	10.42	10.04	9.64	9.17	8.62	8.09	7.61	7.19	6.78	6.42	6.08	5.76	5.47	5.21
						7.99	7.48	7.04	6.61	6.23	5.76	5.23	4.77	4.36	3.99	3.66	3.38	3.12	2.88	2.68	2.48
104DLH21	1.31	2642	18.39	18.39	588.5	13.95	13.38	12.85	12.36	11.86	11.28	10.60	9.99	9.44	8.91	8.43	7.98	7.57	7.19	6.84	6.50
						9.82	9.22	8.65	8.14	7.66	7.09	6.45	5.88	5.37	4.91	4.48	4.14	3.83	3.56	3.29	3.05
104DLH22	1.52	2642	20.62	20.62	659.9	15.63	15.09	14.57	14.09	13.63	13.03	12.27	11.55	10.90	10.30	9.74	9.23	8.75	8.31	7.90	7.53
						11.42	10.71	10.05	9.45	8.90	8.23	7.48	6.82	6.24	5.72	5.23	4.83	4.46	4.13	3.82	3.56
104DLH23	1.59	2642	22.71	22.71	726.8	17.23	16.65	15.99	15.35	14.72	13.95	13.11	12.33	11.60	10.94	10.33	9.77	9.26	8.78	8.33	7.92
						11.95	11.20	10.52	9.89	9.31	8.61	7.82	7.13	6.52	5.98	5.50	5.06	4.67	4.31	3.99	3.70
			<30480	30480-34138	34442-44806	45110	46025	47244	48768	50292	51816	53340	54864	56388	57912	59436	60960	62484	64008	65532	67056
112DLH19	0.98	2845	11.89	11.89	409.6	9.09	8.75	8.33	7.83	7.38	6.97	6.58	6.24	5.92	5.63	5.34	5.07	4.84	4.62	4.42	4.21
						6.80	6.40	5.92	5.38	4.90	4.49	4.10	3.77	3.47	3.21	2.96	2.75	2.55	2.36	2.20	2.07
112DLH20	1.11	2845	13.46	13.46	463.6	10.36	10.04	9.58	9.01	8.49	8.01	7.58	7.19	6.82	6.49	6.15	5.86	5.58	5.32	5.07	4.85
						7.70	7.25	6.69	6.10	5.56	5.07	4.65	4.27	3.94	3.63	3.37	3.10	2.88	2.68	2.49	2.33
112DLH21	1.33	2845	16.96	16.96	584.0	13.00	12.52	11.90	11.19	10.53	9.93	9.39	8.90	8.43	8.01	7.60	7.23	6.90	6.56	6.27	5.99
						9.48	8.93	8.26	7.50	6.84	6.26	5.73	5.26	4.85	4.46	4.13	3.83	3.56	3.31	3.07	2.88
112DLH22	1.52	2845	19.03	19.03	655.4	14.57	14.11	13.54	12.84	12.15	11.48	10.85	10.28	9.74	9.26	8.78	8.37	7.96	7.60	7.25	6.91
						11.01	10.37	9.58	8.72	7.95	7.26	6.66	6.11	5.63	5.19	4.80	4.46	4.13	3.85	3.59	3.34
112DLH23	1.61	2845	20.97	20.97	722.2	16.08	15.57	14.92	14.15	13.32	12.53	11.82	11.16	10.56	10.01	9.50	9.01	8.58	8.17	7.77	7.42
						11.52	10.85	10.04	9.12	8.33	7.61	6.97	6.40	5.89	5.44	5.03	4.67	4.33	4.02	3.75	3.48
112DLH24	1.91	2845	24.85	24.85	856.0	19.03	18.43	17.68	16.79	15.86	14.97	14.15	13.41	12.71	12.08	11.47	10.91	10.40	9.92	9.45	9.03
						13.96	13.14	12.17	11.06	10.08	9.22	8.44	7.76	7.13	6.58	6.10	5.64	5.23	4.87	4.53	4.24
			<30480	30480-36576	36881-50292	50597	51816	53340	54864	56388	57912	59436	60960	62484	64008	65532	67056	68580	70104	71628	73152
120DLH20	1.12	3048	11.95	11.95	440.8	8.71	8.33	7.85	7.44	7.06	6.72	6.39	6.10	5.82	5.54	5.28	5.06	4.84	4.64	4.45	4.26
						6.27	5.83	5.35	4.93	4.53	4.18	3.86	3.59	3.32	3.09	2.88	2.69	2.51	2.34	2.20	2.07
120DLH21	1.34	3048	14.87	14.87	548.1	10.91	10.42	9.85	9.32	8.84	8.40	7.99	7.60	7.25	6.91	6.59	6.30	6.04	5.77	5.53	5.29
						7.73	7.20	6.59	6.07	5.58	5.15	4.75	4.42	4.10	3.82	3.56	3.31	3.09	2.90	2.71	2.55
120DLH22	1.52	3048	17.05	17.05	628.4	12.47	12.01	11.36	10.75	10.20	9.70	9.22	8.78	8.37	7.98	7.61	7.28	6.96	6.66	6.39	6.12
						8.98	8.37	7.67	7.04	6.49	5.99	5.54	5.13	4.77	4.43	4.13	3.86	3.60	3.37	3.16	2.97
120DLH23	1.62	3048	18.86	18.86	695.3	13.76	13.23	12.52	11.86	11.25	10.69	10.17	9.69	9.22	8.78	8.37	7.99	7.64	7.31	6.99	6.69
						9.39	8.77	8.04	7.38	6.80	6.27	5.79	5.38	4.97	4.64	4.31	4.02	3.76	3.51	3.31	3.10
120DLH24	1.93	3048	22.36	22.36	824.6	16.30	15.65	14.81	14.02	13.30	12.65	12.02	11.45	10.91	10.40	9.93	9.50	9.09	8.69	8.33	7.99
						11.39	10.62	9.73	8.94	8.24	7.60	7.03	6.52	6.04	5.63	5.23	4.88	4.56	4.27	4.01	3.76
120DLH25	2.22	3048	25.63	25.63	944.8	18.73	17.96	17.00	16.11	15.27	14.50	13.80	13.13	12.52	11.95	11.41	10.91	10.43	9.98	9.57	9.16
						13.35	12.44	11.41	10.47	9.64	8.90	8.23	7.63	7.07	6.59	6.14	5.73	5.35	5.02	4.69	4.40

STANDARD WEIGHT TABLES FOR JOIST GIRDERS

Based on 50 ksi Maximum Yield Strength
Adopted by the Steel Joist Institute May 17, 2016

The Joist Girders presented in the following tables are based on the Steel Joist Institute Standard Specifications for K-Series, LH- Series, and DLH- Series Open Web Steel Joists and for Joist Girders adopted November 4, 1985 – revised to November 10, 2014, Effective January 1, 2015 and all the requirements contained therein shall be followed.

The Joist Girders top chords are considered as being laterally supported by positive attachment of the supported steel joists to the Joist Girder top chord.

The top of the table presents the total kip load on each panel point (joist location). The tables can be utilized with either an ASD load in the green row, or a LRFD load (factored) in the blue row.

These weight tables are intended to be a tool to assist in the preliminary design and estimate for Joist Girders used in floors and roofs. All of the values are approximate and intended as a guide for the specifying professional. The joist manufacturer will design for the specific loads of the designation at the required span, and the values for self-weight may vary from the tabulated values – the tabulated values are not design minimums or maximums. It is presumed that the designated kip load includes an allowance for the Joist Girder self-weight, unless noted otherwise on the structural drawings.

There are countless combinations of span, number of panels, kip loads, and Joist Girder depth and the tables do not represent all available combinations. Interpolation can be used for approximate values when needed between columns and rows of the tables.

Consult with a joist manufacturer for information regarding web openings available for duct passage through Joist Girders.

Joist Girders that are anticipated to have chord angles of 6 x 6 or smaller which are un-shaded in the table shall have a standard 7 ½ inch bearing seat depth (height). The weight table includes high capacity Joist Girders that may utilize 8 x 8 chord angles. The Joist Girders that weigh 150 plf or more are shaded grey in the table and shall have a standard 10 inch minimum bearing seat depth. It is suggested that the joist manufacturer be consulted for lead times and availability of Joist Girders in the grey shaded portion of the table due to the possibility of 8 x 8 chord angles.

Example

Using the Joist Girder Weight Table

1) Joist Girder depth = 40 inch
2) Joist Girder span = 50 feet
3) Number of joist spaces = 8
4) Load at each panel point =12 kips (ASD)

In this example, the corresponding Joist Girder designation is 40G8N12K.

Entering the weight tables for a Joist Girder span of 50 feet, a number of joist spaces equal to 8, a Joist Girder depth of 40 inch, and a panel point loading of 12 kips (ASD), the approximate self-weight of the Joist Girder is 59 pounds per linear foot.

GIRDER SPAN (ft)	JOIST SPACES (ft)	GIRDER DEPTH (in)	JOIST GIRDER WEIGHT -- POUNDS PER LINEAR FOOT																					
			LOAD ON EACH PANEL POINT -- KIPS																ASD		LRFD		
			6	8	10	12	14	16	18	20	24	28	32	36	40	44	48	52	56	60	70	80	90	100
			9	12	15	18	21	24	27	30	36	42	48	54	60	66	72	78	84	90	105	120	135	150
20	2N@ 10.00	20	19	19	19	19	20	24	24	25	30	37	41	46	50	56	62	70	75	75	80	91	121	128
		24	19	19	19	19	20	21	21	25	28	32	36	41	42	49	52	53	66	66	74	83	110	118
		28	19	19	19	19	20	20	21	23	26	28	32	39	40	42	46	48	49	56	58	74	104	108
	3N@ 6.67	20	15	19	19	20	23	24	27	31	36	44	48	54	74	75	81	84	89	96	110	122		
		24	16	16	16	19	20	23	26	27	33	36	45	47	53	56	68	79	82	84	98	108	126	
		28	16	16	16	17	20	24	24	26	31	36	44	46	49	53	57	68	78	79	80	89	119	124
	4N@ 5.00	20	15	19	21	25	29	33	38	41	50	57	65	71	88	97	100	107	120	126	149			
		24	16	17	20	23	26	29	32	35	44	50	55	62	71	85	90	100	102	109	130	154		
		28	16	17	19	22	25	28	30	34	39	49	50	59	63	72	86	91	91	93	113	126	141	160
	5N@ 4.00	20	17	21	26	31	36	39	48	51	62	71	82	99	99	109	120	141	142					
		24	16	20	23	26	30	35	39	43	53	60	68	80	91	101	103	110	120	134	158			
		28	16	18	22	27	28	33	37	39	48	55	64	68	77	93	95	107	111	119	139	162	184	216
	6N@ 3.33	20	19	25	29	36	41	50	57	58	72	82	99	107	118	138	141							
		24	18	22	28	31	37	43	46	53	61	70	85	102	102	111	123	144	147	175				
		28	18	22	26	30	33	40	42	47	58	68	76	83	96	109	112	119	130	139	183	211	223	263
	8N@ 2.50	20	25	32	41	51	58	65	72	82	99	118	139	142										
		24	22	29	36	42	50	54	61	69	86	103	107	128	149	153								
		28	22	29	34	40	47	54	61	67	76	88	107	112	124	135	155	166	196	198	246	277	285	
22	2N@ 11.00	20	21	21	22	22	23	24	24	25	34	39	43	49	55	62	69	76	78	82	90	108	129	130
		24	21	21	22	22	22	23	24	24	30	33	41	41	45	51	55	61	73	76	82	94	112	118
		28	21	21	21	22	22	22	23	24	29	30	33	41	42	46	48	51	58	59	72	81	106	112
	3N@ 7.33	20	18	18	19	22	24	26	29	33	42	45	53	68	70	76	84	88	94	104	120	138		
		24	15	19	19	20	23	24	26	30	35	40	45	48	55	61	74	81	84	92	98	113	127	
		28	16	16	16	19	20	23	24	27	32	36	45	47	52	54	59	74	82	76	86	100	121	126
	4N@ 5.50	20	16	19	23	26	30	36	39	44	55	62	71	82	95	96	106	119	134	144				
		24	15	17	20	25	27	29	34	38	48	52	58	71	79	89	98	101	107	115	144	153		
		28	16	16	19	22	25	28	32	35	40	49	54	60	72	79	87	90	97	109	120	135	158	179
	5N@ 4.40	20	17	24	27	34	38	42	49	55	65	75	96	98	111	126	137	158						
		24	16	20	24	28	33	38	40	48	56	62	73	85	100	101	110	116	133	153				
		28	16	18	22	26	30	32	38	41	51	57	65	73	86	92	102	105	111	126	159	170	183	
	6N@ 3.67	20	21	27	33	39	49	56	57	65	79	97	106	118	137									
		24	19	23	28	32	39	45	51	58	66	82	98	101	109	120	142	144						
		28	18	22	26	30	34	39	44	50	61	70	76	89	102	104	113	127	148	157	181	204	245	280
	8N@ 2.75	20	27	36	43	56	64	71	80	96	106	135	138											
		24	24	31	38	46	53	60	68	75	101	105	125	145	149									
		28	22	28	34	40	47	54	62	69	79	87	106	118	131	152	164	192	214	233	265	304	310	
25	3N@ 8.33	20	18	19	22	26	27	30	37	41	49	59	66	70	76	86	89	97	102	115	137			
		24	18	19	20	22	25	26	28	32	39	43	51	59	67	71	81	84	89	96	111	122		
		28	15	19	19	20	23	24	27	29	34	39	45	47	55	59	67	81	82	83	98	113	126	141
		32	16	16	16	20	21	23	24	27	32	36	44	46	52	54	58	74	81	73	86	100	121	119
		36	16	16	17	17	20	24	24	26	32	36	40	45	48	53	54	68	79	70	80	89	119	124
	4N@ 6.25	20	18	20	25	29	35	39	42	49	55	70	78	93	99	109	119	134	135					
		24	16	19	21	26	29	33	37	40	50	57	64	72	88	97	100	106	120	126	149			
		28	15	17	20	24	25	29	34	37	43	51	58	66	72	89	90	101	102	114	129	153	177	203
		32	16	17	19	21	25	28	32	35	40	49	54	60	69	79	86	91	96	109	117	135	153	188
		36	16	17	19	21	26	26	29	34	38	49	50	56	63	73	85	88	92	94	110	126	142	161
	5N@ 5.00	20	18	25	31	38	43	51	55	58	73	93	100	109	125	134								
		24	17	23	26	32	36	42	47	53	61	75	81	98	102	112	129	140	160					
		28	16	20	24	28	31	37	41	47	56	62	72	79	93	101	106	117	125	152	167	195	215	248
		32	16	19	23	26	30	33	38	41	51	57	65	73	83	93	102	105	111	129	158	169	183	212
		36	17	18	22	26	28	31	36	39	48	54	64	69	75	88	96	101	108	119	133	159	184	188
	6N@ 4.17	20	24	29	38	45	55	58	69	78	94	104	116	134										
		24	20	25	31	37	44	50	56	64	75	97	99	107	118	138								
		28	18	23	28	32	38	44	51	55	67	73	87	101	104	120	134	143	145	176	197	234	256	301
		32	18	22	26	30	34	39	44	50	61	69	77	89	102	105	113	127	148	158	184	215	245	277
		36	18	24	25	30	36	39	43	49	58	67	74	84	98	108	116	117	129	152	185	202	221	263
	8N@ 3.12	20	29	39	48	58	70	78	94	99	115	134												
		24	26	33	41	50	57	65	75	81	99	118	138											
		28	23	30	38	44	53	60	67	75	86	103	116	127	147	188	188	207	215	245	284			
		32	24	28	34	39	47	54	65	71	78	87	105	117	129	152	154	192	193	213	258	292	296	
		36	22	29	34	40	46	52	61	63	76	87	101	114	121	136	148	166	167	197	232	267	274	
	10N@ 2.50	20	38	49	63	78	94	100	115	134														
		24	33	42	54	65	75	89	99	104	130													
		28	30	38	48	56	64	74	84	101	109	134	147	179	207	211	234	272	293	308				
		32	28	36	43	52	62	69	76	87	107	118	130	153	193	203	216	240	257	282				
		36	28	37	44	52	64	71	77	85	100	116	130	151	157	179	201	215	235	253	299			

GIRDER SPAN (ft)	JOIST SPACES (ft)	GIRDER DEPTH (in)	JOIST GIRDER WEIGHT -- POUNDS PER LINEAR FOOT																					
			LOAD ON EACH PANEL POINT -- KIPS																	ASD		LRFD		
			6	8	10	12	14	16	18	20	24	28	32	36	40	44	48	52	56	60	70	80	90	100
			9	12	15	18	21	24	27	30	36	42	48	54	60	66	72	78	84	90	105	120	135	150
28	3N@ 9.33	24	18	19	22	24	27	29	36	39	43	53	62	70	71	78	85	89	98	111	130	138		
		28	18	19	20	22	25	26	28	31	39	43	46	55	61	66	76	83	86	96	112	122	132	160
		32	18	19	19	21	23	24	27	28	34	39	45	48	53	58	66	80	81	86	98	113	126	135
	4N@ 7.00	24	16	20	24	27	32	38	40	48	55	62	71	82	95	104	106	120	135	144				
		28	15	18	21	25	28	32	36	39	49	56	64	71	79	96	97	106	107	125	147	171	180	206
		32	15	17	20	23	25	29	33	37	43	50	58	62	70	85	90	99	102	107	129	153	177	185
	5N@ 5.60	24	18	24	29	34	39	46	52	58	66	78	96	102	111	126	136							
		28	17	21	26	30	35	39	46	50	61	68	77	90	99	107	114	130	142	162	184	213	239	257
		32	17	20	24	27	32	37	41	44	56	62	70	80	93	102	107	112	119	143	167	197	215	244
	6N@ 4.67	24	21	28	35	41	49	55	63	70	79	96	106	134	137									
		28	20	24	30	36	42	50	54	58	71	82	99	107	118	138	142	170	174	193	228	261	268	
		32	19	23	28	32	37	43	49	53	64	74	84	101	102	111	123	144	146	176	198	234	244	297
	7N@ 4.00	24	24	32	41	49	56	64	74	79	96	110	135	156										
		28	22	27	35	43	51	57	62	69	82	99	108	129	140	162	173	195	198	222	265	305		
		32	21	27	31	38	44	52	55	63	74	85	102	108	123	143	146	175	187	207	241	273	276	
	8N@ 3.50	24	28	37	48	55	64	74	79	95	105	134												
		28	25	32	39	50	58	65	72	81	99	108	129	141	172	197	203	231	237	263				
		32	24	29	38	43	53	60	64	70	86	103	113	127	147	149	188	208	210	244	281			
	10N@ 2.80	24	36	46	57	70	79	96	102	117	137													
		28	30	41	50	60	69	82	99	100	120	141	174	203	219	239	265	295	311					
		32	30	38	46	55	66	71	80	93	109	126	147	179	199	212	226	258	274	292				
30	3N@ 10.00	24	18	21	24	27	31	35	38	40	48	58	66	71	80	92	98	117	119	120	137			
		28	18	19	22	25	27	30	35	37	42	49	56	63	70	79	82	93	99	103	121	132	161	183
		32	18	19	20	22	26	28	31	32	39	46	51	57	64	71	73	83	84	91	99	113	126	141
		36	19	19	19	21	23	26	28	31	35	39	46	52	57	64	65	73	75	80	94	101	122	126
	4N@ 7.50	24	18	23	29	33	37	42	49	53	64	76	85	101	104	126	127	149	150					
		28	16	21	25	30	33	37	42	45	53	61	73	81	86	103	104	126	128	144	156	170	192	231
		32	16	18	22	26	30	34	37	43	51	55	62	70	77	87	103	105	116	121	148	157	180	202
		36	16	17	22	24	27	31	34	36	46	52	59	64	74	78	88	91	105	108	119	151	159	187
	5N@ 6.00	24	19	25	30	37	43	51	55	58	73	86	96	109	125	134								
		28	17	23	27	32	37	44	47	53	61	75	88	97	102	112	128	138	159	170	192	224	242	270
		32	17	21	24	29	35	39	43	48	56	63	77	90	100	101	107	117	133	154	176	195	227	244
		36	17	20	24	27	31	36	40	43	51	60	70	80	86	94	103	110	118	135	157	178	185	229
	6N@ 5.00	24	24	29	37	45	52	58	66	73	94	104	116	134										
		28	20	27	32	38	44	50	57	65	75	97	99	107	137	140	170	180	186	192	227	284		
		32	19	24	29	34	40	45	51	58	65	82	98	100	109	121	142	144	174	183	197	233	257	299
		36	18	23	26	31	37	41	46	52	61	70	84	101	102	111	123	126	148	155	179	202	246	272
	8N@ 3.75	24	32	40	51	63	73	83	99	111	124	146												
		28	30	37	44	53	61	73	80	86	114	126	149	170	172	192	220	224	258	284				
		32	26	34	42	49	55	63	71	79	104	117	130	154	161	184	203	208	240	243	307			
		36	23	32	39	46	54	61	69	76	89	108	121	134	154	169	189	194	212	219	256	313		
	10N@ 3.00	24	38	51	66	78	99	111	123	134														
		28	36	47	57	69	80	94	113	116	138	161	183	204	226	249	282							
		32	31	39	52	58	74	82	95	105	129	142	165	185	205	222	252	270	299					
		36	30	39	48	54	68	79	84	91	119	132	151	170	191	210	215	248	261	279				
32	3N@ 10.67	24	19	21	26	27	34	38	40	42	54	61	70	75	84	88	102	102	113	151	160			
		28	17	18	24	26	28	31	34	37	43	55	60	69	70	76	85	89	93	111	121	138	162	196
		32	17	18	21	25	26	28	32	34	39	44	54	61	62	67	77	80	86	96	112	122	132	160
		36	17	19	20	23	25	26	28	30	38	40	45	51	53	58	67	81	85	91	98	113	127	136
	4N@ 8.00	24	19	23	26	32	37	40	47	55	61	72	86	94	103	114	133	134	162					
		28	18	20	24	28	32	37	40	45	55	62	70	78	94	96	105	121	135	144	167	189	235	250
		32	15	20	22	25	29	32	36	39	49	56	64	71	83	94	97	102	107	125	147	171	180	207
		36	16	17	21	24	26	30	34	36	43	50	58	65	70	85	90	99	102	107	129	153	177	185
	5N@ 6.40	24	20	27	33	39	44	51	57	65	77	93	100	123	133									
		28	18	24	28	34	39	46	52	58	66	74	96	101	110	126	137	158	167	180	202	234	253	295
		32	17	22	26	32	35	41	46	53	61	68	77	90	99	105	114	130	142	162	184	204	240	255
		36	17	21	24	27	33	37	42	47	56	62	70	79	93	102	106	117	120	144	167	187	203	233
	6N@ 5.33	24	24	31	39	47	55	61	69	76	94	103	133	134										
		28	21	27	35	40	48	55	60	67	79	96	105	117	137	158	170	190	191	222	246	274		
		32	20	25	30	36	42	50	54	58	71	82	99	103	118	139	142	170	174	193	228	258	268	
		36	19	24	28	34	38	44	49	55	66	73	84	101	102	111	123	144	146	176	206	234	244	293
	8N@ 4.00	24	32	40	54	61	72	86	93	103	133													
		28	27	35	45	55	63	70	80	95	105	134	137	169	189	198	221	242	264	274				
		32	25	32	39	50	58	65	71	81	99	109	120	141	173	186	202	214	228	261	295			
		36	24	31	38	43	53	59	67	71	86	103	113	127	147	181	188	207	212	242	277	315		

GIRDER SPAN (ft)	JOIST SPACES (ft)	GIRDER DEPTH (in)	JOIST GIRDER WEIGHT -- POUNDS PER LINEAR FOOT																						
			LOAD ON EACH PANEL POINT -- KIPS																	ASD		LRFD		
			6	8	10	12	14	16	18	20	24	28	32	36	40	44	48	52	56	60	70	80	90	100
			9	12	15	18	21	24	27	30	36	42	48	54	60	66	72	78	84	90	105	120	135	150
35	4N@ 8.75	28	19	23	27	31	36	41	46	52	60	74	79	94	100	111	117	137	138	156	185	194	237	256
		32	18	21	24	28	33	37	39	45	53	60	73	80	92	100	106	112	127	144	159	171	196	229
		36	16	20	23	27	30	33	37	41	51	55	62	74	83	94	97	107	113	115	147	162	184	194
		40	16	17	21	26	27	30	37	38	46	52	61	64	75	90	95	96	108	107	129	153	177	185
	5N@ 7.00	28	20	26	32	37	43	52	57	59	73	86	100	109	126	136	137	138	139	190	224	258	273	
		32	18	24	29	34	37	45	50	53	66	75	88	100	102	112	128	138	139	170	194	224	253	292
		36	17	23	27	29	35	40	46	48	62	68	77	90	100	104	115	131	133	153	175	205	240	254
		40	17	22	25	27	33	37	43	47	56	63	70	80	95	102	107	115	125	144	166	199	206	223
	6N@ 5.83	28	24	30	37	44	52	58	65	73	93	103	115	134	154	166	187	202	213	230	270			
		32	21	27	33	38	46	53	57	65	79	96	100	117	139	140	170	172	191	202	236	281		
		36	20	25	31	36	41	48	54	58	70	81	99	102	113	121	142	144	174	187	211	241	269	314
		40	20	24	28	34	38	44	49	55	64	77	84	101	104	115	123	145	146	168	208	215	244	273
	7N@ 5.00	28	27	34	43	52	59	66	74	86	101	115	135	167	178	190	215	233	245	268				
		32	24	30	39	47	53	61	67	75	97	103	118	137	160	171	192	196	226	238	282			
		36	23	28	35	42	48	55	62	69	82	99	105	120	141	144	173	186	196	211	250	291		
		40	22	27	32	39	44	50	55	63	73	86	102	107	118	133	147	166	178	188	219	266	276	
	8N@ 4.38	28	30	39	48	59	69	78	94	98	115	136	165	187	202	217	243	269	289	296				
		32	27	36	42	53	61	69	79	88	101	118	138	170	172	191	219	223	245	272				
		36	26	32	39	48	55	62	71	77	99	109	121	141	164	175	202	207	232	248	294			
		40	24	30	37	44	54	60	65	73	86	102	113	127	147	149	185	198	210	215	273	310		
38	4N@ 9.50	32	19	21	26	31	34	39	43	48	58	67	74	87	100	101	111	127	138	144	168	190	237	248
		36	17	21	24	28	33	35	39	44	53	60	74	75	93	97	106	112	123	125	153	170	180	225
		40	16	20	23	27	30	34	37	41	51	55	62	74	83	94	98	107	109	115	147	153	177	202
		44	16	20	22	26	28	30	35	38	46	52	58	65	75	90	95	95	108	112	124	150	160	177
	5N@ 7.60	32	20	25	31	36	42	46	52	59	70	86	96	101	111	126	137	158	177	185	205	237	253	
		36	20	24	28	33	38	45	47	53	64	74	89	98	103	112	129	138	160	167	184	215	242	270
		40	20	23	26	31	35	40	46	48	59	70	78	91	101	105	113	117	134	153	176	203	216	242
		44	20	22	25	30	33	39	41	48	56	63	75	80	93	102	107	111	118	145	166	199	204	229
	6N@ 6.33	32	24	30	35	41	49	55	62	70	86	98	105	125	136	167	175	189	196	222	247	293		
		36	21	27	33	39	47	50	57	61	75	89	100	107	118	141	142	172	183	194	227	250	273	
		40	21	25	31	36	40	48	55	59	71	82	99	102	109	121	143	142	174	182	206	233	257	294
		44	20	24	29	33	38	44	49	55	64	77	84	102	104	115	123	145	147	169	190	209	245	270
	8N@ 4.75	32	29	38	47	56	64	74	86	95	105	135	156	169	189	217	229	247	271	299				
		36	28	35	42	50	57	65	76	81	101	113	138	140	172	192	212	222	245	260	315			
		40	26	32	40	48	55	62	67	78	100	103	121	142	144	175	202	205	222	238	283			
		44	24	30	39	47	51	57	64	71	86	102	113	127	147	149	187	199	210	222	272	309		
40	4N@ 10.00	32	20	23	29	37	40	47	50	56	64	73	86	103	114	126	128	149	151	164	177	195	238	249
		36	19	22	29	31	37	40	44	51	57	65	74	87	103	104	125	127	128	144	168	180	210	228
		40	18	22	25	29	33	37	40	47	52	62	73	77	87	96	104	117	127	132	148	171	181	203
		44	17	20	24	29	31	36	38	41	49	59	66	74	78	84	96	106	106	111	129	150	177	186
		48	17	20	24	25	30	32	37	39	48	53	59	67	78	78	85	99	106	108	120	144	159	178
	5N@ 8.00	32	21	26	32	38	43	52	55	62	73	86	101	109	124	134	154	167	177	190	224	257	278	
		36	20	24	30	34	39	45	53	55	66	74	88	102	102	112	128	138	159	170	194	235	252	292
		40	20	24	27	32	37	41	46	51	62	68	77	90	100	105	115	130	142	162	183	214	240	253
		44	20	23	29	32	37	41	49	50	58	70	82	84	99	102	118	130	141	144	168	198	212	242
		48	20	23	26	31	34	40	41	50	57	68	75	85	95	100	119	120	132	138	159	182	185	226
	6N@ 6.67	32	24	30	38	44	52	58	65	72	93	100	115	133	154	166	186	190	213	221	269			
		36	22	27	34	39	47	53	60	67	79	97	102	117	137	141	170	172	191	194	235	271		
		40	21	26	30	36	43	48	54	62	71	82	99	103	114	130	142	163	174	185	219	254	271	
		44	21	24	28	36	40	47	51	55	66	78	91	102	107	116	134	142	146	177	208	234	247	291
		48	21	24	31	36	42	46	53	57	69	79	86	100	109	112	133	135	143	174	182	204	237	267
	7N@ 5.71	32	26	33	43	52	58	66	74	86	101	115	135	167	178	191	205	233	245	258				
		36	24	31	39	47	53	61	67	75	97	103	117	136	159	171	191	206	219	237	280			
		40	24	29	35	43	49	55	62	69	82	99	105	119	140	162	174	187	199	213	256	298		
		44	22	28	33	39	48	55	59	64	78	92	102	111	122	143	165	176	187	200	230	269	276	
		48	23	28	36	41	48	54	61	66	80	86	108	110	116	136	164	167	174	192	216	256	268	
	8N@ 5.00	32	29	38	48	58	67	78	94	96	115	135	165	188	195	217	243	259	280					
		36	27	36	46	53	60	68	80	88	102	118	137	170	180	193	219	231	245	276				
		40	25	34	39	49	58	65	72	82	99	109	120	141	173	189	205	220	226	258	291			
		44	27	33	39	47	56	63	70	75	93	103	120	136	147	185	195	205	216	240	275			
		48	25	32	42	47	55	62	69	80	90	104	122	136	155	170	182	189	210	218	261	296	310	
	10N@ 4.00	32	39	51	64	79	92	112	123	125	149	177	195	220	244	268								
		36	36	47	60	69	81	94	103	125	150	161	182	211	234	249	280	290						
		40	36	45	56	66	75	82	96	115	129	152	173	184	216	231	257	274	304					
		44	32	41	51	60	71	82	84	99	119	143	161	178	198	220	234	254	280	297				
		48	32	41	52	58	68	76	85	94	121	134	152	169	181	201	215	242	256	275				

GIRDER SPAN (ft)	JOIST SPACES (ft)	GIRDER DEPTH (in)	JOIST GIRDER WEIGHT -- POUNDS PER LINEAR FOOT																					
			LOAD ON EACH PANEL POINT -- KIPS																	ASD		LRFD		
			6	8	10	12	14	16	18	20	24	28	32	36	40	44	48	52	56	60	70	80	90	100
			9	12	15	18	21	24	27	30	36	42	48	54	60	66	72	78	84	90	105	120	135	150
42	4N@ 10.50	32	21	25	29	34	38	43	49	53	67	74	86	99	101	112	125	134	138	163	195	224	250	275
		36	19	22	26	32	35	39	44	47	58	67	73	87	95	101	112	118	129	145	168	191	237	246
		40	19	21	24	28	34	36	41	45	53	61	73	76	93	97	97	113	122	125	147	171	194	210
		44	19	20	23	27	31	34	38	42	51	55	62	74	84	94	97	108	109	118	138	159	179	203
		48	19	21	24	26	29	32	36	39	47	54	62	65	75	90	95	97	108	112	130	150	160	177
	5N@ 8.40	32	22	28	35	41	45	52	57	66	74	88	100	110	125	152	166	176	189	199	225	258		
		36	21	25	31	36	42	46	52	59	70	85	96	102	111	126	137	158	168	179	203	235	253	275
		40	21	24	28	33	39	44	51	54	64	74	89	98	103	113	129	130	160	171	183	213	241	263
		44	20	24	27	31	37	40	46	52	59	69	78	91	101	105	113	126	134	151	176	207	216	242
		48	20	23	27	30	35	39	42	48	57	63	75	81	95	102	107	115	118	145	168	199	206	229
	6N@ 7.00	32	25	32	39	45	55	61	69	77	93	103	124	135	163	175	187	202	213	239	277			
		36	23	30	35	41	49	56	60	67	79	96	105	117	137	158	169	190	204	207	243	282		
		40	21	26	33	39	46	54	57	61	75	89	100	108	119	141	142	172	183	194	227	249	267	
		44	21	24	31	35	41	48	54	59	71	81	100	102	109	121	143	142	174	176	208	233	254	302
		48	20	25	29	33	39	44	49	56	64	77	85	102	104	115	124	145	147	169	191	216	246	269
	7N@ 6.00	32	28	36	45	52	65	72	85	93	102	125	154	166	187	200	225	239	252	277				
		36	26	34	40	49	56	67	74	79	98	110	127	138	169	181	194	208	235	248	289			
		40	24	31	38	46	54	61	68	75	90	101	113	129	142	172	184	195	208	230	267	297		
		44	23	29	35	41	49	55	63	70	78	100	106	116	132	145	166	184	198	203	246	281	299	
		48	23	28	34	39	44	50	56	64	73	92	102	108	118	136	149	169	184	190	220	255	265	
	8N@ 5.25	32	32	40	51	62	72	78	94	100	124	135	166	188	213	235	245	268						
		36	27	38	46	56	64	74	79	96	105	126	138	169	189	208	220	246	263	274				
		40	26	35	42	51	57	65	76	81	101	113	138	141	173	192	211	222	237	256	311			
		44	25	32	39	49	55	63	70	78	99	107	121	142	147	175	201	206	223	238	283			
		48	26	32	41	48	56	63	67	74	93	103	112	128	148	169	188	198	210	230	271	307		
	10N@ 4.20	32	38	52	62	77	94	101	114	134	164	187	215	239	264	291	308							
		36	36	46	60	70	86	97	102	112	140	179	193	223	244	268	298							
		40	34	45	54	64	75	89	99	104	129	161	182	205	218	237	268	301	308					
		44	31	41	52	61	70	79	91	100	114	143	164	185	208	221	241	269	284	310				
		48	30	39	49	56	66	72	80	93	107	125	146	168	199	211	226	252	267	285				
45	4N@ 11.25	36	21	25	28	33	38	42	46	52	62	72	79	95	100	112	117	128	138	154	178	193	238	250
		40	21	22	27	31	35	39	44	47	55	64	75	87	95	101	112	113	128	144	169	180	211	228
		44	21	22	24	29	33	37	39	45	53	61	74	76	89	95	102	108	114	125	148	171	193	215
		48	21	22	24	28	31	34	38	40	51	55	63	75	83	94	95	107	109	115	139	164	180	204
		52	22	23	24	27	29	33	37	39	47	52	60	66	76	91	95	96	109	112	125	153	161	178
	5N@ 9.00	36	22	27	33	38	44	52	55	63	74	86	101	109	125	136	155	167	177	191	224	256	278	
		40	21	25	30	36	42	45	53	56	68	75	88	102	111	122	128	156	159	180	203	234	253	287
		44	21	24	29	34	38	44	46	54	65	74	85	90	103	110	123	130	142	159	184	215	248	263
		48	21	24	27	32	36	41	45	52	59	67	75	91	95	106	112	118	134	151	179	208	232	241
		52	21	24	27	30	35	39	42	48	57	64	75	81	94	98	107	117	119	145	169	200	212	225
	6N@ 7.50	36	24	31	38	45	52	58	66	74	93	100	115	134	154	167	187	190	203	221	258			
		40	23	28	34	40	47	53	60	67	79	97	103	117	137	140	170	181	191	203	244	271		
		44	21	27	32	38	46	50	54	62	76	90	100	107	118	139	142	172	175	194	228	252	280	
		48	21	26	30	36	42	48	55	59	69	78	92	102	110	122	143	143	167	177	207	233	265	289
		52	21	25	29	34	39	44	50	56	64	77	85	102	102	116	124	136	148	169	191	214	246	268
	7N@ 6.43	36	27	35	44	52	58	66	74	86	101	115	135	158	176	191	206	233	246	258				
		40	26	33	40	47	54	61	67	75	97	105	127	138	160	179	192	206	227	237	288			
		44	24	30	39	46	54	61	62	69	90	100	113	129	143	163	184	196	201	221	256	297		
		48	23	29	36	41	49	55	63	70	79	92	107	117	133	145	166	177	190	203	246	277	299	
		52	23	28	34	39	45	50	56	65	73	93	102	109	118	136	149	170	183	194	224	254	274	
	8N@ 5.62	36	30	38	48	58	67	78	94	98	114	135	165	188	193	216	243	259	280					
		40	28	36	46	53	61	68	80	89	105	118	137	170	181	196	219	232	247	275				
		44	27	34	41	51	58	66	73	81	99	109	130	141	173	185	202	215	226	249	298			
		48	26	32	39	47	55	63	68	74	92	104	116	142	146	176	193	208	216	240	270			
		52	28	33	42	48	54	59	67	71	94	102	112	127	148	167	188	198	210	219	259	304		
	9N@ 5.00	36	34	45	55	66	74	88	98	104	135	165	179	203	229	241	271	294						
		40	31	39	49	61	69	80	89	100	113	138	168	188	196	223	247	263	293					
		44	31	39	48	58	66	76	89	99	108	132	162	178	190	216	241	248	275	302				
		48	29	37	47	55	63	70	79	91	106	117	133	166	188	206	224	235	251	279	298			
		52	28	36	46	55	60	70	73	84	102	112	135	148	169	197	200	226	231	259	293			
	10N@ 4.50	36	38	49	60	73	86	98	105	116	137	177	192	220	245	268								
		40	35	47	60	66	76	90	102	112	140	170	182	211	236	264	289	299						
		44	33	46	54	64	72	89	99	104	130	142	173	203	216	239	260	274	302					
		48	31	40	49	62	71	78	91	100	114	134	164	186	205	219	240	267	279	304				
		52	31	39	50	56	67	72	80	93	107	123	147	168	190	211	224	251	264	282				

GIRDER SPAN (ft)	JOIST SPACES (ft)	GIRDER DEPTH (in)	JOIST GIRDER WEIGHT -- POUNDS PER LINEAR FOOT																					
			LOAD ON EACH PANEL POINT -- KIPS																	ASD		LRFD		
			6	8	10	12	14	16	18	20	24	28	32	36	40	44	48	52	56	60	70	80	90	100
			9	12	15	18	21	24	27	30	36	42	48	54	60	66	72	78	84	90	105	120	135	150
48	5N@ 9.60	36	26	31	37	45	52	59	66	71	87	111	113	135	136	152	167	176	189	200	228	269		
		40	23	29	35	41	46	52	59	68	77	92	112	114	136	138	155	161	178	188	203	237	272	
		44	22	27	32	37	44	48	54	61	69	80	93	113	116	126	139	150	160	174	195	226	253	275
		48	21	25	30	36	40	48	48	55	69	78	90	96	115	116	128	140	142	166	185	219	241	263
		52	21	25	29	33	39	42	50	54	62	71	82	92	99	117	118	130	141	157	178	206	224	241
		56	21	24	29	33	38	40	46	50	59	71	79	85	100	100	119	120	133	146	170	200	212	226
	6N@ 8.00	36	28	35	42	51	62	70	78	83	100	122	134	147	163	175	189	202	222	233	277			
		40	25	33	39	47	56	64	71	79	93	112	124	137	148	168	179	189	212	222	247	282		
		44	24	31	36	45	50	57	65	73	81	102	115	127	138	151	168	173	192	204	236	262	292	
		48	23	30	35	40	48	52	59	67	78	95	105	116	129	141	160	166	175	186	220	252	279	310
		52	23	27	32	38	46	51	59	60	75	83	97	107	130	131	144	162	169	178	208	234	259	290
		56	22	27	31	37	42	48	54	61	69	80	91	107	120	132	134	153	165	166	191	208	246	267
	8N@ 6.00	36	36	45	56	64	78	91	100	122	134	153	167	186	213	234	257	278						
		40	33	42	51	59	70	80	92	101	124	148	157	170	191	208	229	248	272	288				
		44	32	39	49	55	65	74	82	95	114	127	150	161	185	193	212	223	244	268				
		48	30	37	47	53	60	68	76	84	105	129	131	154	174	189	197	216	226	247	290			
		52	30	36	44	51	59	65	71	80	99	119	132	146	164	185	195	209	221	239	283			
		56	28	36	43	49	57	63	69	78	90	109	123	136	155	168	189	198	209	228	258	294		
	9N@ 5.33	36	44	55	70	79	91	99	121	122	146	165	190	215	237	252	279							
		40	42	52	63	74	88	93	101	113	136	156	179	195	218	230	256	284						
		44	39	50	59	69	83	91	94	103	126	150	168	182	199	222	236	257	285	302				
		48	37	46	56	66	76	85	94	97	118	130	162	175	190	217	224	247	273	290				
		52	36	46	54	63	72	80	95	101	108	132	152	167	188	212	220	242	251	277				
		56	35	44	53	62	69	80	89	98	103	123	137	165	180	207	211	236	240	271	314			
	12N@ 4.00	36	52	71	84	100	123	135	148	167	190	230	256	289										
		40	48	65	76	93	113	125	137	149	177	206	233	260	288									
		44	44	57	73	82	102	115	126	139	159	193	211	239	271	297								
		48	41	53	67	76	88	104	117	130	153	175	197	221	246	276	301							
		52	39	52	61	76	84	97	107	131	144	168	190	212	237	261	280	306						
		56	38	49	61	70	81	91	108	122	135	165	183	195	217	242	266	287	312					
50	5N@ 10.00	40	23	30	38	44	47	56	60	68	79	93	113	124	136	138	155	165	177	182	216	257	279	
		44	22	29	34	40	46	51	56	61	76	89	94	113	126	137	139	157	172	180	203	236	255	292
		48	22	28	31	38	42	48	55	61	69	78	94	96	115	127	139	141	160	172	192	207	241	262
		52	22	25	31	35	40	45	49	55	62	74	82	96	116	117	129	141	142	161	186	203	227	243
		56	22	25	30	32	40	43	50	51	63	71	83	92	99	117	119	131	142	146	169	199	219	231
		60	20	24	30	33	36	42	46	51	58	65	76	86	96	101	120	121	133	142	166	174	198	226
	6N@ 8.33	40	28	34	42	48	56	64	71	80	100	112	124	147	155	167	178	191	204	231	258			
		44	24	31	38	47	50	57	65	73	85	102	124	127	149	159	168	181	191	213	246	270		
		48	23	30	37	40	49	57	65	67	82	95	115	127	129	151	162	173	184	195	229	250	292	
		52	23	30	36	40	46	52	59	67	75	84	105	117	129	131	153	162	176	188	218	242	269	300
		56	23	26	33	39	42	51	54	60	72	84	98	107	120	132	144	163	164	176	209	225	257	280
		60	23	27	33	38	43	49	53	61	70	80	87	102	110	123	134	154	165	171	182	207	247	264
	8N@ 6.25	40	31	39	51	59	67	78	86	96	110	135	166	177	193	217	244	259	281					
		44	29	37	47	53	61	70	80	96	103	118	139	170	182	198	221	230	254	276				
		48	27	35	42	51	58	69	76	81	99	114	130	142	175	186	201	224	242	255	297			
		52	25	33	40	49	55	63	70	78	99	107	121	141	164	178	197	207	218	236	281			
		56	29	36	42	47	56	64	68	78	94	108	118	137	148	169	192	204	212	230	271	315		
		60	27	35	40	47	55	61	69	74	83	103	110	123	139	149	182	200	208	215	258	291	312	
	9N@ 5.56	40	34	44	55	66	74	86	96	104	134	155	179	203	219	242	256	286						
		44	32	40	53	61	69	80	88	98	113	138	169	195	207	223	244	267	293					
		48	32	42	52	58	69	77	90	99	111	133	163	184	201	216	241	250	274	300				
		52	31	40	47	58	66	74	79	92	106	126	143	178	192	207	222	244	254	278	312			
		56	30	38	46	55	60	68	77	89	102	116	135	166	181	197	211	237	251	272	309			
		60	32	38	49	53	61	70	75	83	97	111	125	141	179	192	209	227	239	266	303			
	10N@ 5.00	40	38	49	60	74	87	96	104	116	139	177	194	220	244	269								
		44	36	47	60	68	84	96	102	112	137	170	188	211	235	264	289	294						
		48	34	46	54	65	76	89	99	103	130	159	182	205	217	239	268	284	298					
		52	34	45	52	62	70	79	91	100	114	134	164	185	207	222	239	270	282	305				
		56	32	41	48	60	70	76	87	93	107	134	146	174	198	211	232	250	279	283				
		60	31	40	49	57	66	73	81	94	109	119	138	169	180	201	225	230	253	272				
	12N@ 4.17	40	49	65	80	100	112	125	147	157	180	206	241	269										
		44	44	57	73	86	102	126	127	149	168	192	227	248	280	302								
		48	41	58	67	82	96	115	127	130	154	184	199	230	254	284	310							
		52	39	53	68	76	84	105	118	130	154	176	189	219	244	263	289	314						
		56	40	52	61	70	85	99	108	122	135	164	182	210	228	252	270	296						
		60	39	49	61	70	82	88	104	112	135	166	175	196	219	242	258	274	302					

GIRDER SPAN (ft)	JOIST SPACES (ft)	GIRDER DEPTH (in)	JOIST GIRDER WEIGHT -- POUNDS PER LINEAR FOOT																			
			LOAD ON EACH PANEL POINT -- KIPS														ASD		LRFD		
			6	8	10	12	14	16	18	20	22	24	26	28	30	35	40	45	50	55	60	65
			9	12	15	18	21	24	27	30	33	36	39	42	45	52.5	60	67.5	75	82.5	90	97.5
55	5N@ 11.00	44	24	29	35	41	47	53	59	63	71	82	83	86	97	110	127	141	157	174	193	207
		48	23	28	32	38	43	49	56	60	64	71	73	83	93	104	121	133	148	167	179	193
		52	23	27	32	36	42	44	52	57	65	66	74	74	90	99	114	124	139	156	170	181
		56	24	26	31	36	39	44	51	53	58	66	66	74	79	92	110	121	135	148	162	173
		60	24	27	31	35	38	45	47	52	60	61	67	68	80	88	101	115	124	138	147	163
		66	24	26	28	34	37	42	47	48	55	56	62	69	73	83	99	109	118	128	143	155
	6N@ 9.17	44	26	33	38	45	52	59	66	75	86	86	98	101	117	136	155	174	189	207	232	247
		48	24	31	36	44	50	56	64	68	75	87	89	94	109	122	147	155	181	194	214	237
		52	24	29	35	41	48	54	61	64	72	75	80	88	106	117	139	149	164	188	196	208
		56	24	28	35	39	47	52	55	63	70	71	78	82	101	113	122	140	158	176	187	195
		60	24	29	33	38	43	48	55	60	64	71	75	80	95	108	116	132	153	158	179	187
		66	22	28	31	36	40	47	50	56	62	65	73	73	86	102	112	128	136	143	160	181
	7N@ 7.86	44	28	36	44	53	59	70	75	87	97	102	111	120	135	152	178	189	219	236	257	274
		48	27	34	43	51	56	65	72	76	89	98	103	110	120	135	171	184	207	228	241	263
		52	26	33	39	46	55	62	69	74	86	91	100	105	116	126	160	175	190	207	234	252
		56	25	31	38	46	53	55	64	70	79	87	92	101	111	118	148	158	182	203	221	240
		60	24	30	36	41	49	56	64	68	72	81	93	94	108	111	140	141	169	192	203	224
		66	24	30	36	40	48	52	58	65	70	74	83	84	103	106	129	134	159	177	196	208
	9N@ 6.11	44	34	46	55	67	74	87	98	105	116	135	137	158	169	199	229	240	284			
		48	32	40	53	61	69	81	97	103	107	118	129	139	165	183	208	238	259	291		
		52	33	43	52	65	73	77	90	104	105	114	125	133	157	177	203	231	249	273	301	
		56	32	43	51	59	67	75	87	92	105	107	117	128	143	161	193	217	242	259	286	302
		60	32	40	47	56	67	71	80	93	95	108	109	118	139	145	188	199	224	248	277	291
		66	31	39	46	54	61	71	78	83	91	97	111	113	127	136	172	185	207	222	255	269
	11N@ 5.00	44	43	55	67	87	97	106	126	137	158	178	180	193	208	246	285					
		48	39	54	65	76	89	103	112	128	139	160	171	183	197	235	263	272				
		52	37	52	62	73	88	99	105	115	131	142	161	174	185	211	243	266	302			
		56	39	48	60	68	80	93	102	107	118	134	146	166	174	198	230	259	290	304		
		60	37	47	58	67	77	82	95	108	110	121	137	148	164	191	227	248	275	289		
		66	36	45	54	65	74	82	97	98	113	117	126	141	151	184	206	226	261	275	301	308
60	5N@ 12.00	48	27	33	39	44	51	57	63	69	76	87	89	94	98	108	128	152	164	180	190	208
		52	27	31	36	44	47	52	60	65	69	77	85	90	94	103	125	133	155	168	179	189
		56	24	30	34	41	45	52	59	63	69	74	78	87	90	100	116	128	139	156	173	185
		60	24	29	34	40	45	49	53	60	66	70	75	80	87	95	112	121	135	145	164	175
		66	24	30	33	36	42	47	51	56	61	67	72	73	81	92	102	117	123	133	148	167
		72	25	27	31	36	39	45	48	56	56	63	69	70	75	83	99	110	118	129	144	150
	6N@ 10.00	48	29	36	41	49	60	67	72	80	93	93	112	113	119	128	156	174	189	205	227	242
		52	28	33	39	48	57	62	69	78	80	94	94	113	116	122	147	159	181	195	214	237
		56	25	33	39	48	51	58	66	69	79	83	95	96	106	107	139	150	174	187	198	222
		60	24	32	39	43	50	57	63	70	75	83	83	96	101	103	123	133	165	176	187	205
		66	24	32	34	42	50	52	61	65	69	77	84	85	96	98	119	126	151	167	179	196
		72	24	28	34	41	44	52	54	63	68	71	75	87	87	93	113	119	145	156	169	182
	8N@ 7.50	48	34	43	56	64	72	80	93	112	123	125	136	148	155	173	194	233	248	262		
		52	31	40	50	58	72	81	94	103	114	125	127	139	146	174	191	209	231	251	276	292
		56	31	38	49	58	66	75	83	96	104	116	127	129	139	148	176	192	215	240	251	269
		60	32	39	47	53	61	69	77	85	98	106	118	122	124	140	170	184	205	229	242	260
		66	33	41	46	53	62	70	78	82	90	100	108	120	122	123	161	171	198	207	231	251
		72	31	36	46	52	59	66	73	80	90	92	104	110	114	118	150	158	190	202	226	244
	10N@ 6.00	48	37	49	60	74	87	97	105	118	137	138	167	180	190	233	245	264				
		52	38	50	64	71	88	97	103	113	130	138	160	173	181	208	237	257				
		56	37	46	58	65	76	90	104	105	123	131	143	160	172	193	228	251	281	305		
		60	37	45	57	66	73	86	93	104	111	126	134	159	167	182	217	244	270	288		
		66	37	49	56	65	74	85	95	102	120	122	134	145	146	164	199	218	242	262	292	307
		72	33	42	50	59	69	74	83	96	98	111	111	121	142	158	193	201	226	250	281	296
	12N@ 5.00	48	46	59	75	87	102	111	135	158	169	181	194	207	233	250	291					
		52	45	57	69	88	98	104	118	139	160	169	183	196	206	241	283					
		56	41	55	66	77	91	104	113	129	140	162	174	185	198	235	266	285				
		60	39	54	64	74	91	102	106	121	133	145	165	177	188	205	245	263	309			
		66	41	53	62	77	87	100	110	119	134	147	164	171	182	194	230	251	283	297		
		72	38	50	60	69	77	86	100	110	114	127	142	151	165	183	218	245	270	286	314	
	15N@ 4.00	48	64	80	102	124	136	158	170	189	209	235	252	267	293							
		52	57	74	94	114	127	150	161	182	193	212	232	252	268							
		56	53	71	83	104	127	140	153	171	186	198	215	234	247	276						
		60	51	68	83	98	118	132	144	162	178	189	207	219	235	261	308					
		66	49	62	81	87	110	123	136	153	167	183	193	210	217	253	289					
		72	46	64	77	90	106	125	139	142	160	171	179	200	208	248	276	289				

GIRDER SPAN (ft)	JOIST SPACES (ft)	GIRDER DEPTH (in)	JOIST GIRDER WEIGHT -- POUNDS PER LINEAR FOOT																			
			LOAD ON EACH PANEL POINT -- KIPS															ASD		LRFD		
			6	8	10	12	14	16	18	20	22	24	26	28	30	35	40	45	50	55	60	65
			9	12	15	18	21	24	27	30	33	36	39	42	45	52.5	60	67.5	75	82.5	90	97.5
65	6N@ 10.83	52	30	39	45	54	61	69	78	83	95	97	115	116	122	137	157	174	192	208	227	240
		56	29	35	42	49	58	63	70	80	84	97	97	117	119	129	148	159	181	201	206	231
		60	29	34	41	50	56	64	71	76	82	92	98	99	111	117	139	150	173	190	198	212
		66	26	33	40	45	51	58	65	73	78	83	87	100	103	106	124	142	165	178	188	200
		72	27	32	37	43	49	54	60	68	76	80	87	89	93	97	117	129	147	164	171	186
	8N@ 8.12	52	38	44	58	66	74	83	97	115	127	129	141	153	161	174	195	234	249	262	286	
		56	34	43	52	63	74	83	97	105	118	129	131	143	151	168	183	209	231	251	277	286
		60	33	41	51	60	69	77	85	99	108	119	130	133	139	151	179	204	214	239	260	269
		66	33	42	49	56	63	75	80	89	101	110	122	124	135	141	170	190	204	229	244	252
		72	39	42	47	56	65	73	78	89	92	104	113	125	131	137	166	182	201	213	238	249
	9N@ 7.22	52	38	49	62	74	83	97	116	128	129	142	153	158	169	190	229	249	284			
		56	39	48	59	68	81	98	106	118	130	142	144	155	161	183	208	238	259	273		
		60	38	47	58	69	78	86	100	109	120	132	145	146	152	177	199	226	240	261	294	
		66	37	44	53	64	72	81	89	103	112	124	136	138	144	162	196	209	235	254	286	305
		72	35	44	52	62	71	79	91	91	108	115	127	140	140	153	182	195	225	249	266	285
	10N@ 6.50	52	41	58	67	82	97	116	128	131	154	155	168	180	191	233	245	276				
		56	40	52	68	77	91	107	119	132	144	151	165	175	181	208	238	262	289			
		60	40	51	61	74	87	100	109	122	134	146	162	172	182	199	228	254	280	298		
		66	39	50	60	72	82	90	103	113	125	138	140	163	169	183	218	245	263	274	296	
		72	37	47	56	67	76	87	93	110	127	129	141	143	146	165	202	219	241	252	293	
	11N@ 5.91	52	45	59	75	89	106	118	131	153	158	178	186	194	209	237	273					
		56	44	60	69	85	99	119	132	144	156	161	182	187	197	226	262	269				
		60	44	55	70	79	92	109	122	134	147	162	170	184	186	214	245	258				
		66	42	54	64	73	90	104	113	125	139	147	164	166	180	188	237	248	296			
		72	41	51	62	77	88	93	110	118	131	144	156	173	169	186	228	240	265	270		
	13N@ 5.00	52	55	72	89	106	130	142	156	169	180	194	208	231	248	267						
		56	53	69	86	99	120	133	146	161	171	186	202	218	242	257						
		60	50	64	77	93	108	131	134	158	164	180	188	201	220	245	299					
		66	49	62	75	87	102	122	134	137	161	167	179	195	205	233	277	290				
		72	46	58	72	85	90	113	127	138	141	170	171	174	187	194	251	256	314			
70	7N@ 10.00	56	30	39	46	56	64	71	83	88	102	102	110	121	136	167	178	203	218	244	257	275
		60	30	37	44	52	61	66	73	85	90	102	105	111	131	160	172	193	208	234	251	263
		66	30	35	44	51	58	67	73	75	87	93	104	106	122	145	164	176	190	208	233	240
		72	29	34	42	47	54	60	69	76	78	89	94	102	116	133	144	160	187	200	215	233
		78	28	34	40	47	50	58	63	71	78	83	90	96	109	119	139	151	179	190	201	208
		84	29	35	39	44	51	57	65	69	72	80	85	94	103	114	129	143	171	179	192	202
	9N@ 7.78	56	37	45	56	67	75	88	102	110	122	128	154	168	180	203	229	249	283			
		60	35	45	54	65	73	89	99	105	114	129	131	159	165	189	218	247	262	279		
		66	38	48	56	67	74	86	92	106	112	122	127	149	160	178	211	227	254	264	297	
		72	37	45	56	64	69	77	89	100	108	114	124	131	145	163	198	211	235	257	285	295
		78	36	45	53	60	66	76	87	93	102	110	116	118	140	153	183	201	225	250	267	282
		84	35	45	50	59	67	72	81	94	95	103	113	118	128	148	176	192	217	226	248	271
	10N@ 7.00	56	38	53	60	75	88	100	106	118	137	161	168	180	192	233	251	264				
		60	41	55	65	71	88	102	109	122	130	157	161	175	184	208	240	254	287			
		66	42	51	62	70	85	91	105	109	123	132	157	161	173	195	228	243	278	287		
		72	38	47	59	66	78	88	94	106	112	127	133	155	162	181	218	233	262	277		
		78	37	46	55	65	71	79	94	96	108	115	130	137	151	176	203	227	247	262	290	
		84	36	47	55	63	72	80	92	98	109	112	121	133	144	167	194	207	228	255	282	298
	11N@ 6.36	56	45	60	71	87	102	108	127	138	162	178	185	204	218	249	282					
		60	44	57	66	85	90	104	114	129	157	162	180	189	207	236	262	271				
		66	43	53	67	76	88	105	106	117	132	160	166	176	181	212	244	259	305			
		72	42	55	62	70	82	94	108	109	119	136	148	167	176	203	233	251	295	302		
		78	40	50	61	73	80	92	98	110	118	124	140	141	169	192	226	242	273	284	310	
		84	39	49	59	68	78	84	97	102	116	124	129	144	154	185	209	228	262	278	304	
	12N@ 5.83	56	50	63	76	88	103	113	129	157	170	181	194	207	234	253	293					
		60	46	58	74	89	103	112	128	139	161	179	183	196	207	248	284					
		66	45	55	67	78	92	105	115	130	143	164	175	186	199	241	267	279	308			
		72	42	55	65	77	89	102	107	119	135	148	168	173	189	215	247	264	298			
		78	42	51	64	72	84	97	106	113	123	141	151	167	179	201	229	256	279	308		
		84	40	51	61	73	83	89	102	115	118	128	144	151	171	192	221	249	274	298	314	
	14N@ 5.00	56	53	71	87	102	120	137	163	180	191	207	227	247	259	287						
		60	54	69	88	99	112	128	153	171	182	196	210	230	251	282						
		66	48	64	77	92	106	115	132	164	176	186	200	219	241	271	287					
		72	49	61	73	91	103	110	120	138	169	181	191	213	216	248	277					
		78	44	58	72	84	97	111	120	138	141	172	182	194	204	226	270	272				
		84	44	58	69	79	97	106	116	127	143	155	171	177	196	202	259	262	315			

GIRDER SPAN (ft)	JOIST SPACES (ft)	GIRDER DEPTH (in)	JOIST GIRDER WEIGHT -- POUNDS PER LINEAR FOOT																			
			LOAD ON EACH PANEL POINT -- KIPS														ASD		LRFD		
			6	8	10	12	14	16	18	20	22	24	26	28	30	35	40	45	50	55	60	65
			9	12	15	18	21	24	27	30	33	36	39	42	45	52.5	60	67.5	75	82.5	90	97.5
75	8N@ 9.38	56	40	49	61	73	82	95	115	116	128	140	152	156	166	186	219	245	261	275		
		60	38	48	58	70	80	92	97	116	118	130	142	153	158	177	206	234	251	263	280	
		66	35	44	53	64	72	82	98	99	118	120	132	144	152	169	186	207	234	244	269	289
		72	34	43	52	61	71	79	87	100	101	121	122	134	141	158	178	189	213	237	253	267
		78	34	43	54	61	69	77	81	89	103	105	123	125	131	150	168	183	207	218	246	261
	10N@ 7.50	60	42	59	69	83	98	117	129	131	154	159	170	182	194	234	247	277				
		66	42	55	69	78	87	100	119	132	134	153	163	174	184	207	241	265	292			
		72	42	54	63	73	86	101	111	123	136	138	154	163	176	194	228	256	280	289		
		78	39	48	63	74	82	91	105	114	127	139	152	157	165	177	221	237	261	278		
		84	39	49	59	69	78	94	95	110	128	131	143	156	150	166	197	225	247	267	293	
	12N@ 6.25	60	51	68	84	98	118	131	144	159	181	183	195	206	236	265						
		66	50	62	79	90	110	122	135	148	164	172	185	198	209	249	277					
		72	46	63	73	90	104	124	126	141	154	166	170	188	199	234	259	275				
		78	47	61	76	86	98	105	126	139	152	163	166	178	188	208	250	265	301			
		84	46	56	70	79	92	106	126	139	141	164	171	171	175	191	235	253	279	288		
	14N@ 5.36	66	56	72	89	111	125	137	160	171	184	199	209	232	241	270						
		72	52	70	84	101	121	134	148	166	179	190	202	221	233	260	297					
		78	53	68	80	98	107	125	139	151	174	183	192	215	225	249	277					
		84	52	64	79	92	108	127	130	153	171	179	186	196	204	227	271	284				
		90	50	66	77	94	110	119	142	144	173	176	178	179	197	203	260	275				
	15N@ 5.00	66	60	77	98	118	132	146	164	185	196	215	226	244	268	273						
		72	59	74	87	110	123	146	160	169	189	201	222	221	248	264	312					
		78	54	73	88	104	124	139	152	169	177	195	207	213	228	257	308					
		84	55	67	86	93	116	131	143	171	174	189	193	206	219	250	287	302				
		90	52	69	81	95	118	133	145	146	177	179	182	202	212	246	280	294				
80	8N@ 10.00	60	37	45	56	64	75	88	97	103	112	127	137	156	162	189	208	234	261	277		
		66	35	45	52	62	70	77	90	103	105	113	129	131	155	176	197	226	243	258	287	
		72	33	41	48	59	68	76	87	92	106	108	116	126	141	170	187	203	235	250	268	288
		78	33	41	47	56	64	73	81	88	94	109	111	118	136	156	178	195	216	238	255	269
		84	35	39	48	56	63	71	79	83	96	98	112	114	129	146	173	184	210	216	247	256
		90	56	57	58	63	70	79	79	90	95	103	105	118	127	134	169	179	205	210	243	252
	10N@ 8.00	60	41	53	68	76	97	103	112	129	139	159	180	191	195	234	255	267				
		66	39	52	62	75	90	100	107	115	132	154	167	178	187	210	245	257				
		72	43	55	63	74	87	97	106	120	127	151	161	171	182	195	238	252				
		78	42	51	63	71	86	90	100	112	122	130	155	166	176	187	229	245	281	290		
		84	42	51	61	70	78	91	100	109	115	125	131	157	166	178	222	230	256	277		
		90	40	49	60	68	77	87	92	102	111	118	132	136	160	169	197	221	239	261	293	
	12N@ 6.67	66	50	65	73	90	103	115	130	161	172	180	195	207	220	254	290					
		72	47	59	72	86	101	107	125	133	165	174	183	196	210	243	273					
		78	46	60	69	80	94	108	114	129	136	167	176	189	197	220	263	276				
		84	47	56	70	79	92	99	111	121	138	140	170	175	193	207	250	265	301			
		90	44	56	66	74	86	101	113	116	125	143	149	170	177	193	242	259	281	301		
		96	43	54	68	75	85	98	104	117	120	130	147	156	180	195	233	251	277	295	308	
	14N@ 5.71	66	57	73	89	103	113	129	160	182	186	207	221	231	262	288						
		72	54	67	79	101	106	125	143	165	184	198	211	224	243	277						
		78	50	66	78	95	109	118	136	149	173	191	197	216	226	266	297					
		84	50	64	74	92	99	112	124	143	169	177	191	203	218	250	276					
		90	48	61	74	86	100	115	121	136	146	172	181	195	208	227	264	275				
		96	47	61	74	84	100	108	118	127	145	152	177	181	201	215	258	266				
	16N@ 5.00	66	62	78	101	113	130	161	184	197	212	233	253	268	288	308						
		72	57	76	93	109	118	145	167	187	203	218	246	258	270	291						
		78	58	73	91	104	120	137	149	181	191	208	219	242	252	282						
		84	54	69	84	100	115	126	143	174	185	195	211	223	250	271	315					
		90	54	70	80	101	114	119	144	155	180	191	207	220	233	267	306					
		96	55	68	81	94	110	121	133	155	164	186	201	211	226	264	298	302				

GIRDER SPAN (ft)	JOIST SPACES (ft)	GIRDER DEPTH (in)	JOIST GIRDER WEIGHT -- POUNDS PER LINEAR FOOT																			
			LOAD ON EACH PANEL POINT -- KIPS														ASD		LRFD			
			6	8	10	12	14	16	18	20	22	24	26	28	30	35	40	45	50	55	60	65
			9	12	15	18	21	24	27	30	33	36	39	42	45	52.5	60	67.5	75	82.5	90	97.5
90	9N@ 10.00	72	46	55	64	81	92	98	117	119	141	143	159	160	182	202	233	238	287			
		84	48	50	60	75	84	88	102	121	124	135	148	154	165	180	218	228	254	286	298	
		90	56	57	62	72	85	88	99	105	125	128	138	152	159	174	211	218	251	272	294	
		96	57	58	64	69	80	91	98	107	110	128	131	142	155	170	199	208	246	263	290	302
		102	57	59	62	69	75	87	95	105	112	130	133	134	146	167	191	196	241	257	281	296
	10N@ 9.00	72	48	61	72	85	99	118	130	142	155	160	170	182	186	236	248	255				
		84	49	58	69	81	97	115	117	137	148	153	165	173	177	210	240	252	292	307		
		90	50	56	66	79	89	100	107	126	129	141	157	167	176	186	232	248	283	292		
		96	48	56	66	74	87	95	108	113	129	133	153	159	168	173	217	223	259	268		
		102	48	57	65	76	84	97	105	115	124	131	137	155	162	170	200	222	245	257	288	
	11N@ 8.18	72	51	65	78	99	119	120	143	150	172	182	188	208	219	240	273					
		84	50	62	74	87	100	113	126	138	150	166	177	192	194	215	258	288				
		90	51	59	72	85	93	107	128	129	142	158	170	182	188	204	250	272	291			
		96	53	60	71	81	95	105	113	132	134	148	167	174	183	194	242	266	296	310		
		102	57	61	70	82	94	101	116	124	138	150	163	167	177	191	235	254	278	292		
	12N@ 7.50	78	53	68	79	102	111	124	149	162	172	183	193	210	225	258	276					
		84	52	65	79	91	105	125	137	149	166	176	188	195	213	245	270	277				
		90	52	68	79	89	106	126	128	151	152	169	182	190	205	219	262	269				
		96	52	63	76	90	103	110	129	132	153	156	175	185	198	210	252	265	293			
		108	55	64	76	85	97	107	115	135	137	160	168	179	183	198	237	261	290	295		
	15N@ 6.00	78	66	82	99	121	145	148	179	188	201	216	237	252	270							
		84	62	76	97	122	125	149	169	183	192	204	220	247	252	296						
		90	60	78	90	106	127	140	153	178	183	200	213	221	249	284	308					
		96	58	72	93	108	129	131	154	173	176	196	198	218	226	272	300					
		108	59	72	87	101	115	136	139	168	172	183	186	206	218	263	275	299				
	18N@ 5.00	78	74	99	120	145	159	177	198	215	238	253	270	292								
		84	73	89	113	137	151	169	192	207	216	244	260	272	298							
		90	70	90	106	129	153	166	185	198	212	228	250	267	280							
		96	68	87	108	131	144	158	179	192	204	220	235	260	275	291						
		108	64	85	103	120	139	151	172	189	192	216	231	243	263	276						
100	10N@ 10.00	78	52	58	68	79	92	106	115	131	140	161	182	190	201	236	257	278				
		84	53	58	69	77	93	102	109	118	133	156	165	185	194	210	249	262	294			
		96	56	62	68	84	87	102	108	125	126	150	162	179	186	202	241	252	282			
		102	57	61	66	77	89	100	106	121	127	133	159	169	182	191	234	242	277			
		108	58	61	67	76	87	92	106	107	127	130	154	162	174	176	218	224	261	275		
	12N@ 8.33	78	56	70	86	97	112	124	158	173	182	188	209	222	241	254						
		84	55	68	84	98	107	126	133	163	176	185	191	211	224	243	287					
		96	55	66	75	91	102	111	116	131	158	179	184	196	209	232	270	286				
		102	55	62	73	90	95	113	118	133	141	174	179	191	204	222	257	272				
		108	55	62	72	85	97	106	117	123	139	149	175	186	199	200	248	260	299			
	15N@ 6.67	78	67	86	104	115	133	172	184	207	213	236	261	276	296							
		84	61	78	94	113	128	164	175	188	211	223	241	267	281							
		96	61	72	93	105	118	133	170	179	194	219	224	238	252	286						
		102	60	74	85	102	117	125	144	175	187	201	209	234	241	272	312					
		108	59	73	87	103	118	123	140	149	179	200	204	230	238	261	303					
	16N@ 6.25	84	69	80	106	117	133	164	188	202	214	237	257	268	293							
		96	63	75	98	115	124	140	173	195	200	220	239	245	268	302						
		102	62	74	97	111	118	136	154	178	196	210	224	237	252	292						
		108	62	76	87	104	118	129	148	173	192	202	216	230	246	280						
		120	64	76	86	104	116	128	140	161	188	190	211	219	243	270	303	309				
	17N@ 5.88	84	70	88	107	127	145	168	189	213	237	245	266	294	302							
		96	65	80	99	115	135	151	182	194	211	234	250	268	277	302						
		102	66	79	98	118	127	144	175	187	204	224	242	255	268	300						
		108	65	78	91	107	120	140	160	181	203	218	235	240	261	286						
		120	67	78	93	110	125	133	149	168	189	212	216	235	248	274						
	18N@ 5.56	84	70	94	109	134	164	187	203	215	238	261	282	292								
		96	65	84	100	120	140	172	195	208	221	247	268	276	293							
		102	66	84	102	118	137	154	189	201	215	230	253	269	284							
		108	68	82	104	119	130	148	182	195	206	224	244	263	268	285						
		120	69	84	98	113	129	142	163	192	197	219	236	251	265	278						
	20N@ 5.00	84	77	103	118	146	178	201	219	240	264	295										
		96	73	99	115	125	153	188	212	225	252	269	284	307								
		102	71	89	114	129	147	181	204	219	238	261	278	299	314							
		108	71	89	110	126	149	164	202	211	230	252	270	291	298							
		120	71	89	102	120	133	164	200	205	222	240	262	269	289	314						

GIRDER SPAN (ft)	JOIST SPACES (ft)	GIRDER DEPTH (in)	JOIST GIRDER WEIGHT -- POUNDS PER LINEAR FOOT																			
			LOAD ON EACH PANEL POINT -- KIPS														ASD		LRFD		
			6	8	10	12	14	16	18	20	22	24	26	28	30	35	40	45	50	55	60	65
			9	12	15	18	21	24	27	30	33	36	39	42	45	52.5	60	67.5	75	82.5	90	97.5
110	10N@ 11.00	84	61	69	82	94	100	120	143	144	160	172	184	188	209	236	266	271				
		96	63	69	81	91	98	107	125	142	154	166	181	184	201	208	261	264	297			
		108	64	69	75	86	95	105	113	131	133	160	171	181	185	190	248	252	288			
		114	67	72	76	86	96	108	115	133	136	154	158	173	182	188	238	242	280			
		120	66	72	76	83	90	100	111	128	137	140	157	166	176	177	230	238	274	278		
	12N@ 9.17	84	66	74	88	109	122	144	162	175	186	199	218	224	250	255						
		96	66	74	88	101	125	127	151	170	179	187	194	214	224	248	280					
		108	68	75	84	95	111	132	136	159	168	174	190	197	209	230	276	284				
		114	66	75	84	102	107	126	134	156	158	170	186	193	201	226	271	275				
		120	67	74	82	96	109	126	135	158	161	168	179	188	192	202	252	260	299			
	14N@ 7.86	84	71	84	102	123	147	160	182	186	208	222	244	271	274							
		96	69	83	100	124	136	150	165	178	191	213	223	236	257	264						
		108	69	78	99	108	128	142	155	174	186	197	210	220	239	260	304					
		114	69	79	93	105	124	133	157	167	182	194	202	212	230	257	298					
		120	69	80	90	106	126	135	158	160	179	189	198	204	226	234	294	310				
	16N@ 6.88	96	72	89	106	126	149	168	182	196	217	231	250	271	287							
		102	74	89	108	127	152	156	178	195	212	220	242	262	278							
		108	73	83	104	127	142	158	175	188	206	213	234	249	261	292						
		114	74	86	105	114	135	161	162	186	200	209	226	242	256	282						
		120	75	88	99	117	138	152	165	183	184	205	210	237	252	270						
	18N@ 6.11	96	77	99	125	148	167	190	208	215	240	257	284	297								
		102	80	101	127	139	153	182	204	210	232	247	273	290	299							
		108	77	94	111	131	157	174	198	207	224	241	264	279	293							
		114	79	97	113	134	159	163	192	204	218	238	258	272	285							
		120	79	91	110	136	152	166	185	197	209	235	241	266	272	288						
	20N@ 5.50	96	82	106	139	154	185	206	219	242	260	288	300									
		102	81	109	130	154	173	198	212	236	253	279	295	312								
		108	83	106	132	145	169	192	210	229	246	273	285	308								
		114	86	101	134	147	161	185	208	224	238	263	280	304								
		120	77	93	113	128	154	167	193	215	230	248	271	297	302							
120	10N@ 12.00	96	69	76	82	89	94	112	138	152	168	178	189	199	208	242	263	286				
		102	69	75	83	86	92	110	134	148	164	174	186	196	207	219	262	274				
		108	82	83	86	95	100	108	126	145	161	170	184	194	205	214	258	268				
		114	82	83	86	90	95	109	127	140	158	166	179	185	197	206	254	262				
		120	83	84	86	92	97	102	113	133	153	155	174	177	188	200	245	254	260			
	12N@ 10.00	96	71	82	90	100	125	130	168	177	188	198	220	238	254	296						
		102	72	80	88	101	116	130	156	167	184	190	203	223	240	282						
		108	72	81	90	99	105	128	134	159	181	188	196	214	226	268	298					
		114	71	82	87	95	106	121	135	155	168	187	188	208	218	252	286					
		120	72	80	88	93	107	123	133	138	163	185	187	201	211	226	269	276				
	15N@ 8.00	96	77	90	109	125	134	178	189	202	222	238	252	279	296							
		102	78	88	103	118	132	169	179	198	216	231	245	261	284							
		108	80	90	101	115	133	160	178	195	209	224	237	252	276							
		114	78	88	98	117	122	137	176	186	201	212	234	241	269	282						
		120	78	89	99	110	124	140	167	180	189	204	230	238	247	275						
	16N@ 7.50	96	80	90	109	128	163	175	192	213	238	249	268	283								
		102	78	92	110	120	137	172	191	206	228	240	262	282	296							
		108	80	90	100	120	133	168	184	199	220	231	246	269	287							
		114	81	91	101	117	135	145	180	197	202	228	238	255	281	288						
		120	79	90	99	118	126	147	177	190	199	225	228	245	265	278						
	18N@ 6.67	96	85	95	116	136	178	198	214	237	252	279	295									
		102	83	97	113	138	174	192	209	229	243	266	288									
		108	84	94	115	129	170	188	204	221	233	256	273	306								
		114	85	96	116	123	143	183	199	212	230	249	264	294	304							
		120	84	95	105	125	140	179	192	204	227	243	258	282	295							
	20N@ 6.00	96	89	110	130	166	189	213	237	254	280	296										
		102	87	105	123	150	182	209	230	245	269	288										
		108	88	101	121	142	174	205	223	239	255	284	302									
		114	87	103	119	138	176	201	215	230	254	281	295	309								
		120	90	102	121	133	150	186	208	223	242	263	288	305	310							
	24N@ 5.00	96	96	121	168	192	220	244	271	312												
		102	99	118	151	186	212	238	266	303												
		108	96	119	147	181	204	229	257	286	312											
		114	109	141	152	172	202	224	246	278	305											
		120	107	143	152	165	200	221	238	272	301											

NOTES

CODE OF STANDARD PRACTICE

FOR STEEL JOISTS AND JOIST GIRDERS

Adopted by the Steel Joist Institute April 7, 1931
Revised to Nov. 10, 2014 - Effective Jan.1, 2015

SECTION 1.
GENERAL

1.1 SCOPE

The practices and customs set forth herein are in accordance with good engineering practice, tend to ensure safety in steel joist and Joist Girder construction, and are standard within the industry. There shall be no conflict between this code and any legal building regulation. This code shall only supplement and amplify such laws. Unless specific provisions to the contrary are made in a contract for the purchase of steel joists or Joist Girders, this code is understood to govern the interpretation of such a contract.

1.2 APPLICATION

This Code of Standard Practice is to govern as a standard unless otherwise covered in the architects' and engineers' plans and specifications.

1.3 DEFINITIONS

Add-Load. A single vertical concentrated load that occurs at any one panel point along the joist chord. This load is in addition to any other gravity loads specified.

Bend-Check Load. A vertical concentrated load used to design the joist chord for the additional bending stresses resulting from this load being applied at any location between the joist panel points. This load shall already be accounted for in the specified joist designation load, uniform load, or Add-Load and is used only for the additional bending check in the chord and does not contribute to the overall axial forces within the joist. An ideal use of this is for incidental loads which have already been accounted for in the design loading but may induce additional bending stress due to this load occurring at any location along the chord.

Buyer. The entity that has agreed to purchase Material from the manufacturer and has also agreed to the terms of sale.

Erector. The entity that is responsible for the safe and proper erection of the materials in accordance with all applicable codes and regulations.

Material. Steel joists, Joist Girders and accessories as provided by the seller.

Owner. The entity that is identified as such in the contract documents.

Placement Plans. Drawings that are prepared depicting the interpretation of the contract document's requirements for the Material to be supplied by the Seller. These floor or roof plans are approved by the Specifying Professional, Buyer, or Owner for conformance with the design requirements. The Seller uses the information contained on these drawings for final material design. A unique piece mark number is typically shown for the individual placement of the steel joists, Joist Girders and accessories along with sections that describe the end bearing conditions and minimum attachment required so that material is placed in the proper location in the field.

Seller. A company certified by the Steel Joist Institute engaged in the manufacture and distribution of steel joists, Joist Girders and accessories.

Specifying Professional. The licensed professional who is responsible for sealing the building contract documents, that indicates that he or she has performed or supervised the analysis, design and document preparation for the structure and has knowledge of the load-carrying structural system.

Structural Drawings. The graphic or pictorial portions of the contract documents showing the design, location and dimensions of the work. These documents generally include plans, elevations, sections, details, connections, all loads, schedules, diagrams and notes.

1.4 DESIGN

In the absence of ordinances or specifications to the contrary, all designs prepared by the Specifying Professional shall be in accordance with the Steel Joist Institute Standard Specifications of latest adoption.

1.5 RESPONSIBILITY FOR DESIGN AND ERECTION

When material requirements are specified, the seller shall assume no responsibility other than to furnish the items listed in Section 5.2(a). When material requirements are not specified, the seller shall furnish the items listed in Section 5.2(a) in accordance with Steel Joist Institute Standard Specifications of latest adoption, and this code. Pertinent design information shall be provided to the seller as stipulated in Section 6.1. The seller shall identify material by showing size and type. In no case shall the seller assume any responsibility for the erection of the item furnished.

1.6 PERFORMANCE TESTS FOR OPEN WEB STEEL JOIST CONSTRUCTION

When a performance test on a joist is required, the following criteria shall be used:

a) The performance test load shall be the maximum factored uniformly distributed downward design load for the selected joist.

   (1) The TOTAL safe factored uniformly distributed load-carrying capacity tabulated in the Standard LRFD Load Table for the specific joist designation and span.

   (2) For a joist with factored loading conditions other than those found in the Standard LRFD Load Table, this is the LRFD Load Combination resulting in the highest uniformly distributed downward factored design load.

   (3) For a joist with loading conditions other than those found in the Standard ASD Load Table, this is the ASD Load Combination resulting in the highest uniformly distributed downward design load multiplied times 1.50.

b) Joist self-weight and the weight of all test materials shall be included in the calculation of applied performance test loading as appropriate for the joist during testing.

c) Loading shall be uniformly distributed across the full length of the joist top chord, and the load application shall maintain uniform distribution throughout the test. At any stage during the application of the test loading, the test load shall not be distributed in such a manner as to result in any joist component being subjected to a higher proportion of force than intended by the joist design.

d) If tested as a panel assembly, the joists shall be tested in pairs with deck, deck attachments, and bridging installed per the approved joist and deck Placement Plans. All bottom chord horizontal bridging rows shall be terminated by bracing back to the top chord of the adjacent joist or by a lateral restraint system which does not inhibit the vertical deflection of the test joist.

e) If tested singly in a load test machine apparatus, the joist chords shall be braced to prevent lateral movement, without inhibiting vertical displacement. The joist top chord shall have lateral braces located at equal spacing of no more than 36 inches (914 mm) on center. The joist bottom chord shall have lateral braces located, at a minimum, per the bottom chord bridging locations shown on the approved joist placement plan.

f) The performance test loading shall be applied at a rate of no greater than 25 plf per minute and shall be sustained for no less than 15 minutes. After the maximum test load has been removed for a minimum of 10 minutes, the remaining vertical displacement at midspan shall not exceed 20% of the vertical midspan deflection sustained under the full performance test load.

g) All costs associated with such testing shall be borne by the purchaser.

h) Joists that have been designed and manufactured and have satisfied the above performance test criteria shall be considered to satisfy the intent of the Steel Joist Institute Standard Specifications, and shall be considered acceptable for use in construction. No further proof of strength of individual joist components or connections is required.

SECTION 2.
JOISTS, JOIST GIRDERS, AND ACCESSORIES

2.1 STEEL JOISTS AND JOIST GIRDERS

Steel joists and Joist Girders shall carry the designations and meet the requirements of the Steel Joist Institute Standard Specifications of latest adoption.

K-Series, LH-Series, DLH-Series joists, and Joist Girders are furnished either underslung or square ended, with top chords either parallel, pitched one way or pitched two ways. It is not recommended that any Joist Girder, or any DLH-Series joist that exceeds 72 inches (1829 mm) in depth and has a span greater than 80 feet (24384 mm), be used in a bottom bearing configuration.

The steel joist or Joist Girder designation depth or nominal depth shall be the depth at midspan, except for double pitched joists which shall be the depth at the ridge. K-Series, LH-Series, DLH-Series joists, and Joist Girders shall be permitted to have either parallel chords or a top chord pitch of up to 1/2 inch per foot (1:24).

2.2 BEARING SEATS

Underslung types are furnished with minimum end bearing depths as shown in Table 2.2-1. A standard maximum joist bearing seat width (perpendicular to the joist length) is provided. This width shall be permitted to vary based on the joist design and joist manufacturer.

TABLE 2.2-1

STANDARD END BEARING SEAT DEPTH AND STANDARD MAXIMUM SEAT WIDTH		
JOIST SECTION NUMBER[1]	**MINIMUM BEARING DEPTH**	**MAXIMUM SEAT WIDTH[2]**
K1-12	2 ½" (64 mm)	6" (152 mm)
LH02-06	5" (127 mm)	6" (152 mm)
LH07-17, DLH10-17	5" (127 mm)	8" (203 mm)
JG	7 ½" (191 mm)	8" (203 mm)
LH/DLH18-25, JG[3]	7 ½" (191 mm)	13" (330 mm)
JG[4]	10" (254 mm)	13" (330 mm)

(1) **Last two digits of joist designation shown in Load Table.**
(2) **THE SEAT WIDTH MAY VARY BASED ON DESIGN.**
(3) **Joist Girders** with a self weight greater than 50 plf (0.73 kN/m).
(4) **Joist Girders** with a self weight equal to or greater than 150 plf (2.19 kN/m).

Joist Girder bearing seat widths vary depending on the Joist Girder size and shall be permitted to be up to 13" (330 mm) wide. The supporting structural member shall be made wide enough to accommodate the seat widths.

Where steel joists or Joist Girders are sloped, sloped end bearings may be provided where the slope exceeds 1/4 inch per foot (1:48). When sloped end bearings are required, the seat depths shall be adjusted to maintain the standard height at the shallow end of the sloped bearing. For Open Web Steel Joists, K-Series, bearing ends shall be permitted to not be beveled for slopes of 1/4 inch or less per foot (1:48). For sloped joist bearing seats refer to the sloped seat depth requirements of Table 2.2-2 and Table 2.2-3.

TABLE 2.2-2

SLOPED SEAT REQUIRMENTS FOR SLOPES 3/8":12 AND GREATER K-SERIES OPEN WEB STEEL JOISTS

LOW END W/OUT TOP CHORD EXTENSIONS

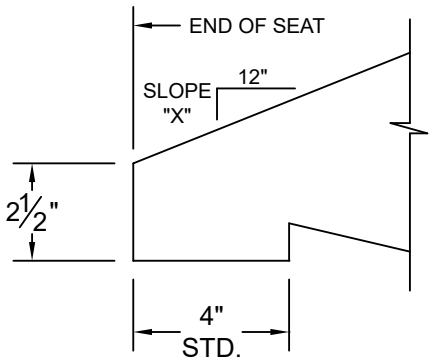

HIGH END W/OUT TOP CHORD EXTENSIONS

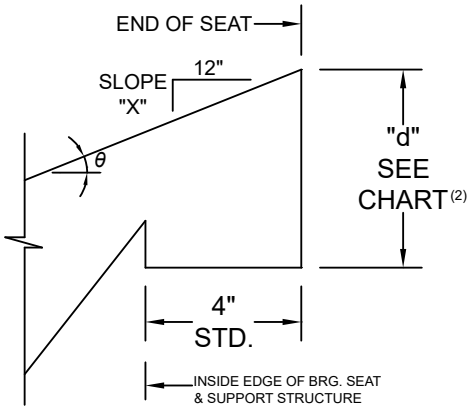

LOW END W/ TOP CHORD EXTENSIONS

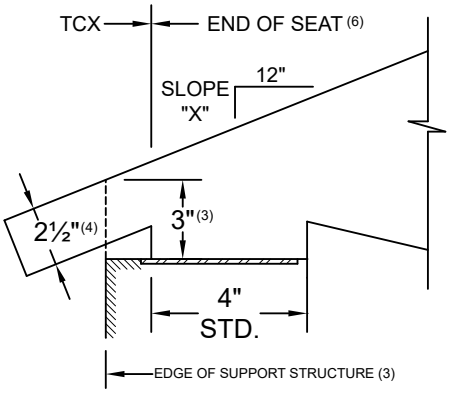

HIGH END W/ TOP CHORD EXTENSIONS

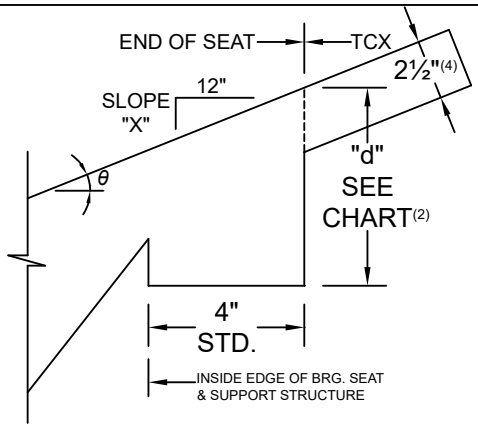

SLOPE "X":12	MINIMUM HIGH END SEAT DEPTH "d"
3/8	3 1/2
1/2	3 1/2
1	3 1/2
1 1/2	4
2	4
2 1/2	4
3	4 1/2
3 1/2	4 1/2
4	4 1/2
4 1/2	5
5	5
5 1/2	5 1/2
6	5 1/2
SEE NOTE (2) FOR SLOPE RATES GREATER THAN 6:12	

Notes:
(1) Depths shown are the minimum required for manufacturing of sloped seats. Depths may vary depending on actual bearing conditions.
(2) $d = 1/2 + 2.5/\cos\theta + 4\tan\theta$ (Rounded up to the nearest 1/2".)
(3) Clearance must be checked at outer edge of support. Increase bearing depths as required to allow passage of 2 1/2" deep extension.
(4) If extension depth greater than 2 1/2" is required, increase bearing depths accordingly.
(5) If slope is 1/4 : 12 or less, sloped seats are not required.
(6) Required bearing seat depth is determined at END OF SEAT.
(7) Also refer to SJI Specification 5.4 for special considerations of joist end reaction location.

TABLE 2.2-3

SLOPED SEAT REQUIRMENTS FOR SLOPES 3/8":12 AND GREATER LH- AND DLH-SERIES OPEN WEB STEEL JOISTS

LOW END W/OUT TOP CHORD EXTENSIONS

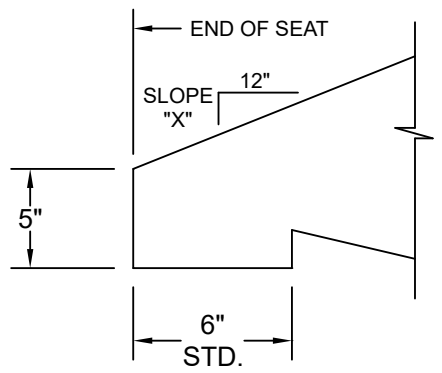

HIGH END W/OUT TOP CHORD EXTENSIONS

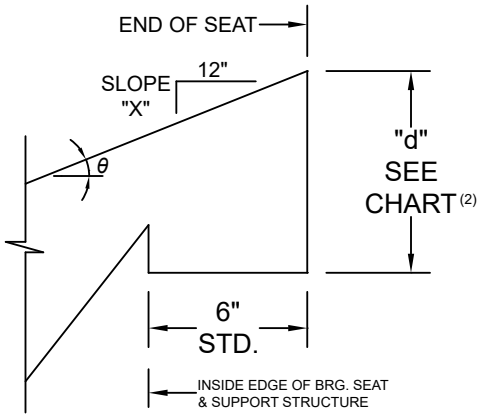

LOW END W/ TOP CHORD EXTENSIONS

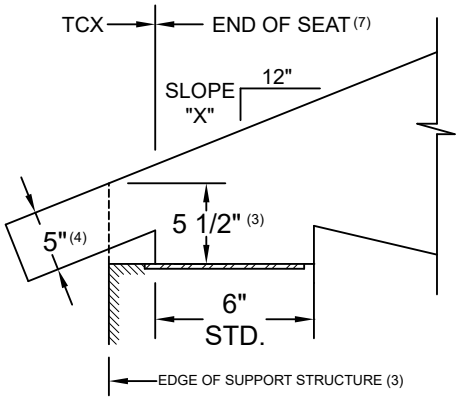

HIGH END W/ TOP CHORD EXTENSIONS

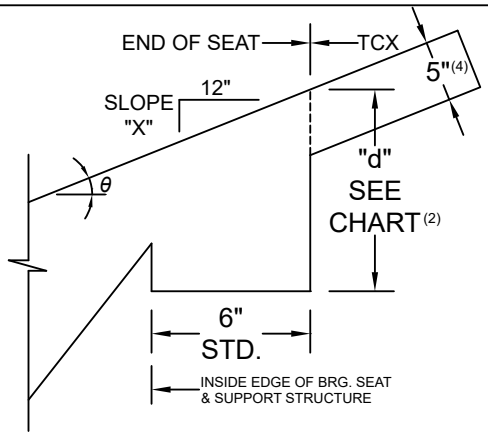

SLOPE "X" : 12	MINIMUM HIGH END SEAT DEPTH "d"
3/8	6
1/2	6
1	6 1/2
1 1/2	6 1/2
2	7
2 1/2	7
3	7 1/2
3 1/2	7 1/2
4	8
4 1/2	8 1/2
5	8 1/2
5 1/2	9
6	9 1/2
SEE NOTE (2) FOR SLOPE RATES GREATER THAN 6:12	

Notes:
(1) Depths shown are the minimum required for manufacturing of sloped seats. Depth may vary depending on actual bearing condition.
(2) $d = 1/2 + 5 / \cos\theta + 6 \tan\theta$
(3) Clearance must be checked at outer edge of support. Increase bearing seat depth as required to allow passage of 5" deep extension.
(4) If extension depth greater than 5" is required, increase bearing depths accordingly.
(5) Add 2 1/2" to seat depth at 18 thru 25 chord section numbers. Consult with joist manufacturer for information when TCXs are present.
(6) If slope is 1/4 : 12 or less, sloped seats may not required.
(7) Required bearing seat depth shall be determined at END OF SEAT.
(8) Also refer to SJI Specification 5.4 for special considerations of joist end reaction location.

2.3 JOIST LOCATION AND SPACING

The uniform loads as shown in the Standard Specifications Load Tables & Weight Tables of latest adoption shall be used to determine maximum joist spacing.

Where sidewalls, wall beams or tie beams are capable of supporting the floor slab or roof deck, the first adjacent joists should be placed one full space from these members. Joists are provided with camber and may have a significant difference in elevation with respect to the adjacent structure because of this camber. This difference in elevation shall be given consideration when locating the first joist adjacent to a side wall, wall beam, or tie beam.

K-Series Joists should be placed no closer than 6 inches (152 mm) to adjacent walls or structural members. LH-Series and DLH-Series Joists should be placed no closer than 12 inches (305 mm) to adjacent walls or structural members. Where partition walls are supported by parallel floor joists, there shall be at least one joist provided under each such partition, and more than one such joist shall be provided if necessary to safely support the weight of such partition and the adjacent floor. When partitions occur perpendicular to the joists, they shall be treated as concentrated loads on the supporting joists.

2.4 SPECIFYING DESIGN LOADS

Neither the Steel Joist Institute nor the joist manufacturer establishes the loading requirements for which structures are designed.

The *specifying professional* shall provide the nominal loads and load combinations as stipulated by the applicable code under which the structure is designed and shall provide the design basis (ASD or LRFD).

The *specifying professional* shall calculate and provide the magnitude and location of ALL JOIST and JOIST GIRDER LOADS. This includes all special loads (drift loads, mechanical units, net uplift, axial loads, moments, structural bracing loads, or other applied loads) which are to be incorporated into the joist or Joist Girder design. For Joist Girders, reactions from supported members shall be clearly denoted as point loads on the Joist Girder. When necessary to clearly convey the information, a load diagram or load schedule shall be provided.

The *specifying professional* shall give due consideration to the following loads and load effects:

- Ponded rain water.
- Accumulation of snow in the vicinity of obstructions such as penthouses, signs, parapets, adjacent buildings, etc.
- Wind and seismic forces. Indicate wind NET uplift in pounds per square foot (Pascals) and any other wind or seismic forces required to be incorporated into the joist or Joist Girder design. If applicable, make clear if loads specified are reduced (i.e. for ASD 0.6W=, 0.7E=) and provide any pertinent S_{DS} values. Connection details shall be designed by the *specifying professional*.
- Movable partitions. Convey any special deflection requirements as well as any stacked loading conditions.
- Type and magnitude of end moments and/or axial forces at the joist and Joist Girder end supports shall be shown on the Structural Drawings. For moment resisting joists or Joist Girders framing at or near the top of a column, due consideration shall be given to extend the column length to allow a plate type connection between the top of the joist or Joist Girder top chord and the column.
  Avoid transferring joist or Joist Girder end moments and axial forces through the bearing seat connection.
  A note shall be provided on the structural drawings stating that all moment resisting joists shall have all dead loads applied to the joist before the bottom chord struts are welded to the supporting connection whenever the design moments provided do not include dead load.
  The top and bottom chord moment connection details shall be designed by the *specifying professional*. The joist designer shall furnish the *specifying professional* with the joist detail information if requested. Additional design tools and details are available at the Steel Joist Institute's website, www.steeljoist.org.
- Joist chords shall not carry out-of-plane or torsional loads, such as from horizontal components of concentrated loads applied to laterally sloped joists, braces, screen walls, posts, etc. The structural contract drawings shall show the required structural bracing to resolve these forces.

Where concentrated loads occur, the magnitude and location of these concentrated loads shall be shown on the structural drawings when, in the opinion of the *specifying professional***,** they shall require consideration by the joist manufacturer. For nominal concentrated loads, which have been accounted for in the specified uniform design loads, a "strut" to transfer the load to a panel point on the opposite chord shall not be required provided that the sum of the concentrated loads within a chord panel does not exceed 100 pounds (445 N) and the attachments are concentric to the chord. When exact dimensional locations for concentrated loads which do not meet the above criteria are provided by the *specifying professional,* the joist shall be designed for the loads and load locations provided without the need for additional field applied web members at the specified locations.

(a) Specifying Joist Design Loads

The Steel Joist Institute Load Tables are based on uniform loading conditions and are valid for use in selecting joist sizes for gravity loads that can be expressed in terms of "pounds per linear foot" (kiloNewtons per meter) of joist.

For other loads, the Specifying Professional shall use one of the five options described below that allows:

- The estimator to price the joists.
- The joist manufacturer to design the joists in accordance with the Standard Specifications of latest adoption.
- The owner to obtain the most economical joists.

Option 1: Select a joist designation from the Standard Load Table (or specify a joist type using a uniform load in the designation) which has been determined to be adequate for all design loads. The shear and moment envelope resulting from the selected uniform load shall meet the actual shear and moment requirements. Thus, this option alone may not be adequate if large concentrated loads need to be designed for.

Option 2: Select a joist designation from the Standard Load Table (or specify a joist type using a uniform load in the designation) and also provide the load and location of any additional loads on the structural plan with a note "Joist manufacturer shall design joists for additional loads at locations shown." This option works well for a few added loads per joist with known magnitude and locations.

Option 3: For additional point loads with exact locations not known along the joist or for incidental loads, any one, or both, of the following can be specified on the structural plan in addition to option 1 or 2 above:

a) "**Design for a (__) lb. concentrated load located at any one panel point along the joist**". This is referred to as an *Add-Load*.

b) "**Design for additional bending stresses resulting from a (__) lb. concentrated load located at any location along (____) chord**". This is referred to as a *Bend-Check* and can be specified on the **top** chord, **bottom** chord, or **both top and bottom** chords. This can be used when the concentrated load is already accounted for in the joist designation, uniform load, or specified *Add-Load* yet this specified amount of load shall be permitted to also be located at any location between panel points. The additional bending stresses as a result of this load are then designed for. A *Bend-Check* load shall not exceed (*Add-Load* + 400 lbs.) A *Bend-Check* load can be specified by itself without an *Add-Load*.

c) Both (a) and (b) above can be specified with equal concentrated loads for each; or simply denote **"Design joist for a (__) lb. concentrated load at any location along the (___) chord."**

Example uses:

- *Specifying professional* selects a standard joist capable of carrying a 500 lb. RTU. However, the location and exact frame size is not yet known but the frame load shall result in two- 250 lb. point loads at least 5'-0" apart. **Specify a 250 lb. *Bend-Check.***
- Standard joist specified but not selected for 500 lb. RTU load, location not known. **Specify a 500 lb. *Add-Load* and 250 lb. *Bend-Check*.**
- Standard SJI joist selected to carry collateral load of 3 psf. *Specifying professional* wants bending from 150 lb. incidental loads to also be designed for**. Specify a 150 lb. *Bend-Check*.**

Option 4: Select a KCS joist using moment and end reaction without specifying added loads or diagrams. This option works well for concentrated loads for which exact locations are not known or for multiple loading.

a) Determine the maximum moment.

b) Determine the maximum end reaction (shear).

c) Select the required KCS joist that provides the required moment and end reaction (shear). Note that the top chord end panel is designed for axial load based on the force in the first tension web, that is based on the specified end reaction. A uniform load of 825 plf (12030 N/m) LRFD or 550 plf (8020 N/m) ASD is used to check end panel bending. If the end panel loading exceeds this, reduce the joist spacing or go to Option 5.

d) Specify on the structural drawings that an extra web shall be field applied at all concentrated loads not occurring at panel points.

OPTION 4 - ASD EXAMPLE 1:	**OPTION 4 - LRFD EXAMPLE 1:**
U.S. CUSTOMARY UNITS AND (METRIC UNITS)	**U.S. CUSTOMARY UNITS AND (METRIC UNITS)**
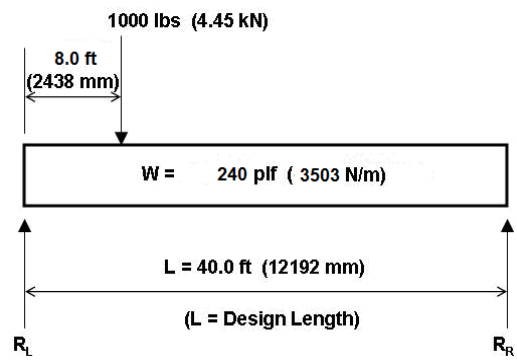	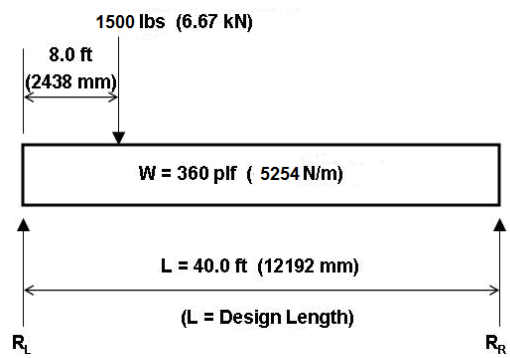
M = 625 k-in. (70.6 kN-m) R_L = 5600 lbs (24.9 kN), R_R = 5000 lbs (22.2 kN) Select a 22KCS3, M = 658 k-in. (74.3 kN-m) R = 6600 lbs (29.3 kN) Bridging section no. 9 for L = 40 ft. (12192 mm) Use 22K9 to determine bridging and stability requirements. Since a standard KCS Joist can be selected from the load table a load diagram is not required.	M = 938 k-in. (105.9 kN-m) R_L = 8400 lbs (37.37 kN), R_R = 7500 lbs (33.36 kN) Select a 22KCS3, M = 987 k-in. (111.5 kN-m) R = 9900 lbs (44.0 kN) Bridging section no. 9 for L = 40 ft. (12192 mm) Use 22K9 to determine bridging and stability requirements. Since a standard KCS Joist can be selected from the load table a load diagram is not required.

OPTION 4 - ASD EXAMPLE 2:	**OPTION 4 - LRFD EXAMPLE 2:**
U.S. CUSTOMARY UNITS AND (METRIC UNITS)	**U.S. CUSTOMARY UNITS AND (METRIC UNITS)**
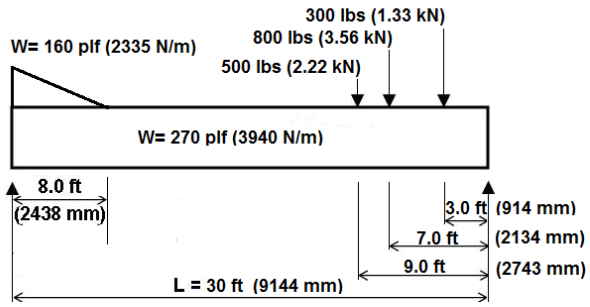	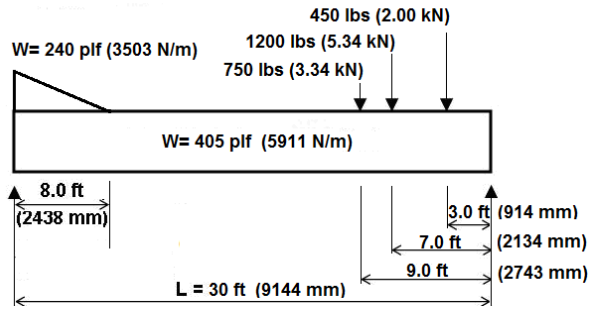
M = 443 k-in. (50.1 kN-m) R_L = 5000 lbs (22.24 kN), R_R = 5340 lbs (23.75 kN) Select a 22KCS2, M = 488 k-in. (55.1 kN-m) R = 5900 lbs (26.2 kN) Bridging section no. 6 for L = 30 ft. (9144 mm) Use 22K6 to determine bridging and stability requirements. Since the maximum uniform load of 430 plf [6275 N/m) (270 plf (3940 N/m) + 160 plf (2335 N/m)] does not exceed the maximum KCS Joist uniform load of 550 plf (8020 N/m) and a standard KCS Joist can be selected from the load table, a load diagram is not required.	M = 664 k-in. (75.03 kN-m) R_L = 7500 lbs (33.36 kN), R_R = 8010 lbs (35.63 kN) Select a 22KCS2, M = 732 k-in. (82.64 kN-m) R = 8850 lbs (39.3 kN) Bridging section no. 6 for L = 30 ft. (9144mm) Use 22K6 to determine bridging and stability requirements. Since the maximum ***factored*** uniform load of 645 plf (9413 N/m) (405 plf (5911 N/m) + 240 plf (3503 N/m)) does not exceed the maximum KCS Joist uniform load of 825 plf (12030 N/m) and a standard KCS Joist can be selected from the load table, a load diagram is not required.

OPTION 4 - ASD EXAMPLE 3:	**OPTION 4 - LRFD EXAMPLE 3:**
U.S. CUSTOMARY UNITS AND (METRIC UNITS)	**U.S. CUSTOMARY UNITS AND (METRIC UNITS)**
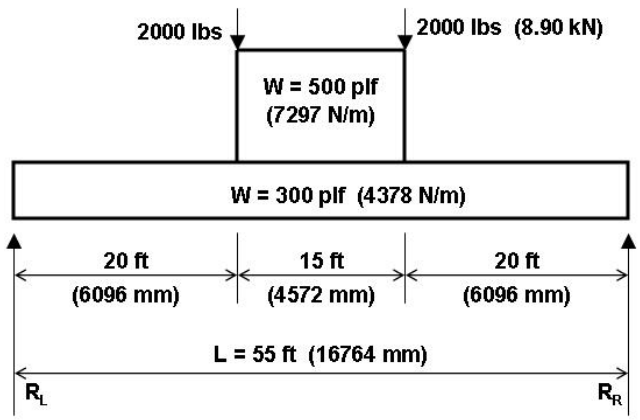	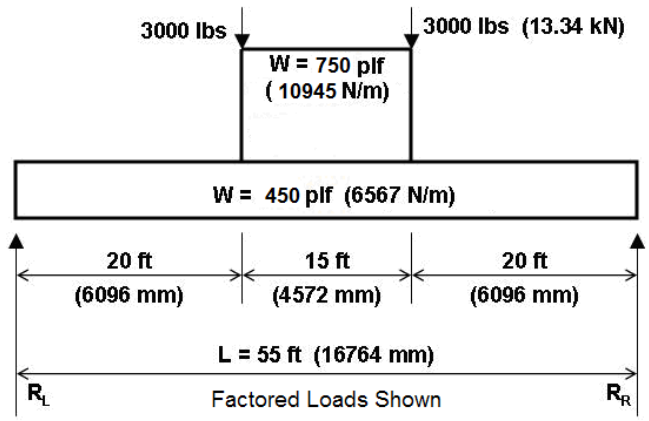
M = 2910 k-in. (328.8 kN-m) R_L = R_R = 14000 lbs (62.28 kN) EXCEEDS CAPACITY OF 30KCS5 (MAXIMUM KCS JOIST) AND EXCEEDS MAXIMUM UNIFORM LOAD OF 550 plf (8027 N/m). **OPTION A:** Use double joists each having a minimum moment capacity, M = 1455 k-in. (164.4 kN-m) and shear capacity, R = 7000 lbs (31.14 kN) and a uniform load of 400 plf (5838 N/m). Select two 28KCS5, M = 1704 k-in. (192.5 kN-m), R = 9200 lbs (40.9 kN). Bridging section no. 12 for L = 55 ft. (16764 mm). Use 28K12 to determine bridging and stability requirements. **OPTION B:** Select a LH-Series Joist. See OPTION 5.	M = 4365 k-in. (493.2 kN-m) R_L = R_R = 21000 lbs (93.41 kN) EXCEEDS CAPACITY OF 30KCS5 (MAXIMUM KCS JOIST AND EXCEEDS MAXIMUM ***FACTORED*** UNIFORM LOAD OF 825 plf (12040 N/m). **OPTION A:** Use double joists each having a minimum moment capacity, M = 2183 k-in. (246.65 kN-m) and shear capacity, R = 10500 lbs (46.71 kN) and a uniform load of 600 plf (8756 N/m). Select two 28KCS5, M = 2556 k-in. (288.7 kN-m), R = 13800 lbs (61.3 kN). Bridging section no. 12 for L = 55 ft. (16764 mm) Use 28K12 to determine bridging and stability requirements. **OPTION B:** Select a LH-Series Joist. See OPTION 5.

Option 5: Specify a SPECIAL joist designation when the joist includes more complex loading or for conditions which need consideration of multiple potentially controlling load combinations.

a) Provide a load diagram and/or enough information on the drawings to clearly define ALL loads.

b) If the loading criteria are too complex to adequately communicate on the drawings or with a simple load diagram, then the *specifying professional* shall provide a load schedule along with the appropriate load combinations. Regardless of where the loads are shown, unfactored design loads broken down by load categories shall be provided in order to design the joists correctly with applicable load combinations.

   Place the designation (e.g. 28K SP or 28LH SP) with the following note: “Joist manufacturer to design joist to support loads as shown.”

OPTION 5 - ASD EXAMPLE:	OPTION 5 - LRFD EXAMPLE:
U.S. CUSTOMARY UNITS AND (METRIC UNITS)	**U.S. CUSTOMARY UNITS AND (METRIC UNITS)**
Load diagram per ASCE 7 2.4.1(3), D + S	**Unfactored Load diagram per ASCE 7 2.3.2(3), 1.2D+1.6S**
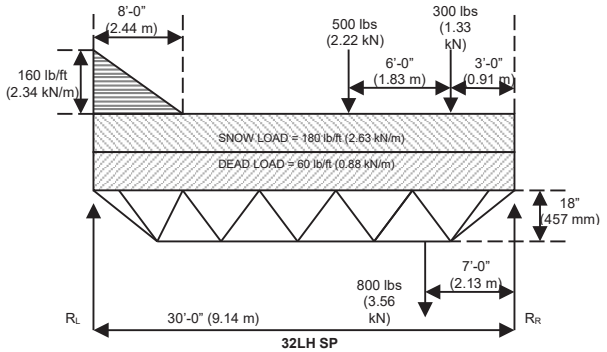 Joist manufacturer to design joist to support loads as shown above.	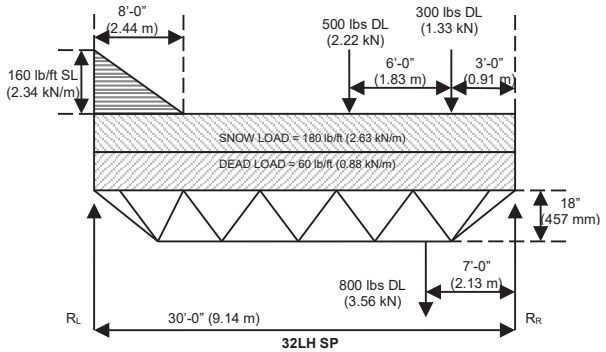 Joist manufacturer to design joist to support **unfactored** loads as shown above.
PLEASE NOTE THE LOAD COMBINATIONS SHOWN ARE FOR REFERENCE EXAMPLES ONLY.	

CAUTION FOR OPTIONS 1 thru 5 ABOVE:

If a K-Series joist is being specified, the Specifying Professional shall compare the equivalent uniform loads derived from the maximum moment and shear to the uniform loads tabulated in the K-Series Load Table. An equivalent unfactored uniform load in excess of 550 plf (8020 N/m) or a maximum unfactored end reaction exceeding 9200 lbs. (40.9 kN) indicates that the *specifying professiona*l shall use additional joists to reduce the loading or use an LH-Series joist and make provisions for 5 inch (127 mm) deep bearing seats.

If the joist has not been designed for localized accumulation of loads that results in a point or concentrated load, this load attachment shall be made at top or bottom chord panel points. Therefore, specify on the structural drawings, "Where concentrated loads do not occur at panel points, an extra web shall be field applied from the point of attachment to a panel point on the opposite chord", and indicate the extra web size and weld requirements. When exact dimensional locations for concentrated loads are provided by the *specifying professional*, the joist shall be designed for the loads and load locations provided without the need for additional field applied web members at the specified locations.

(b) Specifying Joist Girder Design Loads

The Steel Joist Institute's Design Guide ASD or LRFD Weight Tables for Joist Girders are based on uniformly spaced panel point loading conditions and are valid for use in selecting Joist Girder sizes for gravity conditions that can be expressed in kips (kiloNewtons) per panel point on the Joist Girder. Note that anything other than point loads shall be shown unfactored or in a Load Schedule. For a given Joist Girder span, the *specifying professional* first determines the number of joist spaces. Then the panel point loads are calculated and a depth is selected. The information provided in the tables gives the Joist Girder weight in pounds per linear foot (kiloNewtons per meter) for various depths and loads.

1. The purpose of the Joist Girder Design Guide Weight Table is to assist the *specifying professional* in the selection of a roof or floor support system.
2. It is not necessary to use only the depths, spans, or loads shown in the tables.
3. Holes in chord elements present special problems that shall be considered by both the *specifying professional* and the Joist Girder Manufacturer. The sizes and locations of such holes shall be clearly indicated on the structural drawings.
4. Live load deflection rarely governs because of the relatively small span to depth ratios of Joist Girders. However, it is recommended that a breakdown of the point loads, by load category (i.e. TL/LL), be provided so specified deflection requirements and load combinations can be properly accounted for in design.

Example using *Allowable Strength Design (ASD)* and U. S. Customary units:

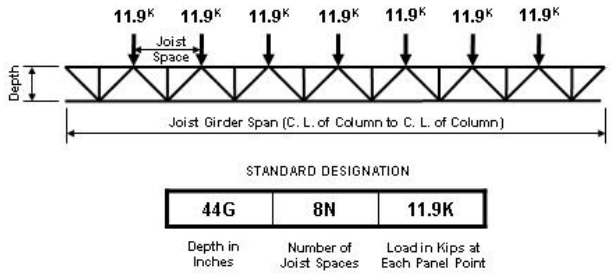

Given 42'-0" x 50'-0" bay. Joists spaced on 5'-3" centers

Live Load = 30 psf

Dead Load = 15 psf

(includes the approximate Joist Girder weight)

Total Load = 45 psf

Note: Web configuration may vary from that shown. Contact joist manufacturer if exact layout must be known.

1. Determine number of actual joist spaces (N). In this example, N = 8.
2. Compute total load:

   Total load = 5.25 x 45 psf = 236.25 plf
3. Joist Girder Section: (Interior)
   a) Compute the concentrated load at top chord panel points

      P = 236.25 x 50 = 11,813 lbs = 11.9 kips (use 12K for depth selection).
   b) Select Joist Girder depth:

      Refer to the ASD Joist Girder Design Guide Weight Table for the 42'-0" span, 8 panel, 12.0K Joist Girder. The rule of about one inch of depth for each foot of span is a good compromise of limited depth and economy. Therefore, select a depth of 44 inches.
   c) The Joist Girder shall then be designated 44G8N11.9K.
   d) The ASD Joist Girder Design Guide Weight Table shows the weight for a 44G8N12K as 49 pounds per linear foot. The designer should verify that the weight is not greater than the weight assumed in the Dead Load above.

Example using *Load and Resistance Factor Design (LRFD)* and U. S. Customary units:

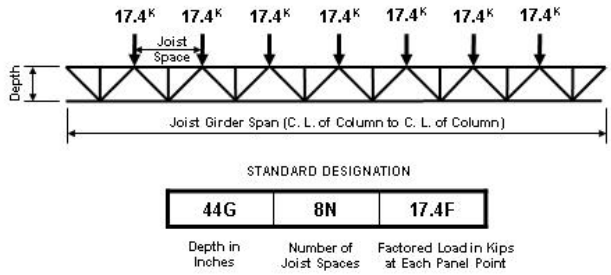

Given 42'-0" x 50'-0" bay. Joists spaced on 5'-3" centers

Live Load = 30 psf x 1.6

Dead Load = 15 psf x 1.2

(includes the approximate Joist Girder weight)

Total Load = 66 psf (factored)

Note: Web configuration may vary from that shown. Contact joist manufacturer if exact layout must be known.

1. Determine number of actual joist spaces (N). In this example, N = 8.
2. Compute total factored load:

   Total load = 5.25 x 66 psf = 346.50 plf
3. Joist Girder Section: (Interior)
   a) Compute the factored concentrated load at top chord panel points

      P = 346.5 x 50 = 17,325 lbs = 17.4 kips (use 18K for depth selection).
   b) Select Joist Girder depth:

      Refer to the LRFD Joist Girder Design Guide Weight Table for the 42'-0" span, 8 panel, 18.0K Joist Girder. The rule of about one inch of depth for each foot of span is a good compromise of limited depth and economy. Therefore, select a depth of 44 inches.
   c) The Joist Girder shall then be designated 44G8N17.4F. Note that the letter "F" is included at the end of the designation to clearly indicate that this is a factored load.
   d) The LRFD Joist Girder Design Guide Weight Table shows the weight for a 44G8N18.0F as 49 pounds per linear foot. The designer should verify that the weight is not greater than the weight assumed in the Dead Load above.

e) Check live load deflection: Live load = 30 psf x 50 ft. = 1500 plf Approximate Joist Girder moment of inertia = 0.027 NPLd = 0.027 x 8 x 11.9 x 42 x 44 = 4750 in.^{4} Allowable deflection for plastered ceilings = L/360 = $\frac{42(12)}{360} = 1.40$ in. $\Delta = 1.15\left[\frac{5wL^4}{384EI}\right] = \frac{1.15(5)(1.500/12)[(42)(12)]^4}{384(29000)(4750)}$ = 0.88 in. <1.40 in., Okay	e) Check live load deflection: Live load = 30 psf x 50 ft. = 1500 plf Approximate Joist Girder moment of inertia = 0.018 NPLd = 0.018 x 8 x 17.4 x 42 x 44 = 4630 in.^{4} Allowable deflection for plastered ceilings = L/360 = $\frac{42(12)}{360} = 1.40$ in. $\Delta = 1.15\left[\frac{5wL^4}{384EI}\right] = \frac{1.15(5)(1.500/12)[(42)(12)]^4}{384(29000)(4630)}$ = 0.90 in. <1.40 in., Okay

(c) Load Schedule Example

LOAD SCHEDULE (all loads are to be shown as unfactored)

MARK	DESIGNATION(1) (TL/LL) Joists: (plf) Girders: (kips)	LOADING(2)		W WIND		ADD-LOAD(6)	BEND-CHECK(7)		REMARKS
		DL(3) (plf)	LL(4) or L_r/S/R (plf)	DOWN WARD (plf)	NET(5) UPLIFT (plf)	TL/LL (kips/kips)	D TC (kips)	D BC (kips)	
J1	18KSP	120	185		180	1.0/0.6		0.3	Axial Loads
J2	24K7SP	85	155						Wind Moments
J3	28LHSP	110	355	95	175	0.5			Drift Loads, see diagram
G1	36G5N6.5K/3.5K				360				End Moments

(1) Joist designation loads include all uniform gravity loads. **Provide both Total and Live loads.**

(2) Loading values are not required if designation loading values are correct for deflection and load combinations.

(3) When standard SJI designations are used, the design Dead Load is required for load combinations with Wind or Seismic.

(4) The Floor or Roof Live load, Snow, or Rain load.

(5) When Net Uplift is specified for simple loading, it shall already take into account possible reduced Dead Loading present in order to create the largest Net uplift load combination. For more complex loading or when the Dead Load varies greatly for use in load combinations below, ***Gross*** uplift should be specified with the minimum and maximum Dead Loading values clearly defined. If the uplift cannot be assigned in pounds per lineal foot, a diagram can be shown for joist loading using pounds per square foot.

(6) A concentrated load applied at any panel point on both the top chord and bottom chord.

(7) Chord members shall be designed for additional bending stresses created by this concentrated Total load.

When in-plane moments (wind load, seismic load) are specified, continuity moments (live load) **shall** also be specified. A Load Schedule that shows a complete breakdown of all loads by Load Category may be required.

AXIAL and END MOMENT LOAD SCHEDULE

MARK	DESIGNATION (TL/LL) Joists: (plf) Girders: (kips)	MIN. I (in.^{4})	AXIAL			END MOMENTS								TRANSFER DETAILS @ GRIDS
			W WIND (kips)	E SEISMIC (kips)	E_m (kips)	LIVE LOAD CONTINUITY MOMENTS (k-ft.)		LATERAL MOMENTS (k-ft.)						
								W WIND		E		E_m		
						LEFT	RIGHT	LEFT	RIGHT	LEFT	RIGHT	LEFT	RIGHT	
J1	18KSP		W=18.0	E=21.8										9/S8 @ 4
J2	24K7SP					40	40	35	35					
G1	36G5N6.5K/3.5K	985				75	95	55	60					11/S8 @ B,C

When special loads as shown in the tables above are specified, the load combinations to be used for joist and Joist Girder design **shall** be provided. Two examples showing how to list load combinations are shown below:

LRFD example- Basic Load Combinations	**ASD example** - Basic Load Combinations
1. 1.4D	1. D
2. 1.2D + 1.6L + 0.5(L_r or S or R)	2. D + L
3. 1.2D + 1.6(L_r or S or R) + (1.0L or 0.5W)	3. D + (L_r or S or R)
4. 1.2D + 1.0W + 1.0L + 0.5(L_r or S or R)	4. D + 0.75L + 0.75(L_r or S or R)
5. 1.2D + 1.0E + 1.0L + 0.2S	5. D + (0.6W or 0.7E)
6. 0.9D + 1.0W	6a. D + 0.75L + 0.75(0.6W) + 0.75(L_r or S or R)
7. 0.9D + 1.0E	6b. D + 0.75L + 0.75(0.7E) +0.75S
	7. 0.6D + 0.6W
	8. 0.6D + 0.7E
Special Seismic Load Combinations	Special Seismic Load Combinations
8. (1.2 + 0.2S_{DS})D + E_h + L + 0.2S	9. (1.0 + 0.14S_{DS})D + 0.7E_h
9. (0.9 – 0.2S_{DS})D + E_h	10. (1.0 + 0.105S_{DS})D + 0.525E_h + 0.75L + 0.75(L_r or S or R)
	11. (0.6 – 0.14S_{DS})D + 0.7E_h

2.5 JOIST AND JOIST GIRDER EXTENSIONS

Steel joist and Joist Girder extensions shall be specified and designed in accordance with the requirements of the Steel Joist Institute Standard Specifications of latest adoption.

.

2.6 CEILING EXTENSIONS

Ceiling extensions shall be furnished to support ceilings that are to be attached directly to the bottom of the joists. They are not furnished for the support of suspended ceilings. The ceiling extension shall be either an extended bottom chord element or a loose unit, whichever is standard with the manufacturer, and shall be of sufficient strength to properly support any specified ceiling loads.

2.7 BRIDGING AND BRIDGING ANCHORS

(a) Bridging standard with the manufacturer and complying with the Steel Joist Institute Standard Specifications of latest adoption shall be used for bridging all joists furnished by the joist manufacturer. Positive anchorage shall be provided at the ends of each bridging row at both top and bottom chords.

(b) For K-Series and LH-Series joists, horizontal bridging is recommended for spans up to and including 60 feet (18288 mm) except where the Steel Joist Institute Standard Specifications Load Tables & Weight Tables require bolted diagonal bridging for erection stability.

LH-Series and DLH-Series joists exceeding 60 feet (18288 mm) in length shall have bolted diagonal bridging for all rows.

Refer to Section 5.5 in the Steel Joist Institute Standard Specification for erection stability requirements.

Refer to Appendix B for OSHA steel joist erection stability requirements.

Horizontal bridging shall consist of continuous horizontal steel members designed per Section 5.5 in the Steel Joist Institute Standard Specifications. The material sizes listed in Table 2.7-1 meet the requirements of the specifications. Alternately, or for “load/length” designation joists, Table 2.7-2 provides the maximum horizontal bridging force, P_{br}, for various combinations of joist spacing and bridging angle size.

(c) Diagonal cross bridging consisting of angles or other shapes connected to the top and bottom chords of K-Series, LH-Series, and DLH-Series joists shall be used when required by the Steel Joist Institute Standard Specifications of latest adoption.

Diagonal bridging, when used, shall be designed per Section 5.5 in the Steel Joist Institute Standard Specifications.

When the bridging members are connected at their point of intersection, the material sizes listed in Table 2.7-3 and Table 2.7-4 meet the requirements of the specifications.

For LH-Series and DLH-Series joists, where the joist spacing is less than 70 percent of the joist depth, bolted horizontal bridging shall be provided in addition to the diagonal bridging, as shown in Table 2.7-4.

(d) When bolted diagonal erection bridging is required, the following shall apply:

1. The bridging shall be indicated on the joist placement plans.
2. The joist placement plans shall be the exclusive indicator for the proper placement of this bridging.
3. Shop installed bridging clips, or functional equivalents, shall be provided where the bridging bolts to the steel joist.
4. When two pieces of bridging are attached to a steel joist by a common bolt, the nut that secures the first piece of bridging shall not be removed from the bolt for the attachment of the second piece.
5. Bridging attachments shall not protrude above the top chord of the steel joists.
6. See Table 2.7-5 for bolt sizes that meet the connection requirements of the Steel Joist Institute Standard Specifications Section 5.5.

TABLE 2.7-1

MAXIMUM JOIST SPACING FOR HORIZONTAL BRIDGING

SPANS OVER 60 ft. (18.3 m) REQUIRE BOLTED DIAGONAL BRIDGING

JOIST SECTION NUMBER[1]	Nominal Unfactored Force P_{br} lbs (N)	BRIDGING MATERIAL SIZE[2] Equal Leg Angles					
		1 x 7/64 (25 x 3 mm) r = 0.20" (5.08 mm)	**1-1/4 x 7/64 (32 x 3 mm) r = 0.25" (6.35 mm)**	**1-1/2 x 7/64 (38 x 3 mm) r = 0.30" (7.62 mm)**	**1-3/4 x 7/64 (45 x 3 mm) r = 0.35" (8.89 mm)**	**2 x 1/8 (52 x 3 mm) r = 0.40" (10.16 mm)**	**2-1/2 x 5/32 (64 x 4 mm) r = 0.50" (12.70 mm)**
		ft.-in. (mm)	ft.-in. (mm)	ft.-in. (mm)	ft.-in. (mm)	ft.-in. (mm)	ft.-in. (mm)
K1 – 8	340 (1512)	5'-0" (1524)	6'–3" (1905)	7'–6" (2286)	8'-9" (2667)	10'–0" (3048)	12'–6" (3810)
K9-10, LH02-03	450 (2002)	4'-4" (1321)	6'-1" (1854)	7'–6" (2286)	8'–9" (2667)	10'–0" (3048)	12'–6" (3810)
K11-12, LH04-05	560 (2491)	3'–11"(1194)	5'–6" (1676)	7'–4" (2235)	8'–9" (2667)	10'–0" (3048)	12'–6" (3810)
LH06-08	750 (3336)		4'–9" (1448)	6'–3" (1905)	7'–11" (2413)	10'–0" (3048)	12'–6" (3810)
LH09	850 (3781)		4'–5" (1346)	5'–10" (1778)	7'–5" (2261)	9'–9" (2972)	12'–6" (3810)
LH/DLH10	900 (4003)		4'–4" (1321)	5'–8" (1727)	7'–3" (2210)	9'–5" (2870)	12'–6" (3810)
LH/DLH11	950 (4226)		4'–2" (1270)	5'–7" (1702)	7'–0" (2134)	9'–2" (2794)	12'–6" (3810)
LH/DLH12	1100 (4893)		3'-11" (1194)	5'–2" (1575)	6'–8" (2032)	8'–6" (2591)	12'-6" (3810)
LH/DLH13	1200 (5338)		3'-9" (1143)	4'–11" (1499)	6'–3" (1905)	8'-2" (2489)	12-6" (3810)
LH/DLH14	1300 (5783)			4'-9" (1448)	6'-0" (1829)	7'-10" (2388)	12'-4" (3759)
LH/DLH15	1450 (6450)			4'-6" (1372)	5'-8" (1727)	7'-5" (2261)	11'-8" (3556)
LH/DLH16–17	1850 (8229)			4'-0" (1219)	5'-0" (1524)	6'-7"(2007)	10'-4" (3150)
LH/DLH18–20	2350 (10453)			3'-7" (1067)	4'-4" (1321)	5'-10" (1778)	9'-1" (2769)
LH/DLH21–22	3150 (14012)				3'-10" (1168)	5'-0" (1524)	7'-11" (2413)
LH/DLH23–24	4130 (18371)				3'-4" (1016)	4'-5" (1346)	6'-11" (2108)
LH/DLH25	4770 (21218)					4'-1"(1245)	6'-5" (1956)

(1) Refer to last two digit(s) of Joist Designation
(2) Connection to joist shall resist force listed in the Steel Joist Institute Standard Specifications Table 5.5-2

TABLE 2.7-2

MAXIMUM BRIDGING FORCE (P_{br}) FOR HORIZONTAL BRIDGING (lbs)							
JOIST SPACING (ft.-in.)	BRIDGING ANGLE SIZE (EQUAL LEG ANGLE)						
	1 x 7/64 r = 0.20"	1¼ x 7/64 r = 0.25"	1½ x7/64 r = 0.30"	1¾ x 7/64 r = 0.35"	2 x 1/8 r = 0.40"	2½ x 5/32 r = 0.50"	3 x 3/16 r = 0.60"
2’-0”	2150	3960	5600				
2’-6”	1370	2730	4410	5910			
3’-0”	950	1890	3290	4850			
3’-6”	700	1390	2420	3840	6180		
4’-0”	530	1060	1850	2960	5030		
4’-6”	420	840	1460	2340	4000		
5’-0”	340	680	1180	1890	3240		
5’-6”	-	560	980	1560	2670		
6’-0”	-	470	820	1310	2250	5490	
6’-6”	-	-	700	1120	1910	4680	
7’-0”	-	-	600	960	1650	4030	
7’-6”	-	-	520	840	1440	3510	
8’-0”	-	-	-	740	1260	3090	
8’-6”	-	-	-	650	1120	2740	5680
9’-0”	-	-	-	-	1000	2440	5060
9’-6”	-	-	-	-	890	2190	4540
10’-0”	-	-	-	-	810	1970	4100
10’-6”	-	-	-	-	-	1790	3720
11’-0”	-	-	-	-	-	1630	3390
11’-6”	-	-	-	-	-	1490	3100
12’-0”	-	-	-	-	-	1370	2850

TABLE 2.7-3

K, LH, and DLH SERIES JOISTS
MAXIMUM JOIST SPACING FOR DIAGONAL BRIDGING[1]

JOIST DEPTH	BRIDGING ANGLE SIZE – (EQUAL LEG ANGLE)[2]							
	1 x 7/64 (25 x 3 mm) **r = 0.20”** (5.08 mm)	**1-1/4 x 7/64** (32 x 3 mm) **r = 0.25”** (6.35 mm)	**1-1/2 x 7/64** (38 x 3 mm) **r = 0.30”** (7.62 mm)	**1-3/4 x 7/64** (45 x 3 mm) **r = 0.35”** (8.89 mm)	**2 x 1/8** (50 x 3 mm) **r = 0.40”** (10.16 mm)	**2 ½ x 5/32** (64x 4 mm) **r=0.50”** (12.70 mm)	**3 x 3/16** (76 x 5 mm) **r = 0.60”** (15.24 mm)	**3 ½ x 1/4** (89 x 6 mm) **r = 0.70”** (17.78 mm)
in. (mm)	**ft.-in. (mm)**	**ft.-in. (mm)**	**ft.-in. (mm)**	**ft.-in. (mm)**	**ft.-in. (mm)**	**ft.-in. (mm)**	**ft.-in. (mm)**	**ft.-in. (mm)**
12” (305)	6’-7” (2007)	8’-3” (2514)	9’-11”(3022)	11’-7” (3530)	13’-3”(4038)	16’-7”(5055)	19’-11”(6070)	23’-3”(7086)
14” (356)	6’-6” (1981)	8’-3” (2514)	9’-11”(3022)	11’-7” (3530)	13’-3”(4038)	16’-7”(5055)	19’-11”(6070)	23’-3”(7086)
16” (406)	6’-6” (1981)	8’-2” (2489)	9’-10”(2997)	11’-7” (3530)	13’-3”(4038)	16’-7”(5055)	19’-11”(6070)	23’-3”(7086)
18” (457)	6’-6” (1981)	8’-2” (2489)	9’-10”(2997)	11’-6” (3505)	13’-3”(4038)	16’-7”(5055)	19’-11”(6070)	23’-3”(7086)
20” (508)	6’-5” (1955)	8’-2” (2489)	9’-10”(2997)	11’-6” (3505)	13’-2”(4013)	16’-7”(5055)	19’-11”(6070)	23’-3”(7086)
22” (559)	6’-4” (1930)	8’-1” (2463)	9’-10”(2997)	11’-6” (3505)	13’-2”(4013)	16’-6”(5029)	19’-11”(6070)	23’-3”(7086)
24” (610)	6’-4” (1930)	8’-1” (2463)	9’-9” (2971)	11’-5” (3479)	13’-2”(4013)	16’-6”(5029)	19’-10”(6045)	23’-3”(7086)
26” (660)	6’-3” (1905)	8’-0” (2438)	9’-9” (2971)	11’-5” (3479)	13’-1”(3987)	16’-6”(5029)	19’-10”(6045)	23’-2”(7061)
28” (711)	6’-3” (1905)	8’-0” (2438)	9’-8” (2946)	11’-5” (3479)	13’-1”(3987)	16’-6”(5029)	19’-10”(6045)	23’-2”(7061)
30” (762)	6’-2” (1879)	7’-11 (2413)	9’-8” (2946)	11’-4” (3454)	13’-1”(3987)	16’-5”(5004)	19’-10”(6045)	23’-2”(7061)
32” (813)	6’-1” (1854)	7’-10”(2387)	9’-7” (2921)	11’-4” (3454)	13’-0” (3962)	16’-5”(5004)	19’-9”(6020)	23’-2”(7061)
36” (914)	5’-11”(1803)	7’-9” (2362)	9’-6” (2895)	11’-3” (3429)	12’-11”(3973)	16’-4”(4979)	19’-9”(6020)	23’-1”(7035)
40” (1016)	5’-9”(1753)	7’-7” (2311)	9’-5” (2870)	11’-2” (3403)	12’-10”(3911)	16’-4”(4979)	19’-8”(5994)	23’-1”(7035)
44” (1118)	5’-6”(1676)	7’-5” (2260)	9’-3” (2819)	11’-0” (3352)	12’-9” (3886)	16’-3”(4953)	19’-7”(5969)	23’-0”(7010)
48” (1219)	5’-4”(1626)	7’-3” (2209)	9’-2” (2794)	10’-11”(3327)	12’-8” (3860)	16’-2”(4928)	19’-7”(5969)	22’-11”(6985)
52” (1321)	5’-0”(1524)	7’-1”(2159)	9’-0” (2743)	10’-10” (3302)	12’-7” (3835)	16’-1”(4902)	19’-6”(5943)	22’-11”(6985)
56” (1422)	4’-9”(1448)	6’-10”(2083)	8’-10”(2692)	10’-8” (3251)	12’-5” (3784)	16’-0”(4877)	19’-5”(5918)	22’-10”(6960)
60” (1524)	4’-4”(1321)	6’-8”(2032)	8’-7” (2616)	10’-6” (3200)	12’-4” (3759)	15’-10”(4826)	19’-4”(5893)	22’-9”(6935)
64” (1626)	**	6’-4”(1931)	8 -5” (2565)	10’-4” (3149)	12’-2” (3708)	15’-9” (4801)	19’-3”(5867)	22’-8”(6909)
68” (1727)	**	6’-1”(1854)	8’-2” (2489)	10’-2” (3098)	12’-0” (3657)	15’-8” (4775)	19’-2”(5842)	22’-7”(6884)
72” (1829)	**	5’-9”(1753)	8’-0” (2438)	10’-0” (3048)	11’-10”(3606)	15’-6” (4724)	19’-1” (5816)	22’-6” (6858)
80” (2032)	**	5’-0”(1524)	7’-5”(2260)	9’-6” (2895)	11’-6” (3505)	15’-3” (4648)	18’-10”(5740)	22’-4” (6808)
88” (2235)		**	6’-9”(2058)	9’-0” (2743)	11’-1” (3378)	14’-11”(4546)	18’-7” (5664)	22’-1” (6731)
96” (2438)		**	6’-0”(1829)	8’-5” (2565)	10’-8”(3251)	14’-7” (4445)	18’-4” (5588)	21’-11”(6680)
104” (2642)			**	7’-9” (2362)	10’-1”(3073)	14’-2” (4318)	18’-0” (5486)	21’-8” (6604)
112” (2845)			**	7’-0” (2134)	9’-6”(2895)	13’-9” (4191)	17’-8” (5385)	21’-4” (6503)
120” (3048)				**	8’-9”(2667)	13’-4”(4064)	17’-3” (5258)	21’-1” (6426)

**** INTERPOLATION BELOW THE MINIMUM VALUES SHOWN IS NOT ALLOWED.**

1) SEE TABLE 2.7-4 FOR MINIMUM JOIST SPACE FOR DIAGONAL ONLY BRIDGING.
2) In the shaded range of the Table, for LH23, 24,and 25, compressive strength requirements may control, reducing the maximum joist spacing shown. Either select a larger bridging angle size (outside of the shaded area) or check compression strength (Ref. Section 2.7(c)) for LH23, 24, and 25.

TABLE 2.7-4

LH AND DLH SERIES JOISTS HORIZONTAL PLUS DIAGONAL BRIDGING REQUIREMENTS		
JOIST DEPTH	**MINIMUM JOIST SPACE FOR DIAGONAL ONLY BRIDGING** **(0.70 x DEPTH)***	**HORIZONTAL AND DIAGONAL MINIMUM ANGLE SIZE REQUIRED** FOR JOIST SPACING < (0.70 X DEPTH) AND JOIST SPANS > 60'-0" (18.3 m)
in. (mm)	**ft.-in. (mm)**	**in. (mm)**
52" (1321)	3'- 0" (914)	1" x 1" x 7/64" (25 x 3)
56" (1422)	3'- 3" (990)	1" x 1" x 7/64" (25 x 3)
60" (1524)	3'- 6" (1066)	1" x 1" x 7/64" (25 x 3)
64" (1626)	3'- 8" (1117)	1¼" x 1¼" x 7/64" (32 x 3)
68" (1727)	3'-11" (1193)	1¼" x 1¼" x 7/64" (32 x 3)
72" (1829)	4'- 2" (1270)	1¼" x 1¼" x 7/64" (32 x 3)
80" (2032)	4'- 8" (1422)	1¼" x 1¼" x 7/64" (32 x 3)
88" (2235)	5'- 1" (1549)	1 ½" x 1 ½" x 7/64" (38 x 3)
96" (2438)	5'- 7" (1702)	1 ½" x 1 ½" x 7/64" (38 x 3)
104" (2642)	6'- 0" (1829)	1 ¾" x 1 ¾" x 7/64" (44 x 3)
112" (2845)	6'- 6" (1981)	1 ¾" x 1 ¾" x 7/64" (44 x 3)
120" (3048)	7'- 0" (2134)	2" x 2" x1/8" (51 x 3)

*NOTE: WHEN THE JOIST SPACING IS LESS THAN 0.70 x JOIST DEPTH, BOLTED HORIZONTAL BRIDGING SHALL BE USED IN ADDITION TO DIAGONAL BRIDGING.

TABLE 2.7-5

BOLT SIZES WHICH MEET BOLTED BRIDGING CONNECTION REQUIREMENTS		
JOIST SERIES	**SECTION NUMBER***	**BOLT DIAMETER**
K	ALL	3/8" (10 mm) A307
LH/DLH	2 – 12	3/8" (10 mm) A307
LH/DLH	13 – 17	1/2" (13 mm) A307
LH/DLH	18 – 20	5/8" (16 mm) A307
LH/DLH	21 – 22	5/8" (16 mm) A325
LH/DLH	23 – 25	3/4" (19 mm) A325

*REFER TO LAST DIGIT(S) OF JOIST DESIGNATION

NOTE: WASHERS SHALL BE USED WITH SLOTTED OR OVERSIZED HOLES. BOLTS SHALL BE TIGHTENED TO A MINIMUM SNUG TIGHT CONDITION.

2.8 HEADERS

Where the end reaction of a steel joist is supported by a header, as outlined and defined in Section 5.2(a), and is not more than 10,000 pounds (44482 N), the header shall be furnished by the Seller. Such headers shall be any type standard with the joist manufacturer. Conditions involving headers shall be investigated during erection and, if necessary, provisions made to provide a safe condition. Headers are not provided for steel joists with end reactions greater than 10,000 pounds (44482 N).

2.9 BOTTOM CHORD LATERAL BRACING FOR JOIST GIRDERS

Bottom chord lateral bracing shall be furnished as required to prevent lateral movement of the bottom chord of the Joist Girder and to prevent the ratio of chord length to chord radius of gyration from exceeding that specified in the Steel Joist Institute Standard Specifications of latest adoption. The lateral bracing shall be that which is standard with the joist manufacturer, and shall be sufficient to properly brace the bottom chord of the Joist Girder.

2.10 CONNECTIONS

The adequacy of the end anchorage connection (bolted or welded) between the joist or Joist Girder bearing seat and the supporting structure is the responsibility of the *specifying professional*. The contract documents shall clearly illustrate the end anchorage connection. Forces to be considered include end moments, axial loads, and diaphragm boundaries. Particular attention is required where there is net uplift.

Welded End Anchorage for Uplift
The strength of the joist bearing seat for an uplift loading combination is a function of both the joist seat thickness and length of the end anchorage welds. The minimum end anchorage welds as shown in the Steel Joist Institute Standard Specifications Table 5.7-1 may not develop the full capacity of the joist seat assembly for the specified uplift resistance. When the support dimensions allow, it is recommended the *specifying professional* use a small fillet weld thickness in conjunction with a longer weld length for the connection design to facilitate the design of the joist bearing seat. The joist manufacturer will provide a seat of sufficient thickness and strength to resist the uplift end reaction resulting from the specified uplift. For additional information, including tables for welded end anchorage uplift capacities, refer to Steel Joist Institute Technical Digest 6, “Structural Design of Steel Joist Roofs to Resist Uplift Loads”

Bolted End Anchorage for Uplift
Typically, joists and Joist Girders with bolted end anchorage also require a final connection by welding in order to provide lateral stability to the supporting member. However, only the bolts are relied on to provide uplift anchorage. The bolt type and diameter designed by the *specifying professional* shall provide sufficient tensile strength to resist the uplift end reaction resulting from the specified uplift. Bolts of higher strength than the minimum required by the Steel Joist Institute Standard Specifications may be required.

When the bearing seats are detailed for a bolted connection, bolts shall be installed. If the bolts are not installed, an equivalent welded connection may be permitted by the *specifying professional*, provided the weld is deposited in the slot on the side farthest from the edge of the seat. Additional weld required to meet that specified for the welded connection shall be placed at a location on the seat away from the outer edge of the slot as shown in Figure 2.10-1.
For additional information, including tables for bolted end anchorage uplift capacities, refer to Steel Joist Institute Technical Digest 6, “Structural Design of Steel Joist Roofs to Resist Uplift Loads”

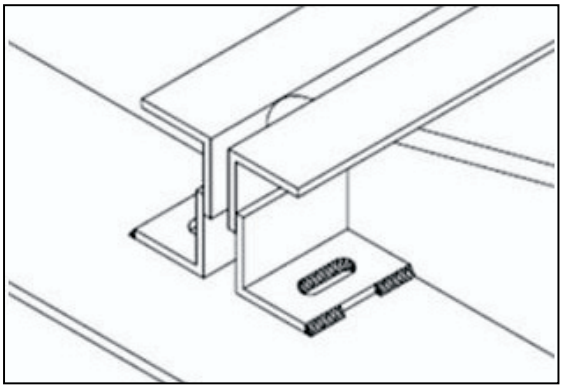

Figure 2.10-1

SECTION 3.
MATERIALS

3.1 STEEL

The steel used in the manufacture of joists and Joist Girders shall comply with the Steel Joist Institute Standard Specifications of latest adoption.

3.2 PAINT

(a) Standard Shop Paint - The shop coat of paint, when specified, shall comply with the Steel Joist Institute Standard Specifications of latest adoption.

(b) Disclaimer - The typical shop applied paint that is used to coat steel joists and Joist Girders is a dip applied, air dried paint. The paint is intended to be an impermanent and provisional coating which shall protect the steel for only a short period of exposure in ordinary atmospheric conditions.

Since most joists and Joist Girders are painted using a standard dip coating, the coating shall be permitted to not be uniform and shall be permitted to include drips, runs, and sags. Compatibility of any coating including fire protective coatings applied over the standard shop paint shall be the responsibility of the specifier and/or painting contractor.

The shop applied paint may require field touch-up/repair as a result of, but not limited to, the following:

1. Abrasions from: Bundling, banding, loading and unloading, chains, dunnage during shipping, cables and chains during erection, bridging, installation, and other handling at the jobsite.
   NOTE: Rusting should be expected at any abrasion.
2. Dirt.
3. Diesel smoke.
4. Road salt.
5. Weather conditions during storage.

The joist manufacturer shall not be responsible for the condition of the paint if it is not properly protected after delivery.

SECTION 4.
INSPECTION

Inspections shall be made in accordance with Section 5.14 of the Steel Joist Institute Standard Specifications of latest adoption.

SECTION 5.
ESTIMATING

5.1 PLANS FOR BIDDING

Plans to serve as the basis for bids shall show the character of the work with sufficient clarity to permit making an accurate estimate and shall show the following:

- Designation and location of Materials [see Section 5.2(a)], including any special design or configuration requirements
- Locations and elevations of all steel and concrete supporting members and bearing walls
- Location and length of joist extended ends
- Location and size of all openings in floors and roofs
- Location of all partitions
- Loads and their locations as defined in Section 6.1
- Construction and thickness of floor slabs, roof deck, ceilings and partitions
- Joists or Joist Girders requiring extended bottom chords
- Paint, if other than manufacturer's standard

5.2 SCOPE OF ESTIMATE

(a) Unless otherwise specified, the following items shall be included in the estimate, and requirements shall be determined as outlined in Section 6.1:

- Steel Joists
- Joist Girders
- Joist Substitutes
- Joist Extended Ends
- Ceiling Extensions
- Extended bottom chord used as strut
- Bridging
- Joist Girder bottom chord bracing
- Headers which are defined as members supported by and carrying Open Web Steel Joists with end reactions of no more than 10,000 lbs. (44482 N)
- One shop coat of paint, when specified, shall be in accordance with Section 3.2

(b) The following items shall not be included in the estimate but shall be permitted to be quoted and identified by the joist manufacturer as separate items:

- Headers carrying Open Web Steel Joists with end reactions greater than 10,000 lbs. (44482 N)
- Headers for Deep Longspan Steel Joists, **DLH**-Series

- Reinforcement in slabs over joists
- Centering material, decking, and attachments
- Miscellaneous framing between joists for openings at ducts, dumbwaiters, ventilators, skylights, etc.
- Loose individual or continuous bearing plates and bolts or anchors for such plates
- Erection bolts for joist and Joist Girder end anchorage
- Horizontal bracing in the plane of the top and bottom chords from joist to joist or joist to structural framing and walls
- Bridging anchors and anchorage
- Wood nailers
- Moment plates
- Special joist configuration or bridging layouts for ductwork or sprinkler systems
- Shear studs

SECTION 6.
PLANS AND SPECIFICATIONS

6.1 PLANS FURNISHED BY BUYER

The Buyer shall furnish the Seller plans and specifications as prepared by the *specifying professional* showing all Material requirements and steel joist and/or steel Joist Girder designations, the layout of walls, columns, beams, girders and other supports, as well as floor and roof openings and partitions correctly dimensioned. The elevation of finished floors, roofs, and bearings shall be shown.

(a) Loads

The *specifying professional* shall clearly provide all design loads as described in Section 2.4 This includes the live loads to be used, the wind uplift if any, the weights of partitions and the location and amount of any special loads, such as monorails, fans, blowers, tanks, etc.

(b) Connections

Minimum end anchorage for simple span gravity loading shall be in accordance with Steel Joist Institute Standard Specifications of latest adoption, Section 5.7. The end anchorage of a steel joist or Joist Girder is the connection of the joist or Joist Girder bearing seat to the support of the joist or Joist Girder.

The adequacy of the end anchorage connection (bolted or welded) between the joist or Joist Girder bearing seat and the supporting structure is the responsibility of the *specifying professional*. The contract documents shall clearly illustrate the end anchorage connection.

The joist manufacturer is responsible for the design of the bearing seats of joists or Joist Girders for the loads designated by the *specifying professional* in the contract documents.

The *specifying professional* is responsible for bridging termination connections. The contract documents shall clearly illustrate these termination connections.

(c) Special Considerations

The *specifying professional* shall indicate on the construction documents special considerations including:

1) Profiles for non-standard joist and Joist Girder configurations (Standard joist and Joist Girder configurations are as indicated in the Steel Joist Institute Standard Specifications of latest adoption).
2) Oversized or other non-standard web openings
3) Extended Ends

4) Deflection criteria for live and total loads for non-SJI standard joists
5) Non-SJI standard bridging

6.2 PLANS FURNISHED BY SELLER

The Seller shall furnish the buyer with steel joist placement plans to show the material as specified on the construction documents and are to be utilized for field installation in accordance with specific project requirements as stated in Section 6.1. Steel placement plans shall include, at a minimum, the following:

a) Listing of all applicable loads as stated in Section 6.1 and used in the design of the steel joists and Joist Girders as specified in the construction documents.

b) Profiles for non-standard joist and Joist Girder configurations (standard joist and Joist Girder configurations are as indicated in the Steel Joist Institute Standard Specifications of latest adoption).

c) Connection requirements for:

   1) Joist supports
   2) Joist Girder supports
   3) Field splices
   4) Bridging attachments

d) Deflection criteria for live load and total loads for non-SJI standard joists.

e) Size, location, and connections for all bridging

f) Joist headers

All Material shall be identified with its mark which also appears on the Bill of Materials. The shop paint shall be as noted on the joist placement plans. **Steel joist placement plans do not require the seal and signature of the joist manufacturer's registered design professional**.

6.3 DISCREPANCIES

The *specifying professional's* bid plans and specifications shall be assumed to be correct in the absence of written notice from the Buyer to the contrary. When plans are furnished by the Buyer that do not agree with the Architect's bid plans, such detailed plans shall be considered as a written notice of change of plans. However, it shall be the Buyer's responsibility to advise the Seller of those changes which affect the joists or Joist Girders.

6.4 APPROVAL

When joist placement plans are furnished by the Seller, they are submitted to the Buyer and owner for examination and approval. The Seller allows a maximum of fourteen (14) calendar days in their schedule for the return of placement plans noted with the owner's and customer's approval, or approval subject to corrections as noted. The Seller makes the corrections, furnishes corrected prints for field use to the owner/customer and is released by the owner/customer to start joist manufacture.

Approval by the owner/customer of the placement plans, sections, notes and joist schedule prepared by the Seller indicates that the Seller has correctly interpreted the contract requirements, and is released by the owner/customer to start joist manufacture. This approval constitutes the owner's/customer's acceptance of all responsibility for the design adequacy of any detail configuration of joist support conditions shown by the Seller as part of the preparation of these placement plans.

Approval does not relieve the Seller of the responsibility for accuracy of detail dimensions on the plans, nor the general fit-up of joists to be placed in the field.

6.5 CHANGES

When any changes in plans are made by the Buyer (or the buyer's representative) either prior to or after approval of detailed plans, or when any Material is required and was not shown on the plans used as the basis of the bid, the cost of such changes and/or extra Material shall be paid by the Buyer at a price to be agreed upon between Buyer and Seller.

6.6 CALCULATIONS

The Seller shall design the steel joists and/or steel Joist Girders in accordance with the current Steel Joist Institute Standard Specifications of latest adoption to support the load requirements of Section 6.1. The *specifying professional* may require submission of the steel joist and Joist Girder calculations as prepared by a registered design professional responsible for the product design. If requested by the *specifying professional*, the steel joist manufacturer shall submit design calculations with a cover letter bearing the seal and signature of the joist manufacturer's registered design professional. In addition to standard calculations under this seal and signature, submittal of the following shall be included:

a) Non-SJI standard bridging details (e.g. for cantilevered conditions, net uplift, etc.)

b) Connection details for:

   1) Non-SJI standard connections (e.g. flush framed or framed connections)
   2) Field splices
   3) Joist headers

SECTION 7.
HANDLING AND ERECTION

The Buyer and Erector shall comply with the requirements of the Steel Joist Institute Standard Specifications of latest adoption in the handling and erection of Material. For additional coverage of this topic, refer to the Steel Joist Institute's Technical Digest 9, "Handling and Erection of Steel Joists and Joist Girders".

The Buyer and/or Erector shall check all materials on arrival at job site and promptly report to Seller any discrepancies and/or damages.

When joists cannot be delivered as a single piece, they shall be permitted to be delivered in several pieces therefore requiring the pieces to be spliced together in the field. The manufacturer's instructions SHALL be followed to ensure matching pieces are joined, proper bolts are used, and any required bolt tensioning is incorporated.

All joists shall be handled by methods which avoid damage to any part of the joist. For long **LH**-Series joists, **DLH**-Series joists, or Joist Girders this may require the use of spreader bars, multiple hoisting cables, or multiple cranes as necessary to safely handle the joist. Hoisting cables shall be attached at panel points and shall be at panel point locations selected to minimize erection stresses.

The current OSHA, 29 CFR Part 1926, Safety Standards for Steel Erection; Subpart R- Steel Erection, refers to certain joists at or near columns to be designed with sufficient strength to allow one employee to release the hoisting cable without the need for erection bridging. **This STANDARD shall not be interpreted that any joist at or near a column line is safe to support an employee without bridging installed.** Many limitations exist that prevent these joists from being designed to safely allow an employee on an un-bridged joist. Because of these limitations these joists shall be erected by incorporating erection methods ensuring joist stability and either:

1) Installing bridging or otherwise stabilizing the joist prior to releasing the hoisting cable, or
2) Releasing the hoisting cable without having a worker on the joist.

A steel joist or Joist Girder shall not be placed on any support structure unless such structure is stabilized. When steel joists or Joist Girders are landed on a structure, they shall be secured to prevent unintentional displacement prior to installation.

A bridging terminus point shall be established before joist bridging is installed.

Steel joist and Joist Girders shall not be used as anchorage points for a fall arrest system unless written directions to do so is obtained from a “qualified person”. (For definition of “qualified person” see Code of Federal Regulations (CFR), Occupational Safety and Health Administration (OSHA), 29 CFR Part 1926, Safety Standards for Steel Erection; Subpart R- Steel Erection, §1926.751 Definitions, January 18, 2001, Washington, D.C.)

No modification that affects the strength of a steel joist or Joist Girder shall be made without the written approval of the project engineer of record.

The Seller shall not be responsible for the condition of paint finish on Material if it is not properly protected after delivery.

The Seller shall not be responsible for improper fit of Material due to inaccurate construction work.

SECTION 8.
BUSINESS RELATIONS

8.1 PRESENTATION OF PROPOSALS

All proposals for furnishing Material shall be made on a sales contract form. After acceptance by the Buyer, these proposals shall be approved or executed by a qualified official of the Seller. Upon such approval the proposal becomes a contract.

8.2 ACCEPTANCE OF PROPOSALS

All proposals are intended for prompt acceptance and are subject to change without notice.

8.3 BILLING

Contracts on a lump sum basis are to be billed proportionately as shipments are made.

8.4 PAYMENT

Payments shall be made in full on each invoice without retention.

8.5 ARBITRATION

All business controversies which cannot be settled by direct negotiations between Buyer and Seller shall be submitted to arbitration. Both parties shall sign a submission to arbitration and if possible agree upon an arbitrator. If they are unable to agree, each shall appoint an arbitrator and these two shall appoint a third arbitrator. The expenses of the arbitration shall be divided equally between the parties, unless otherwise provided for in the agreements to submit to arbitration. The arbitrators shall pass final judgment upon all questions, both of law and fact, and their findings shall be conclusive.

GLOSSARY

Accessories. Structural components related to the design, fabrication and erection of *joists* and *Joist Girders* including, but not limited to sloped *end bearings*, *extended ends*, *ceiling extensions*, *bridging* and bridging anchors, *headers* and bottom chord lateral bracing for *Joist Girders*.

ASD (Allowable Strength Design). Method of proportioning structural components such that the *allowable strength* equals or exceeds the *required strength* of the component under the action of the *ASD load combinations*.

ASD Load Combination. *Load* combination in the *applicable building code* intended for allowable *strength design* (allowable stress design).

Allowable Strength*. *Nominal strength* divided by the *safety factor*, R_{Ω}.

Applicable Building Code. Building code under which the structure is designed.

Available Strength*. *Design strength* or *allowable strength* as appropriate.

Bay. The distance between the main structural frames or walls of a building.

Bearing. The distance that the bearing shoe or seat of a *joist* or *Joist Girder* extends over its masonry, concrete or steel support.

Bearing Plate. The steel plate used for a *joist* or *Joist Girder* to bear on when it is supported by masonry or concrete supports. The plate is designed by the *Specifying Professional* to carry the *joist* reaction to the supporting structure.

Bottom Chord Extension (BCX). The two angle extended part of a *joist* bottom chord from the first bottom chord panel point towards the end of the joist.

Bridging. In general, a member connected to a joist to brace it from lateral movement. See also Diagonal Bridging and Horizontal Bridging

Buckling. *Limit state* of sudden change in the geometry of a structure or any of its elements under a critical loading condition.

Buckling Strength. *Nominal strength* for *buckling* or instability *limit states*.

Buyer. The entity that has agreed to purchase *material* from the manufacturer and has also agreed to the terms of sale.

Camber. An upward curvature of the chords of a *joist* or *Joist Girder* induced during shop fabrication. Note, this is in addition to the pitch of the top chord.

Ceiling Extension. A *bottom chord extension* except that only one angle of the *joist* bottom chord is extended from the first bottom chord panel point towards the end of the joist.

Chords. The top and bottom members of a *joist* or *Joist Girder*. When a chord is comprised of two angles there is usually a gap between the members.

Clear Span. The actual clear distance or opening between supports for a *joist*, that is the distance between walls or the distance between the edges of flanges of beams.

Cold-Formed Steel Structural Member. Shape manufactured by press-braking blanks sheared from sheets, cut lengths of coils or plates, or by roll forming cold- or hot-rolled coils or sheets; both forming operations being performed at ambient room temperature, that is, without manifest addition of heat such as would be required for hot forming.

Collateral Load. All additional dead loads other than the weight of the building, such as sprinklers, pipes, ceilings, and mechanical or electrical components.

Connection. Combination of structural elements and *joints* used to transmit forces between two or more members. See also Splice.

Deck. A floor or roof covering made out of gage metal attached by welding or mechanical means to *joists*, beams, *purlins*, or other structural members and can be galvanized, painted, or unpainted.

Design Load. Applied *load* determined in accordance with either *LRFD load combinations* or *ASD load combinations*, whichever is applicable.

Design Strength*. *Resistance factor* multiplied by the *nominal strength*, R_{ϕ}.

Diagonal Bridging. Two angles or other structural shapes connected from the top chord of one *joist* to the bottom chord of the next joist to form an 'X' shape. These members are almost always connected at their point of intersection.

Diaphragm. Roof, floor or other membrane or bracing system that transfers in-plane forces to the lateral force resisting system.

Effective Length. Length of an otherwise identical column with the same strength when analyzed with pin-ended boundary conditions.

Elastic Analysis. *Structural analysis* based on the assumption that the structure returns to its original geometry on removal of the *load*.

End Diagonal or Web. The first web member on either end of a *joist* or *Joist Girder* which begins at the top chord at the seat and ends at the first bottom chord panel point.

Erector. The entity that is responsible for the safe and proper erection of the *materials* in accordance with all applicable codes and regulations.

Extended End. The extended part of a *joist* top chord with the seat angles also being extended from the end of the joist extension back into the joist and maintaining the standard end *bearing* depth over the entire length of the extension.

Factored Load. Product of a *load factor* and the *nominal load*.

Filler. A rod, plate or angle welded between a two angle web member or between a top or bottom chord panel to tie them together, usually located at the middle of the member.

Flexural Buckling. Buckling mode in which a compression member deflects laterally without twist or change in cross-sectional shape.

Flexural-Torsional Buckling. Buckling mode in which a compression member bends and twists simultaneously without change in cross-sectional shape.

Girt. Horizontal structural member that supports wall panels and is primarily subjected to bending under horizontal loads, such as wind load.

Gravity Load. *Load*, such as that produced by dead and live loads, acting in the downward direction.

Header. A structural member located between two *joists* or between a joist and a wall which carries another joist or joists. It is usually made up of an angle, channel, or beam with saddle angle connections on each end for bearing.

Horizontal Bridging*. A continuous angle or other structural shape connected to the top and bottom chord of a joist.

Inelastic Analysis. *Structural analysis* that takes into account inelastic material behavior, including plastic analysis.

Instability. *Limit state* reached in the loading of a *structural component*, frame or structure in which a slight disturbance in the *loads* or geometry produces large displacements.

Joint. Area where two or more ends, surfaces or edges are attached. Categorized by type of fastener or weld used and the method of force transfer.

Joist. A structural load-carrying member with an open web system which supports floors and roofs utilizing hot-rolled or cold-formed steel and is designed as a simple span member. Currently, the SJI has the following joist designations: K-Series including KCS, LH-Series and DLH-Series, and CJ-Series.

Joist Girder. A primary structural load-carrying member with an open web system designed as a simple span supporting equally spaced concentrated loads of a floor or roof system acting at the panel points of the member and utilizing hot-rolled or cold-formed steel.

Joist Substitute. A structural member who's intended use is for very short spans (10 feet or less) where open web steel joists are impractical. They are usually used for short spans in skewed bays, over corridors or for outriggers. It can be made up of two or four angles to form channel sections or box sections.

Lateral Buckling. Buckling mode of a flexural member involving deflection normal to the plane of bending.

Lateral-Torsional Buckling. Buckling mode of a flexural member involving deflection normal to the plane of bending occurring simultaneously with twist about the shear center of the cross section.

Limit State. Condition in which a structure or component becomes unfit for service and is judged either to be no longer useful for its intended function (*serviceability limit state*) or to have reached its ultimate load-carrying capacity (*strength limit state*).

Load. Force or other action that results from the weight of building materials, occupants and their possessions, environmental effects, differential movement, or restrained dimensional changes.

Load Effect. Forces, stresses, and deformations produced in a *structural component* by the applied *loads*.

Load Factor. Factor that accounts for deviations of the *nominal load* from the actual *load*, for uncertainties in the analysis that transforms the *load* into a *load effect*, and for the probability that more than one extreme *load* will occur simultaneously.

Local Buckling.** *Limit state* of *buckling* of a compression element within a cross section.

LRFD (Load and Resistance Factor Design). Method of proportioning *structural components* such that the *design strength* equals or exceeds the *required strength* of the component under the action of the *LRFD load combinations*.

LRFD Load Combination. *Load* combination in the *applicable building code* intended for strength design (*Load and Resistance Factor Design*).

Material. *Joists*, *Joist Girders* and *accessories* as provided by the *Seller*.

Nailers. Strips of lumber attached to the top chord of a *joist* so plywood or other flooring can be nailed directly to the *joist*.

Nominal Load. Magnitude of the *load* specified by the *applicable building code*.

Nominal Strength*. Strength of a structure or component (without the *resistance factor* or *safety factor* applied) to resist the *load effects*, as determined in accordance with these *Standard Specifications*.

Owner. The entity that is identified as such in the Contract Documents.

Permanent Load. *Load* in which variations over time are rare or of small magnitude. All other *loads* are *variable loads*.

Placement Plans. Drawings that are prepared depicting the interpretation of the Contract Documents requirements for the *material* to be supplied by the *Seller*. These floor and/or roof plans are approved by the *Specifying Professional*, *Buyer* or *Owner* for conformance with the design requirements. The *Seller* uses the information contained on these drawings for final material design. A unique piece mark number is typically shown for the individual placement of *joists*, *Joist Girders* and *accessories* along with sections that describe the *end bearing* conditions and minimum attachment required so that *material* is placed in the proper location in the field.

Ponding. Retention of water at low or irregular areas on a roof due solely to the deflection of flat roof framing.

Purlin. Horizontal structural member that supports roof deck and is primarily subjected to bending under vertical loads such as dead, snow or wind loads.

Quality Assurance. System of shop and field activities and controls implemented by the *owner* or his/her designated representative to provide confidence to the *owner* and the building authority that quality requirements are implemented.

Quality Control. System of shop and field controls implemented by the *seller* and *erector* to ensure that contract and company fabrication and erection requirements are met.

Required Strength*. Forces, stress, and deformations produced in a *structural component*, determined by either *structural analysis*, for the *LRFD* or *ASD load combinations*, as appropriate, or as specified by these *Standard Specifications*.

Resistance Factor, ϕ**.** Factor that accounts for unavoidable deviations of the *nominal strength* from the actual strength and for the manner and consequences of failure.

Safety Factor, Ω**.** Factor that accounts for deviations of the actual strength from the *nominal strength*, deviations of the actual *load* from the *nominal load*, uncertainties in the analysis that transforms the *load* into a *load effect* and for the manner and consequences of failure.

Seller. A company certified by the Joist Institute engaged in the manufacture and distribution of *joists*, *Joist Girders* and *accessories*.

Service Load. *Load* under which serviceability limit states are evaluated.

Serviceability Limit State. Limiting condition affecting the ability of a structure to preserve its appearance, maintainability, durability, or the comfort of its occupants or function of machinery, under normal usage.

Slenderness Ratio. The ratio of the effective length of a column to the radius of gyration of the column about the same axis of bending.

Span. The centerline-to-centerline distance between structural steel supports such as a beam, column or *Joist Girder* or the *clear span* distance plus four inches onto a masonry or concrete wall.

Specified Minimum Yield Stress. Lower limit of *yield stress* specified for a material as defined by ASTM.

Specifying Professional. The licensed professional who is responsible for sealing the building Contract Documents, which indicates that he or she has performed or supervised the analysis, design and document preparation for the structure and has knowledge of the load-carrying structural system.

Splice. *Connection* between two structural members joined at their ends by either bolting or welding to form a single, longer member.

Stability. Condition reached in the loading of a *structural component*, frame or structure in which a slight disturbance in the *loads* or geometry does not produce large displacements.

Stabilizer Plate. A steel plate at a column or wall inserted between the end of a bottom *chord* of a *joist* or *Joist Girder*.

Standard Specifications. Documents developed and maintained by the Steel Joist Institute for the design and manufacture of open web steel joists and Joist Girders. The term "SJI Standard Specifications" encompass by reference the following:

ANSI SJI 100 - 2020 Standard Specification for K-Series, LH-Series and DLH-Series Open Web Steel Joists and for Joist Girders
ANSI SJI 200 - 2020 Standard Specifications for Composite Steel Joists.

Strength Limit State. Limiting condition affecting the safety of the structure, in which the ultimate load-carrying capacity is reached.

Structural Analysis. Determination of *load effects* on members and connections based on principles of structural mechanics.

Structural Drawings. The graphic or pictorial portions of the Contract Documents showing the design, location and dimensions of the work. These documents generally include plans, elevations, sections, details, connections, all loads, schedules, diagrams and notes.

Tagged End. The end of a *joist* or *Joist Girder* where an identification or piece mark is shown by a metal tag. The member must be erected with this tagged end in the same position as the tagged end noted on the *placement plan*.

Tensile Strength (of material). Maximum tensile stress that a material is capable of sustaining as defined by ASTM.

Tie Joist. A *joist* that is bolted at a column.

Top Chord Extension (TCX). The extended part of a *joist* top chord. This type of extension only has the two top chord angles extended past the joist seat.

Torsional Buckling. *Buckling* mode in which a compression member twists about its shear center axis.

Unbraced Length. Distance between braced points of a member, measured between the centers of gravity of the bracing members.

Variable Load. *Load* not classified as *permanent load*.

Webs. The vertical or diagonal members joined at the top and bottom *chords* of a *joist* or *Joist Girder* to form triangular patterns.

Yield Point. First stress in a material at which an increase in strain occurs without an increase in stress as defined by ASTM.

Yield Strength. Stress at which a material exhibits a specified limiting deviation from the proportionality of stress to strain as defined by ASTM.

Yield Stress. Generic term to denote either *yield point* or *yield strength*, as appropriate for the material.

NOTES:

* These terms are usually qualified by the type of *load effect*, e.g., nominal tensile strength, available compressive strength, design flexural strength.

** Term usually qualified by the type of component, e.g. local web buckling, local flange buckling, etc.

APPENDIX A

FIRE-RESISTANCE RATINGS WITH STEEL JOISTS

The Underwriters Laboratories (U.L.) Fire Resistance Directory lists hundreds of assemblies and their fire resistance ratings. The Specifying Professional can choose between numerous Floor-Ceiling and Roof-Ceiling assemblies that include steel joists and Joist Girders.

As a convenience, a selected number of assemblies are listed on the following pages. In addition, the Steel Joist Institute's Technical Digest #10 "Design of Fire Resistive Assemblies with Steel Joists" has a complete listing of steel joist assemblies and additional information about fire ratings. However, the listing that follows and the Technical Digest are intended as a guide only, and the Specifying Professional must refer to the current U.L. Fire Resistance Directory for complete design requirements.

Hundreds of fire tests on steel joist-supported assemblies have been conducted at nationally recognized testing laboratories in accordance with ASTM Standard E119, ANSI A2.1/UL 263, and NFPA 251. Because of practical loading restrictions and limitations of furnace dimensions, the vast majority of these tests were run using lightweight joists – normally from 8 inches to 14 inches (203 mm to 356 mm) deep. This practice was advantageous in that it established the *minimum* acceptable joists at the shallow and lightweight end of the joist load tables. This also resulted in a specified minimum joist designation being listed in the U.L. Fire Resistance Assembly, which is the joist that combines the required minimum depth and minimum weight per foot. Joists of the same series which equal or exceed the specified minimum joist depth and joist weight per foot may be used provided the accessories are compatible. The dimension from the bottom chord of the joists to the ceiling, whether given or calculated, is a minimum.

Where a U.L. Fire Resistance Assembly is being utilized, the Specifying Professional shall indicate the assembly number being used on the structural contract drawings. In addition, the Specifying Professional shall consider the following, as applicable:

- Joist designations specified on the structural contract drawings shall not be less than the minimum size for that assembly. The assembly may also require a minimum bridging size that may be larger than required by the SJI Specifications for the particular designation and joist spacing.
- Some assemblies stipulate minimum size materials or minimum cross sectional areas for individual joist and Joist Girder components. It is the responsibility of the Specifying Professional to show all special requirements on the contract drawings.
- Note that the maximum joist spacing shown for Floor-Ceiling Assemblies may be increased from the spacing listed in the U.L. Fire Resistance Directory to a maximum of 48 inches on center, provided the floor slab meets the structural requirements and the spacing of hanger wires supporting the ceiling is not increased.
- Some assemblies stipulate an allowable maximum joist design stress level less than the 30 ksi (207 MPa) used in the joist and Joist Girder specifications. It is the responsibility of the Specifying Professional to apply the proper stress level reductions (when applicable) when selecting joists and/or Joist Girders. This is accomplished by prorating the joist and/or Joist Girder capacities. To adjust the stress level of joists or Joist Girders, multiply the design load by the ratio of the joist design stress to the required maximum [e.g. 30/26 (207/179), 30/24 (207/165), 30/22 (207/152)], and then using this increased load, select a joist or Joist Girder from the load and/or weight tables.

- Some U.L. Roof-Ceiling Assemblies using direct applied protection limit the spacing of the joists for certain types and gages of metal decking – refer to the U.L. Fire Resistance Directory for this information.
- Where fire protective materials are to be applied directly to the steel joists or Joist Girders, it is often desired to have the joist furnished as unpainted. The Specifying Professional should indicate on the structural contract drawings if the joists or Joist Girders are to be painted or not.
- Certain older U.L. fire rated assemblies may refer to joist series that predate the K-series joists. Where one of these assemblies is selected, refer to the U.L Fire Resistance Directory for special provisions for substituting a K-Series joist in lieu of an S-, J-, and/or H-Series joist.

APPENDIX A

FLOOR - CEILING ASSEMBLIES WITH MEMBRANE PROTECTION

Restrained Assembly Rating	Protection Material	Minimum Joist Size	Concrete		Maximum Joist Spacing (in.)	Minimum Primary Support Member	UL Design Number
			Minimum Thickness (in.)	Type			
1 Hr.	Acoustical	12K1, 18LH02	2.5	LW, NW	NL	20G@13plf W8 x 15	D216
							D219
	Exposed Grid	10K1	2.5	NW	48*	20G@14plf W6 x 12	G205
		10K1	2.0		72	W6 x 12	G208
		10K1	2.5		48*	20G@14plf W6 x 12	G256
	Gypsum Board	10K1	2.5	NW	48	W8 x 24	G548
1 1/2 Hr.	Acoustical	12K1, 18LH02	2.5	LW, NW	NL	20G@13plf W8 x 15	D216
							D219
	Gypsum Board			NW		20G@20plf W8 x 28	D502
	Exposed Grid	10K1	2.5	NW	24 (48)	20G@13plf W6 x 12	G203
		10K1	2.5		48*	20G@14plf W6 x 12	G205
		10K1	2.0		72	W6 x 12	G208
		10K1	2.5		24 (48)		G213
		10K1	2.5		24 (48)	20G@13plf W8 x 31	G228
		10K1	2.0		24 (48)	20G@13plf W8 x 24	G229
		10K1	2.5		24 (48)	20G@13plf W6 x 12	G243
		10K1	2.5		24 (48)	20G@13plf W8 x 31	G268
	Gypsum Board	12K1	2.0	NW	24 (48)	NS	G502
2 Hr.	Acoustical	12K1, 18LH02	2.5	LW, NW	NL	20G@13plf W8 x 15	D216
							D219
	Gypsum Board			NW		20G@20plf W8 x 28	D502
	Concealed Grid	10K1	2.25	NW	24 (48)	W6 x 25	G023
		8K1	2.5		24 (48)	20G@13plf W8 x 20	G031
		10K1			30 (48)	20G@13plf W10 x 21	G036
	Exposed Grid	10K1	2.5	NW	24 (48)	20G@13plf W6 x 12	G203
		10K1	2.5		48*	20G@14plf W6 x 12	G205
		10K1	2.5		72	W6 x 12	G208

APPENDIX A

FLOOR - CEILING ASSEMBLIES WITH MEMBRANE PROTECTION

		10K1	2.5		24 (48)		G213
		10K1	2.5		24 (48)	W8 x 31	G227
		10K1	2.5		24 (48)	20G@13plf W8 x 31	G228
		10K1	2.5		24 (48)	20G@13plf W8 x 24	G229
		10K1	2.5		24 (48)	20G@13plf W6 x 12	G243
		10K1	2.5		48*	20G@14plf W6 x 12	G256
		10K1	2.5		24 (48)	20G@13plf W8 x 31	G268
	Gypsum Board	10K1	2.0	NW	24 (48)	NS	G505
		10K1	2.5		24 (48)	20G14plf W8 x 31	G514
		10K1	2.5		24 (48)	20G@13plf W10 x 21	G523
		10K1	2.5		24 (48)	20G@13plf W8 x 24	G529
		10K1	2.5		24 (48)	20G@13plf W10 x 21	G547
3 Hr.	Acoustical	12K1, 18LH02	3.25	LW, NW	NL	20G@13plf W8 x 15	D216
							D219
	Concealed Grid	10K1	3.5	NW	24 (48)	20G@13plf W8 x 20	G033
		10K1	3.25		30 (48)	20G@13plf W10 x 21	G036
	Exposed Grid	10K1	3.5	NW	48*	20G@14plf W6 x 12	G205
		10K1	3.5		24 (48)	W6 x 12	G213
		10K1	3.25		24 (48)	20G@13plf W8 x 24	G229
		10K1	3.5		48*	W6 x 12	G256
		10K1 (22 ksi max.)	2.63		24 (48)	20G@13plf W8 x 31	G268
	Gypsum Board	10K1	3.0	NW	24 (48)	20G@13plf W10 x 21	G523
		10K1	2.75		24 (48)	20G@13plf W8 x 24	G529
		10K1	3.0		24 (48)	20G@13plf W10 x 21	G547

APPENDIX A

FLOOR - CEILING ASSEMBLIES WITH SPRAY APPLIED FIRE RESISTIVE MATERIALS

Restrained Assembly Rating	Protection Material	Minimum Joist Size	Concrete		Maximum Joist Spacing	Minimum Primary Support Member	UL Design Number
			Minimum Thickness (in.)	Type			
1 Hr.	SAFRM	NS	2.5	LW, NW	NL	W8 x 28	D759
		10K1	2.5				D779
		10K1	2.5				D780
		NS	3.25	LW			D782
		10K1*	2.5	LW			D925
			3.5	NW			
		16K6*	NS	LW, NW	42	20G@20plf W8 x 28	G701
		16K6	3.0	LW	50.5	NS	G702
			3.75	NW			
		16K6*	2.5	LW, NW	42	NS	G705
		16K6	3.0	LW	50.5	NS	G706
			3.75	NW			
		16K6*	2.5	LW, NW	42	20G@20plf W8 x 28	G708
		NS	2.5		42	W8 x 28	G709
		16K6*	2.5		42	20g@20plf W8 x 24	G801
		12K1	3.0	LW	50.5	NS	G802
			3.75	NW			
1 1/2 Hr.	SAFRM	NS	2.5	LW, NW	NL	W8 x 28	D759
		10K1	2.5				D779
		10K1	2.5				D780
		NS	3.25	LW			D782
		10K1*	3.0	LW			D925
			4.0	NW			
		16K6*	2.5	LW, NW	42	20G@20plf W8 x 28	G701
		16K6	3.5	LW	50.5	NS	G702
			4.5	NW			
		16K6*	2.5	LW, NW	42	NS	G705
		16K6	3.5	LW	50.5	NS	G706
			4.5	NW			
		16K6*	2.5	LW, NW	42	20G@20plf W8 x 28	G708
		NS	2.5		42	W8 x 28	G709
		16K6*	2.5		42	20G@20plf W8 x 24	G801
		12K5	3.5	LW	50.5	NS	G802
			4.5	NW			

APPENDIX A

FLOOR - CEILING ASSEMBLIES WITH SPRAY APPLIED FIRE RESISTIVE MATERIALS

2 Hr.	SAFRM	NS	2.5	LW, NW	NL	W8 x 28	D759
		10K1	2.5				D779
		10K1	2.5				D780
		NS	3.25	LW			D782
		10K1*	3.25	LW			D925
			4.5	NW			
		16K6*	2.5	LW, NW	42	20G@20plf W8 x 28	G701
		16K6	4.0	LW	50.5	NS	G702
			5.25	NW			
		16K6*	2.5	LW,NW	42	NS	G705
		16K6	4.0	LW	50.5	NS	G706
			5.25	NW			
		16K6*	2.5	LW, NW	42	20G@20plf W8 x 28	G708
		NS	2.5		42	W8 x 28	G709
		16K6*	2.5		42	20G@20plf W8 x 24	G801
		12K5	4.0	LW	50.5	NS	G802
			5.25	NW			
3 Hr.	SAFRM	NS	2.5	LW, NW	NL	W8 x 28	D759
		10K1	2.5				D779
		10K1	2.5				D780
		NS	3.25	LW			D782
		10K1*	4.19	LW			D925
			5.25	NW			
		16K6*	NS	LW, NW	42	20G@20plf W8 x 28	G701
		16K6*	2.75		42	NS	G705
		16K6*	2.75		42	20G@20plf W8 x 28	G708
		NS	2.75		42	W8 x 28	G709
		16K6*	2.75		42	20G@20plf W8 x 24	G801
4 Hr.	SAFRM	10K1	2.5	LW, NW	NL	W8 x 28	D779
		NS	3.25	LW			D782

*** Special Area Requirements**

APPENDIX A

ROOF - CEILING ASSEMBLIES WITH MEMBRANE PROTECTION

Restrained Assembly Rating	Protection Material	Minimum Joist Size	Built Up Roof		Maximum Joist Spacing (in.)	Minimum Primary Support Member	UL Design Number
			Deck Material Description	Insulation			
1 Hr.	Exposed Grid	12K1	22 MSG Min.	Fiber Board	84	W8 x 17	P201
		10K1	26 MSG Min.		48	W6 x 12	P202
		10K1	26 MSG Min.		48	20G@13plf	P211
		12K3	28 MSG Min.		72	20G@13plf W8 x 17	P214
		12K1	26 MSG Min.		72	20G@13plf W6 x 12	P225
		12K3	24 MSG Min.	Building Units	48	NS	P227
		12K3	26 MSG Min.	Fiber Board	72	20G@13plf W6 x 12	P230
		12K1	26 MSG Min.	Insulating Concrete	48	20G@14plf* W8 x 15	P231
		12K3	24 MSG Min.	Foamed Plastic	72	W8 x 15	P235
		10K1	28 MSG Min.	Insulating Concrete	72	20G@13plf W8 x 15	P246
		12K5	26 MSG Min.	Fiber Board	48	W6 x 12	P250
		12K1	28 MSG Min.	Insulating Concrete	72	20G@13plf W6 x 12	P251
		10K1	22 MSG Min.	Fiber Board	72	W6 x 12	P254
		10K1	28 MSG Min.	Insulating Concrete	72	W8 x 15	P255
		10K1	24 MSG Min.	Fiber Board	72	NS	P259
		12K1	28 MSG Min.	Insulating Concrete	72	20G@13plf W6 x 12	P261
		12K1	26 MSG Min.	Insulating Concrete	72	W8 x 15	P264
		10K1	Metal Roof Deck Panels	Batts and Blankets	60	NS	P265
		10K1	26 MSG Min.	Fiber Board	48	W6 x 16	P267
		10K1	Metal Roof Deck Panels	Batts and Blankets	60	NS	P268
		12K1	26 MSG Min.	Insulating Concrete	72	20G@14plf* W8 x 15	P269
	Fiber Board	10K1	24 MSG Min.	Fiber Board	NS	W6 x 16	P301
		10K1	22 MSG Min.		48	NS	P302
		10K1	22 MSG Min.		NS	W6 x 16	P303
	Gypsum Board	12K3	26 MSG Min.	Insulating Concrete	60	W8 x 24	P509
		12K3	24 MSG Min.	Fiber Board	72	20G@13plf	P510

APPENDIX A

ROOF - CEILING ASSEMBLIES WITH MEMBRANE PROTECTION

						W8 x 13	
		10K1	22 MSG Min.	Fiber Board	72	20G@13plf	P514
		10K1	20 MSG Min.	Fiber Board	48	NS	P519
1 1/2 Hr.	Exposed Grid	12K1	26 MSG Min.	Fiber Board	72	20G@13plf W6 x 12	P225
		12K3	24 MSG Min.	Building Units	48	NS	P227
		12K3	26 MSG Min.	Fiber Board	48	20G@13plf W6 x 12	P230
		12K1	26 MSG Min.	Insulating Concrete	48	20G@14plf* W8 x 24	P231
		12K5	26 MSG Min.	Fiber Board	48	W6 x 12	P250
		12K1	28 MSG Min.	Insulating Concrete	72	20G@13plf W6 x 12	P251
		10K1	24 MSG Min.	Fiber Board	72	NS	P259
		10K1	Metal Roof Deck Panels	Batts and Blankets	60	NS	P265
		10K1	20 MSG Min.	Fiber Board	48	NS	P266
		10K1	Metal Roof Deck Panels	Batts and Blankets	60	NS	P268
		12K1	26 MSG Min.	Insulating Concrete	72	20G@14plf* W8 x 24	P269
	Fiber Board	10K1	24 MSG Min.	Fiber Board	NS	W6 x 16	P301
	Metal Lath	12K5	22 MSG Min.	Fiber Board	72	NS	P404
	Gypsum Board	12K3	24 MSG Min.	Fiber Board	72	20G@13plf W8 x 13	P510
2 Hr.	Exposed Grid	10K1	24 MSG Min.	Fiber Board	72	W6 x 12	P237
		12K1	28 MSG Min.	Insulating Concrete	72	20G@13plf W6 x 12	P251
		10K1	20 MSG Min.	Fiber Board	48	NS	P266
	Fiber Board	10K1	24 MSG Min.	Fiber Board	NS	W6 x 16	P301
	Metal Lath	12K5	22 MSG Min.	Fiber Board	72	NS	P404
	Gypsum Board	10K1	22 MSG Min.	Fiber Board	72	20G@13plf	P514
			20 MSG Min.		48	NS	P519
		14K1	26 MSG Min.	Insulating Concrete	66	NS	P520
3 Hr.	Metal Lath	10K1	28 MSG Min.	Insulating Concrete	48	NS	P405

*Special Area Requirements

APPENDIX A

ROOF - CEILING ASSEMBLIES WITH SPRAY APPLIED FIRE RESISTIVE MATERIALS

Restrained Assembly Rating	Protection Material	Minimum Joist Size	Built Up Roof		Maximum Joist Spacing (in.)	Minimum Primary Support Member	UL Design Number
			Deck Material Description	Insulation			
1 Hr.	SAFRM	10K1	22 MSG Min.	Building Units	NS	NS	P822
		12K3	22 MSG Min.	Fiber Board	NS	W8 x 20	P824
1 Hr. and 1-1/2 Hr.	SAFRM	12K5	28 MSG Min.	Insulating Concrete	96	W6 x 16	P919
1-1/2 Hr. and 2 Hr.	SAFRM	10K1	22 MSG Min.	Building Units	NS	W6 x 16	P728
1 Hr., 1-1/2 Hr. and 2 Hr.	SAFRM	14K4	22 MSG Min.	Fiber Board	NS	20G@13plf W6 x 16	P701
		14K4	22 MSG Min.	Fiber Board	NS	20G@13plf W6 x 16	P711
		12K3	22 MSG Min.	Foamed Plastic	NS	W6 x 16	P717
		10K1	22 MSG Min.	Foamed Plastic	NS	20G@13plf W8 x 28	P725
		10K1	22 MSG Min.	Fiber Board	NS	20G@13plf W6 x 16	P726
		14K4	22 MSG Min.	Fiber Board	NS	20G@13plf W6 x 16	P734
		14K4	22 MSG Min.	Fiber Board	NS	20G@13plf W6 x 16	P736
		10K1	22 MSG Min.	Foamed Plastic	NS	W6 x 16	P739
		10K1	22 MSG Min.	Fiber Board	NS	W6 x 16	P740
		10K1	22 MSG Min.	Foamed Plastic	NS	W6 x 16	P743
		12K3	22 MSG Min.	Fiber Board	NS	20G@13plf W6 x 16	P801
		10K1	22 MSG Min.	Fiber Board	NS	20G@13plf W6 x 16	P815
		10K1	22 MSG Min.	Fiber Board	NS	W6 x 16	P816
		10K1	22 MSG Min.	Foamed Plastic	NS	W6 x 16	P819
		10K1	22 MSG Min.	Foamed Plastic	NS	W6 x 16	P825
		10K1	22 MSG Min.	Foamed Plastic	NS	W6 x 16	P827
		12K1	22 MSG Min.	Fiber Board	NS	20G@13plf W8 x 20	P828
		10K1	28 MSG Min.	Insulating Concrete	NS	20G@13plf W8 x 10	P902

APPENDIX A

ROOF - CEILING ASSEMBLIES WITH SPRAY APPLIED FIRE RESISTIVE MATERIALS

		10K1	28 MSG Min.	Insulating Concrete	NS	W8 x 10	P907
		10K1	28 MSG Min.	Insulating Concrete	NS	20G@13plf W8 x 10	P908
		10K1	28 MSG Min.	Insulating Concrete	NS	W8 x 10	P920
		12K5	28 MSG Min.	Insulating Concrete	NS	20G@13plf W8 x 10	P921
		10K1	28 MSG Min.	Insulating Concrete	NS	W6 x 16	P922
		10K1	28 MSG Min.	Insulating Concrete	NS	20G@13plf W8 x 10	P923
		10K1	28 MSG Min.	Insulating Concrete	NS	20G@13plf W8 x 10	P925
		12K5	28 MSG Min.	Insulating Concrete	NS	W8 x 10	P926
		14K4	28 MSG Min.	Insulating Concrete	NS	20G@13plf W8 x 10	P927
		12K5	28 MSG Min.	Insulating Concrete	NS	20G@13plf W8 x 10	P928
		12K3	28 MSG Min.	Insulating Concrete	NS	20G@13plf W8 x 10	P929
		10K1	28 MSG Min.	Insulating Concrete	NS	W6 x 16	P936
2 Hr.	SAFRM	12K3	22 MSG Min.	Foamed Plastic	NS	W6 x 16	P718
		12K3	22 MSG Min.	Foamed Plastic	NS	20G@13plf W6 x 16	P720
		12K3	22 MSG Min.	Foamed Plastic	NS	W6 x 16	P729
1 Hr., 1-1/2 Hr. 2 Hr. and 3 Hr.	SAFRM	10K1	22 MSG Min.	Foamed Plastic	NS	20G@13plf W6 x 16	P719
		10K1	22 MSG Min.	Foamed Plastic	NS	W6 x 16	P722
		10K1	22 MSG Min.	Foamed Plastic	NS	W6 x 16	P723
		10K1	22 MSG Min.	Foamed Plastic	NS	W8 x 28	P732
		10K1*,16K2	22 MSG Min.	Foamed Plastic	NS	W6 x 16	P733
		10K1*	22 MSG Min.	Foamed Plastic	NS	W6 x 16	P826

*** Special Area Requirements**

APPENDIX B

BAY LENGTH, OSHA ERECTION STANDARDS, BRIDGING ILLUSTRATIONS

BAY LENGTH DEFINITIONS

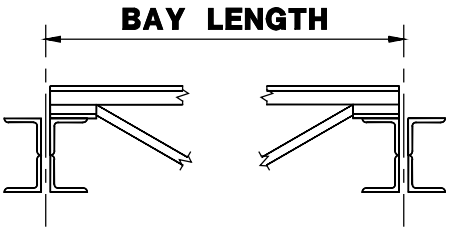

JOIST GIRDERS

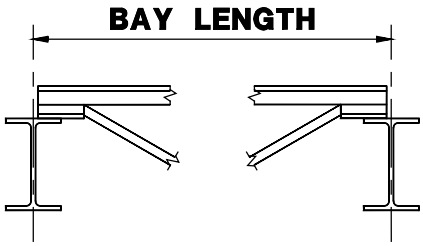

STEEL BEAM

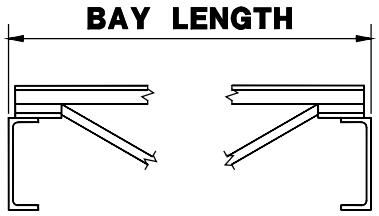

STEEL CHANNEL

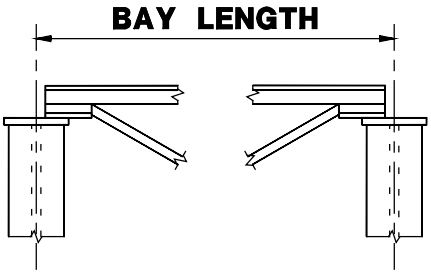

STEEL COLUMN

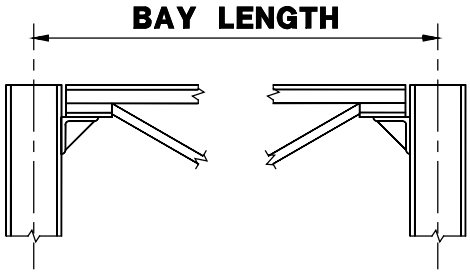

STEEL COLUMN

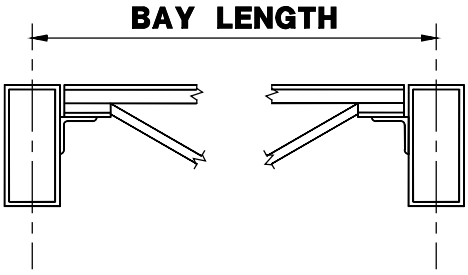

STEEL TUBE

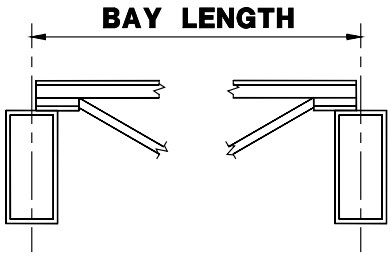

STEEL TUBE

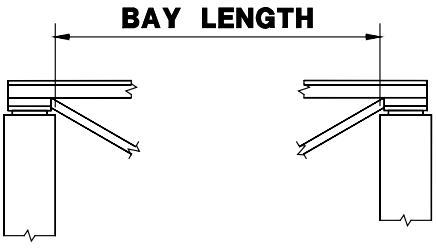

MASONRY OR TILT-UP

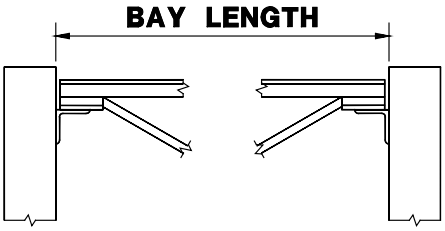

MASONRY OR TILT-UP

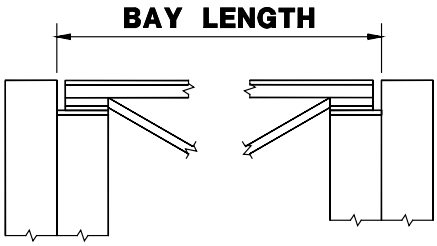

MASONRY WITH PILASTER

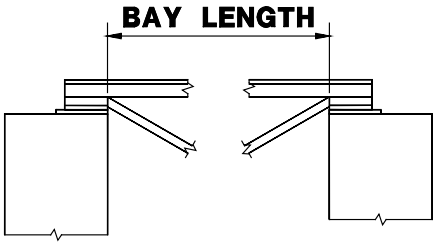

MASONRY OR TILT-UP

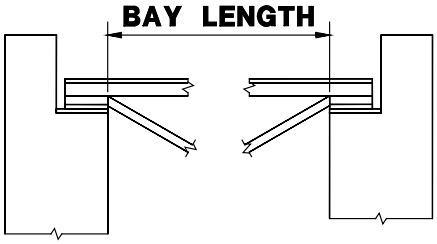

MASONRY OR TILT-UP

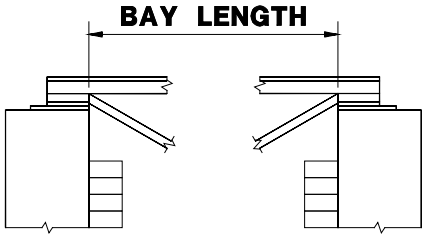

MASONRY WITH FACE BRICK

APPENDIX B

OSHA STEEL ERECTION STANDARD
PARTS §1926.751 AND §1926.757 OPEN WEB STEEL JOISTS

§1926.751 Definitions.

Anchored bridging means that the steel joist bridging is connected to a bridging terminus point.

Bolted diagonal bridging means diagonal bridging that is bolted to a steel joist or joists.

Bridging clip means a device that is attached to the steel joist to allow the bolting of the bridging to the steel joist.

Bridging terminus point means a wall, a beam, tandem joists (with all bridging installed and a horizontal truss in the plane of the top chord) or other element at an end or intermediate point(s) of a line of bridging that provides an anchor point for the steel joist bridging.

Column means a load-carrying vertical member that is part of the primary skeletal framing system. Columns do not include posts.

Constructability means the ability to erect structural steel members in accordance with subpart R without having to alter the over-all structural design.

Construction load (for joist erection) means any load other than the weight of the employee(s), the joists and the bridging bundle.

Erection bridging means the bolted diagonal bridging that is required to be installed prior to releasing the hoisting cables from the steel joists.

Personal fall arrest system means a system used to arrest an employee in a fall from a working level. A personal fall arrest system consists of an anchorage, connectors, a body harness and may include a lanyard, deceleration device, lifeline, or suitable combination of these. The use of a body belt for fall arrest is prohibited.

Project structural engineer means the registered, licensed professional responsible for the design of structural steel framing and whose seal appears on the structural contract documents.

Qualified person means one who, by possession of a recognized degree, certificate, or professional standing, or who by extensive knowledge, training, and experience, has successfully demonstrated the ability to solve or resolve problems relating to the subject matter, the work, or the project.

Steel joist means an open web, secondary load-carrying member of 144 feet (43.9 m) or less, designed by the manufacturer, used for the support of floors and roofs. This does not include structural steel trusses or cold-formed joists.

Steel joist girder means an open web, primary load-carrying member, designed by the manufacturer, used for the support of floors and roofs. This does not include structural steel trusses.

Structural steel means a steel member, or a member made of a substitute material (such as, but not limited to, fiberglass, aluminum or composite members). These members include, but are not limited to, steel joists, joist girders, purlins, columns, beams, trusses, splices, seats, metal decking, girts, and all bridging, and cold formed metal framing which is integrated with the structural steel framing of a building.

§ 1926.757 Open web steel joists.

(a) General.

(1) Except as provided in paragraph (a)(2) of this section, where steel joists are used and columns are not framed in at least two directions with solid web structural steel members, a steel joist shall be field-bolted at the column to provide lateral stability to the column during erection. For the installation of this joist:

(i) A vertical stabilizer plate shall be provided on each column for steel joists. The plate shall be a minimum of 6 inch by 6 inch (152 mm by 152 mm) and shall extend at least 3 inches (76 mm) below the bottom chord of the joist with a 13 /16 inch (21 mm) hole to provide an attachment point for guying or plumbing cables.

(ii) The bottom chords of steel joists at columns shall be stabilized to prevent rotation during erection.

(iii) Hoisting cables shall not be released until the seat at each end of the steel joist is field-bolted, and each end of the bottom chord is restrained by the column stabilizer plate.

(2) Where constructability does not allow a steel joist to be installed at the column:

i. an alternate means of stabilizing joists shall be installed on both sides near the column and shall:

(A) provide stability equivalent to paragraph (a)(1) of this section;

(B) be designed by a qualified person;

(C) be shop installed; and

(D) be included in the erection drawings.

ii. hoisting cables shall not be released until the seat at each end of the steel joist is field-bolted and the joist is stabilized.

(3) Where steel joists at or near columns span 60 feet (18.3 m) or less, the joist shall be designed with sufficient strength to allow one employee to release the hoisting cable without the need for erection bridging.

SJI User Note: See OSHA Directive number CPL-02-01-040 below for alternate compliance methods.

(4) Where steel joists at or near columns span more than 60 feet (18.3m), the joists shall be set in tandem with all bridging installed unless an alternative method of erection, which provides equivalent stability to the steel joist, is designed by a qualified person and is included in the site-specific erection plan.

(5) A steel joist or steel joist girder shall not be placed on any support structure unless such structure is stabilized.

(6) When steel joist(s) are landed on a structure, they shall be secured to prevent unintentional displacement prior to installation.

(7) No modification that affects the strength of a steel joist or steel joist girder shall be made without the approval of the project structural engineer of record.

(8) Field-bolted joists.

(i) Except for steel joists that have been pre assembled into panels, connections of individual steel joists to steel structures in bays of 40 feet (12.2 m) or more shall be fabricated to allow for field bolting during erection.

(ii) These connections shall be field-bolted unless constructability does not allow.

(9) Steel joists and steel joist girders shall not be used as anchorage points for a fall arrest system unless written approval to do so is obtained from a qualified person.

(10) A bridging terminus point shall be established before bridging is installed.

(b) Attachment of steel joists and steel joist girders.

(1) Each end of ‘‘K’’ series steel joists shall be attached to the support structure with a minimum of two 1 /8 -inch (3 mm) fillet welds 1 inch (25 mm) long or with two 1 /2 -inch (13 mm) bolts, or the equivalent.

SJI User Note: For a welded K-series connection, the SJI Specification requires a minimum final length of 2-1/2 inches.

(2) Each end of ‘‘LH’’ and ‘‘DLH’’ series steel joists and steel joist girders shall be attached to the support structure with a minimum of two 1 /4 –inch (6 mm) fillet welds 2 inches (51 mm) long, or with two 3 /4 -inch (19 mm) bolts, or the equivalent.

(3) Except as provided in paragraph (b)(4) of this section, each steel joist shall be attached to the support structure, at least at one end on both sides of the seat, immediately upon placement in the final erection position and before additional joists are placed.

(4) Panels that have been pre-assembled from steel joists with bridging shall be attached to the structure at each corner before the hoisting cables are released.

(c) Erection of steel joists.

(1) Both sides of the seat of one end of each steel joist that requires bridging under Tables A and B shall be attached to the support structure before hoisting cables are released.

(2) For joists over 60 feet, both ends of the joist shall be attached as specified in paragraph (b) of this section and the provisions of paragraph (d) of this section met before the hoisting cables are released.

(3) On steel joists that do not require erection bridging under Tables A and B, only one employee shall be allowed on the joist until all bridging is installed and anchored.

► TABLE **A**.—ERECTION BRIDGING FOR SHORT SPAN JOISTS

Joist	Span
10K1	NM
12K1	23–0
12K3	NM
12K5	NM
14K1	27–0
14K3	NM
14K4	NM
14K6	NM
16K2	29–0
16K3	30–0
16K4	32–0
16K5	32–0
16K6	NM
16K7	NM
16K9	NM
18K3	31–0
18K4	32–0
18K5	33–0
18K6	35–0
18K7	NM
18K9	NM
18K10	NM
20K3	32–0
20K4	34–0
20K5	34–0
20K6	36–0
20K7	39–0
20K9	39–0
20K10	NM
22K4	34–0
22K5	35–0
22K6	36–0
22K7	40–0
22K9	40–0
22K10	NM
22K11	NM
24K4	36–0
24K5	38–0
24K6	39–0
24K7	43–0
24K8	43–0
24K9	44–0
24K10	NM
24K12	NM
26K5	38–0
26K6	39–0
26K7	43–0
26K8	44–0
26K9	44-0
26K10	49–0
26K12	NM
28K6	40–0
28K7	43–0
28K8	44–0
28K9	45–0
28K10	49–0
28K12	53–0
30K7	44–0
30K8	45–0
30K9	45–0
30K10	50–0
30K11	52–0
30K12	54–0

NM = diagonal bolted bridging not mandatory

► TABLE A.—ERECTION BRIDGING FOR SHORT SPAN JOISTS-[Continued]

Joist	Span
10KCS1	NM
10KCS2	NM
10KCS3	NM
12KCS1	NM
12KCS2	NM
12KCS3	NM
14KCS1	NM
14KCS2	NM
14KCS3	NM
16KCS2	NM
16KCS3	NM
16KCS4	NM
16KCS5	NM
18KCS2	35–0
18KCS3	NM
18KCS4	NM
18KCS5	NM
20KCS2	36–0
20KCS3	39–0
20KCS4	NM
20KCS5	NM
22KCS2	36–0
22KCS3	40–0
22KCS4	NM
22KCS5	NM
24KCS2	39–0
24KCS3	44–0
24KCS4	NM
24KCS5	NM
26KCS2	39–0
26KCS3	44–0
26KCS4	NM
26KCS5	NM
28KCS2	40–0
28KCS3	45–0
28KCS4	53–0
28KCS5	53–0
30KCS3	45–0
30KCS4	54–0
30KCS5	54–0

NM = diagonal bolted bridging not mandatory

► TABLE B.—ERECTION BRIDGING FOR LONG SPAN JOISTS

Joist	Span
18LH02	33–0
18LH03	NM.
18LH04	NM.
18LH05	NM.
18LH06	NM.
18LH07	NM.
18LH08	NM.
18LH09	NM.
20LH02	33–0
20LH03	38–0
20LH04	NM.
20LH05	NM.
20LH06	NM.
20LH07	NM.
20LH08	NM.
20LH09	NM.
20LH10	NM.
24LH03	35–0
24LH04	39–0
24LH05	40–0
24LH06	45–0
24LH07	NM.
24LH08	NM.
24LH09	NM.
24LH10	NM.
24LH11	NM.
28LH05	42–0
28LH06	46-0
28LH07	54-0
28LH08	54-0
28LH09	NM.
28LH10	NM.
28LH11	NM.
28LH12	NM.
28LH13	NM.
32LH06	47–0 through 60–0
32LH07	47–0 through 60–0
32LH08	55–0 through 60–0
32LH09	NM through 60–0
32LH10	NM through 60–0
32LH11	NM through 60–0
32LH12	NM through 60–0
32LH13	NM through 60–0
32LH14	NM through 60–0
32LH15	NM through 60–0
36LH07	47–0 through 60–0
36LH08	47–0 through 60–0
36LH09	57–0 through 60–0
36LH10	NM through 60–0
36LH11	NM through 60–0
36LH12	NM through 60–0
36LH13	NM through 60–0
36LH14	NM through 60–0
36LH15	NM through 60–0

NM = diagonal bolted bridging not mandatory

(4) Employees shall not be allowed on steel joists where the span of the steel joist is equal to or greater than the span shown in Tables A and B except in accordance with § 1926.757(d).

(5) When permanent bridging terminus points cannot be used during erection, additional temporary bridging terminus points are required to provide stability.

(d) Erection bridging.

(1) Where the span of the steel joist is equal to or greater than the span shown in Tables A and B, the following shall apply:
   i. A row of bolted diagonal erection bridging shall be installed near the midspan of the steel joist;
   ii. Hoisting cables shall not be released until this bolted diagonal erection bridging is installed and anchored; and
   iii. No more than one employee shall be allowed on these spans until all other bridging is installed and anchored.

(2) Where the span of the steel joist is over 60 feet (18.3 m) through 100 feet (30.5 m), the following shall apply:
   i. All rows of bridging shall be bolted diagonal bridging;
   ii. Two rows of bolted diagonal erection bridging shall be installed near the third points of the steel joist;
   iii. Hoisting cables shall not be released until this bolted diagonal erection bridging is installed and anchored; and
   iv. No more than two employees shall be allowed on these spans until all other bridging is installed and anchored.

(3) Where the span of the steel joist is over 100 feet (30.5 m) through 144 feet (43.9 m), the following shall apply:
   i. All rows of bridging shall be bolted diagonal bridging;
   ii. Hoisting cables shall not be released until all bridging is installed and anchored; and
   iii. No more than two employees shall be allowed on these spans until all bridging is installed and anchored.

(4) For steel members spanning over 144 feet (43.9 m), the erection methods used shall be in accordance with § 1926.756.

(5) Where any steel joist specified in paragraphs (c)(2) and (d)(1), (d)(2), and (d)(3) of this section is a bottom chord bearing joist, a row of bolted diagonal bridging shall be provided near the support(s). This bridging shall be installed and anchored before the hoisting cable(s) is released.

(6) When bolted diagonal erection bridging is required by this section, the following shall apply:

i. The bridging shall be indicated on the erection drawing;
ii. The erection drawing shall be the exclusive indicator of the proper placement of this bridging;
iii. Shop-installed bridging clips, or functional equivalents, shall be used where the bridging bolts to the steel joists;
iv. When two pieces of bridging are attached to the steel joist by a common bolt, the nut that secures the first piece of bridging shall not be removed from the bolt for the attachment of the second; and
v. Bridging attachments shall not protrude above the top chord of the steel joist.

(e) Landing and placing loads.

(1) During the construction period, the employer placing a load on steel joists shall ensure that the load is distributed so as not to exceed the carrying capacity of any steel joist.

(2) Except for paragraph (e)(4) of this section, no construction loads are allowed on the steel joists until all bridging is installed and anchored and all joist-bearing ends are attached.

(3) The weight of a bundle of joist bridging shall not exceed a total of 1,000 pounds (454 kg). A bundle of joist bridging shall be placed on a minimum of three steel joists that are secured at one end. The edge of the bridging bundle shall be positioned within 1 foot (.30 m) of the secured end.

(4) No bundle of decking may be placed on steel joists until all bridging has been installed and anchored and all joist bearing ends attached, unless all of the following conditions are met:
(i) The employer has first determined from a qualified person and documented in a site-specific erection plan that the structure or portion of the structure is capable of supporting the load;
(ii) The bundle of decking is placed on a minimum of three steel joists;
(iii) The joists supporting the bundle of decking are attached at both ends;
(iv) At least one row of bridging is installed and anchored;
(v) The total weight of the bundle of decking does not exceed 4,000 pounds(1816 kg); and
(vi) Placement of the bundle of decking shall be in accordance with paragraph (e)(5) of this section.

(5) The edge of the construction load shall be placed within 1 foot (.30 m) of the bearing surface of the joist end.

OSHA Directive number CPL 02-01-040

The industry has conducted a number of tests to determine if joists that are now available would meet the requirements of 1926.757(a)(3). Their tests showed that of the joists now available, some would meet the requirement, but only if erectors followed a number of erection criteria that are not in the steel erection standard. Also, for some spans and dimensions, there are still no joists that would meet the requirement (even if those additional criteria were followed). Therefore, the enforcement policy which was set to expire on July 18, 2004, will remain in effect indefinitely. That policy is as follows: for all joists at or near columns that span 60 feet or less, employers will be considered to be in compliance with § 1926.757(a)(3) if they erect these joists either by: (1) installing bridging or otherwise stabilizing the joist prior to releasing the hoisting cable, or (2) releasing the cable without having a worker on the joists.

SJI User Note: While the OSHA directive provides alternates to provision 1926.757(a)(3), SJI member companies do not specifically check or design column joists for self-weight plus the weight of one erector releasing the hoisting cable without any erection bridging; they are NOT designed to satisfy 1926.757(a)(3). The SJI requires that the directive CPL 02-01-040 be followed, and that bridging be installed prior to releasing the hoisting cable or that the hoisting cable be released without walking on the joist. For further information, see Steel Joist Institute Technical Digest No. 9, “Handling and Erection of Steel Joists and Joist Girders”.

APPENDIX B

ILLUSTRATIONS OF OSHA BRIDGING TERMINUS POINTS (NON-MANDATORY)

Guidelines for Complying with OSHA Steel Erection Standard, Paragraph §1926.757(a)(10) and §1926.757(c)(5).

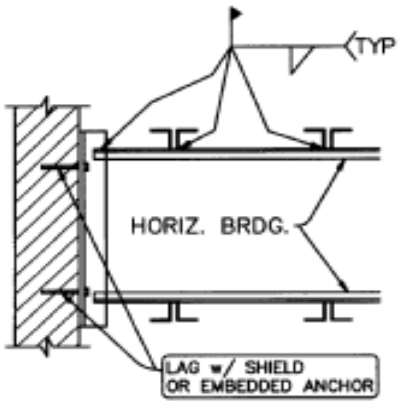

HORIZONTAL BRIDGING
TERMINUS AT WALL

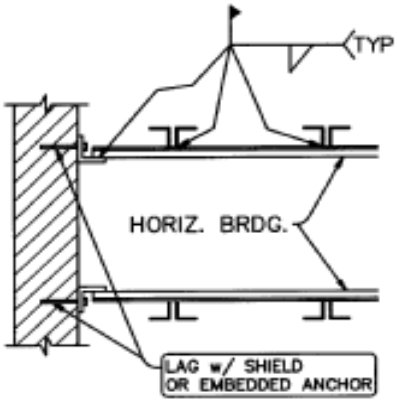

HORIZONTAL BRIDGING
TERMINUS AT WALL

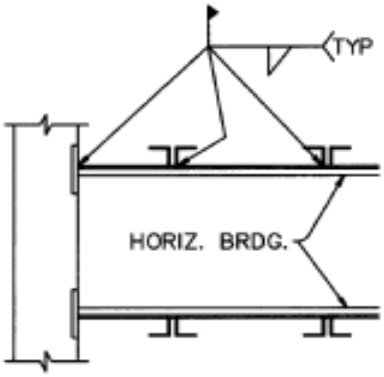

HORIZONTAL BRIDGING
TERMINUS AT PANEL WALL

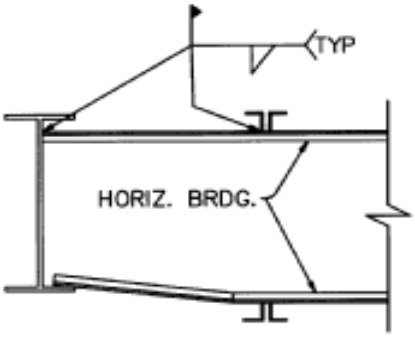

HORIZONTAL BRIDGING
TERMINUS AT
STRUCTURAL SHAPE

APPENDIX B

ILLUSTRATIONS OF OSHA BRIDGING TERMINUS POINTS (NON-MANDATORY)

Guidelines for Complying with OSHA Steel Erection Standard, Paragraph §1926.757(a)(10) and §1926.757(c)(5).

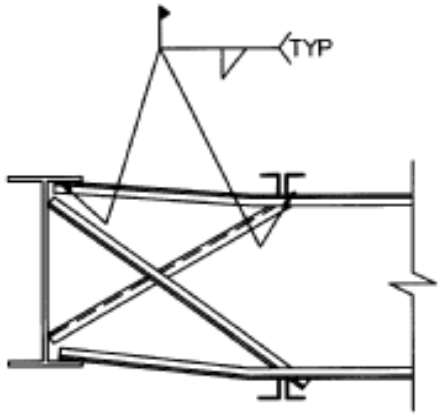

HORIZONTAL BRIDGING TERMINUS AT STRUCTURAL SHAPE WITH OPTIONAL "X-BRIDGING"

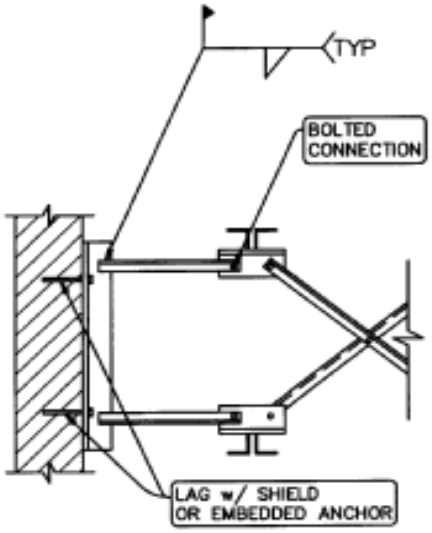

BOLTED DIAGONAL BRIDGING TERMINUS AT WALL

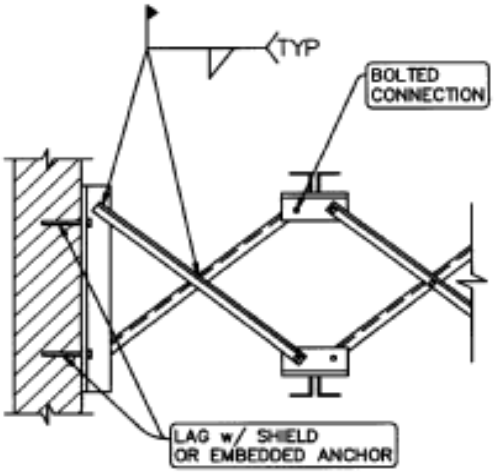

BOLTED DIAGONAL BRIDGING TERMINUS AT WALL

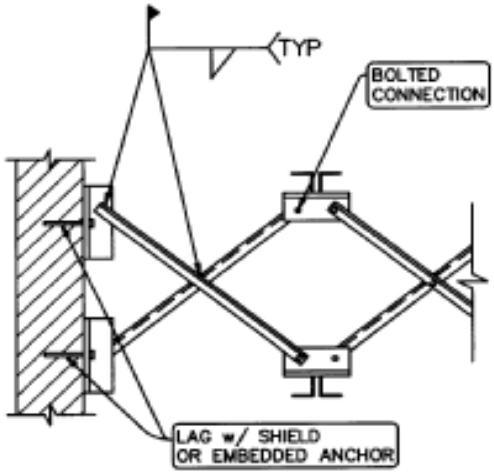

BOLTED DIAGONAL BRIDGING TERMINUS AT WALL

APPENDIX B

ILLUSTRATIONS OF OSHA BRIDGING TERMINUS POINTS (NON-MANDATORY)

Guidelines for Complying with OSHA Steel Erection Standard, Paragraph §1926.757(a)(10) and §1926.757(c)(5).

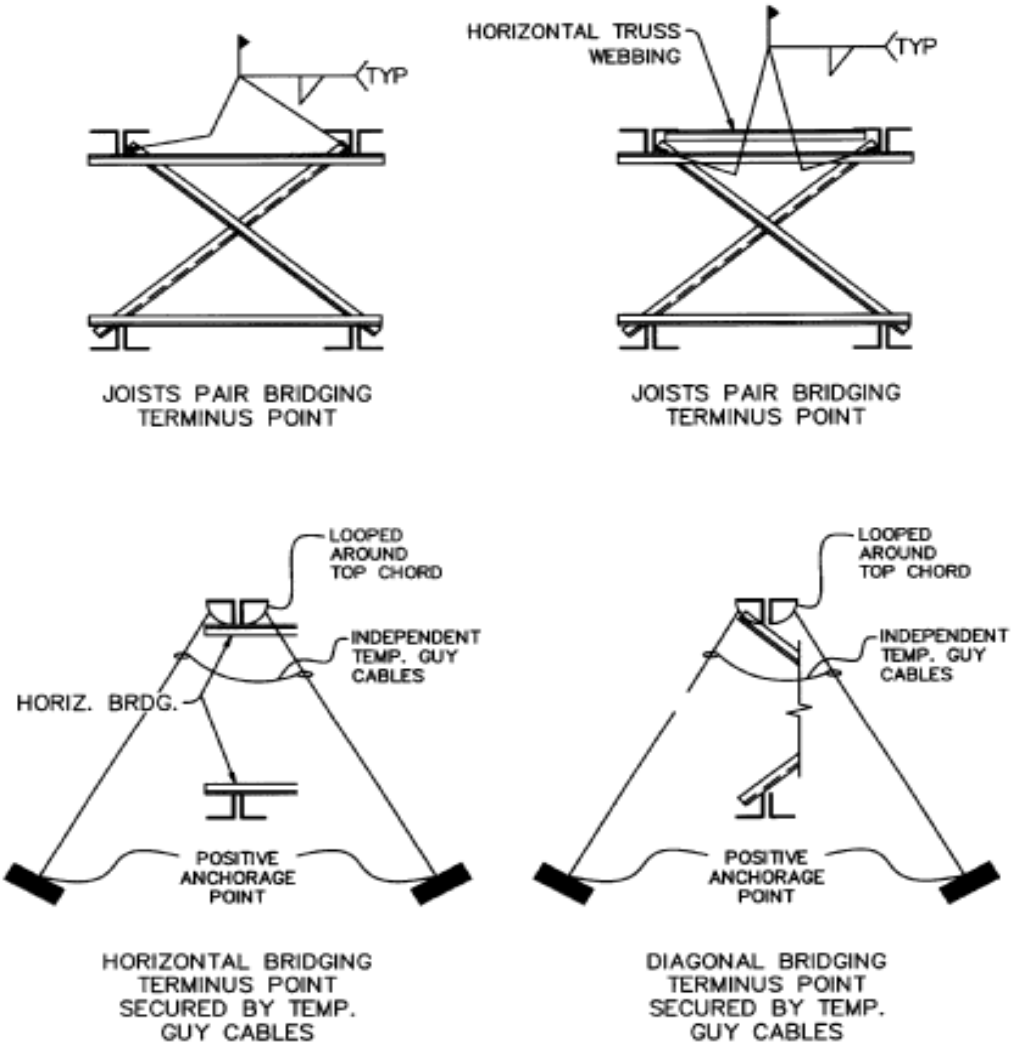

STEEL JOIST INSTITUTE
140 West Evans Street, Suite 203
Florence, SC 29501

Phone: (843) 407-4091 | steeljoist.org

ANSI Accredited Standards Developer